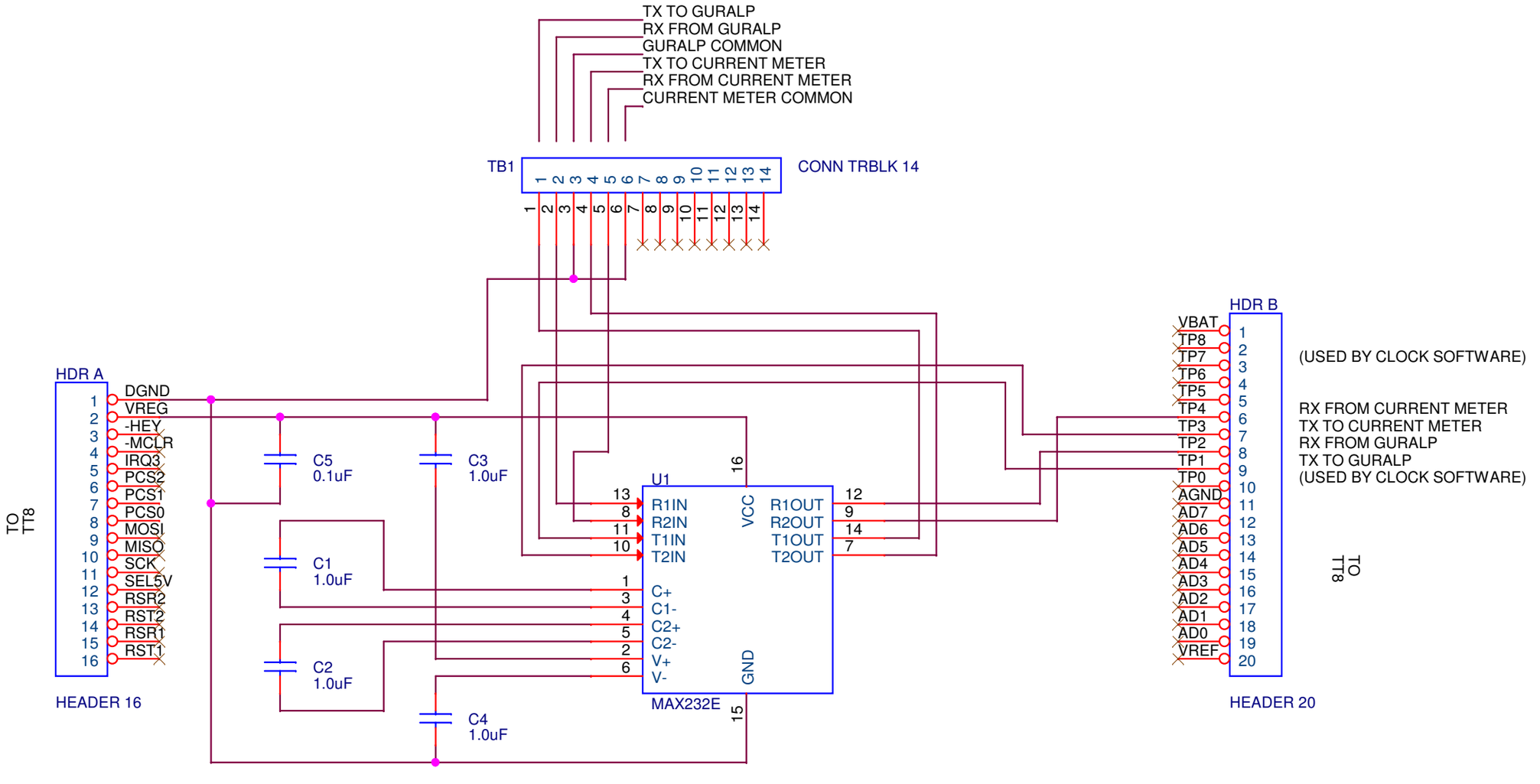

NOTE: CIRCUIT IS BUILT ON AN ONSET IO-8 PROTOTYPING BOARD. SOME IO-8 CONNECTORS HAVE BEEN OMITTED FOR CLARITY.

Engineer: McGill		
Title: Broadband Seismometer: Serial Driver Board		
Size: A	Document Number: 101268	Rev: 1.0.0
Date: Tuesday, October 09, 2007	Sheet 5 of 6	