SIDE VIEW

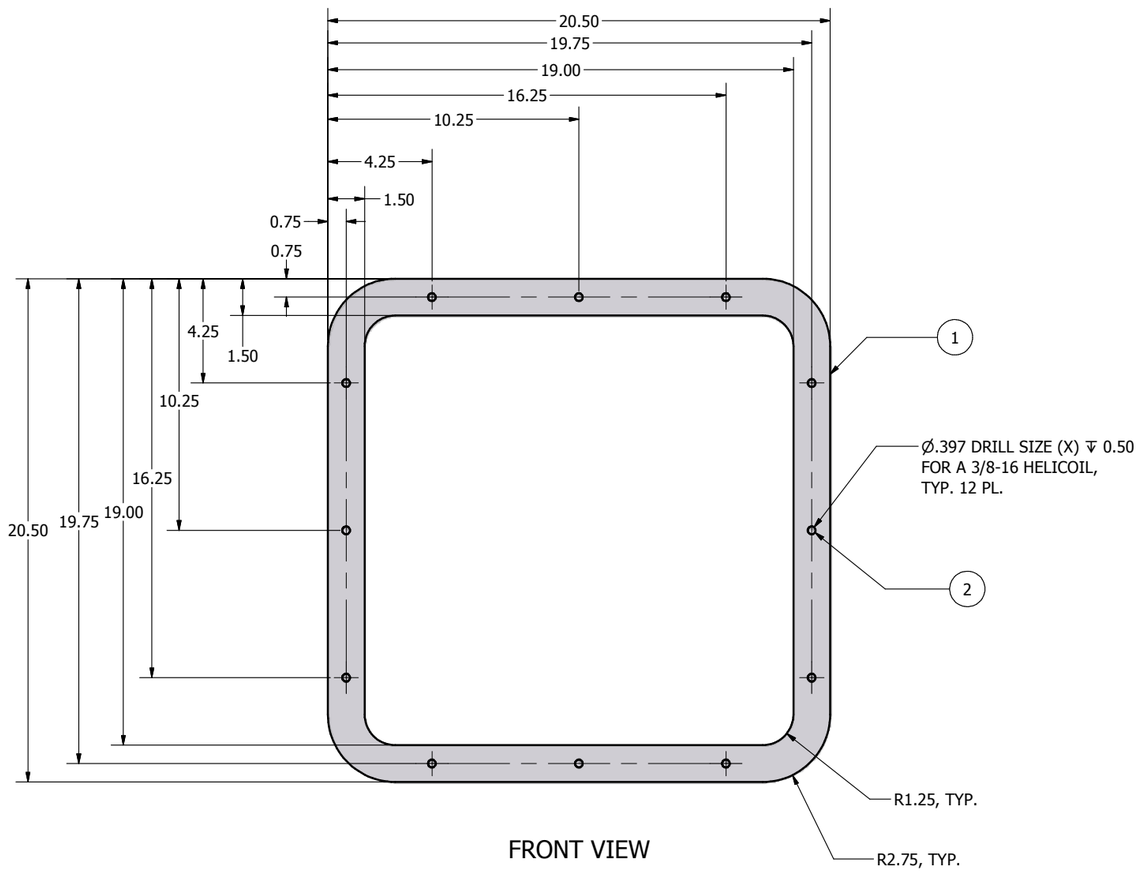


FRONT VIEW

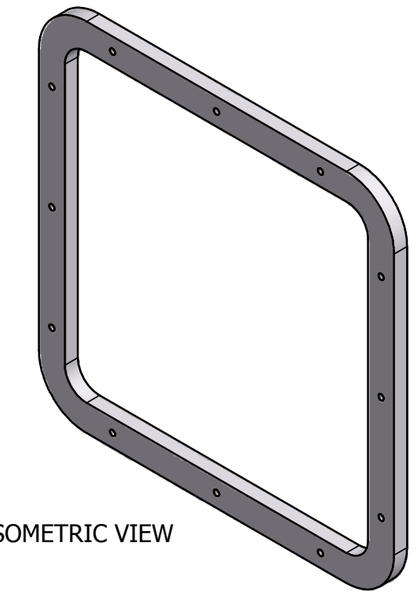

ISOMETRIC VIEW

# LOWER WELL TOP FLANGE -001

| ITEM | QTY | PART NUMBER | CONTROL # | DESCRIPTION |
|---|---|---|---|---|
| 2 | 12 | McMASTER-CARR 91732A376 | 8462 | INSERT, 316 SST, HELICOIL, 3/8"-16 X 0.375" LG |
| 1 | 1 | - | 8411 | PLATE, METAL, ALUMINUM 5086, 0.75 X 20.50 X 20.50 |

Parts List

UNLESS OTHERWISE SPECIFIED:
DIMENSIONS ARE IN INCHES
TOLERANCES
DECIMALS .XX +/- .05 .XXX +/-.010
ANGULAR +/- .5
**DO NOT SCALE DRAWING**

| | | |
|---|---|---|
| DRAWN | chuckc | 10/3/2007 |
| CHECKED | LAST UPDATE (DCJ) | 5/14/2009 |
| QA | | |
| MFG | | |
| APPROVED | | |

**NATIONAL DATA BUOY CENTER**
John C. Stennis Space Center
Stennis Space Center, Mississippi,39529

TITLE
LOWER WELL TOP FLANGE

| SIZE | DWG NO | REV |
|---|---|---|
| C | 02.3F01131 | |

SCALE

SHEET 1 OF 1