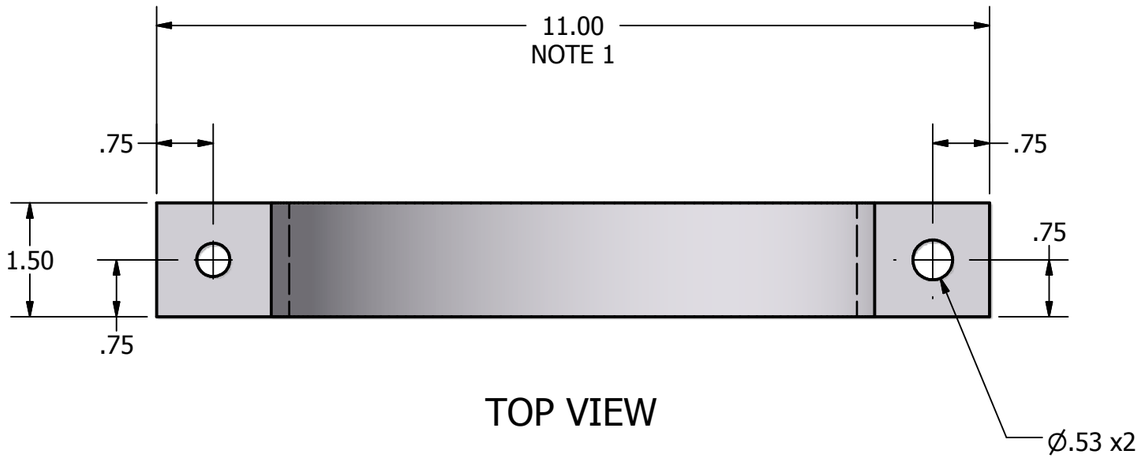

TOP VIEW

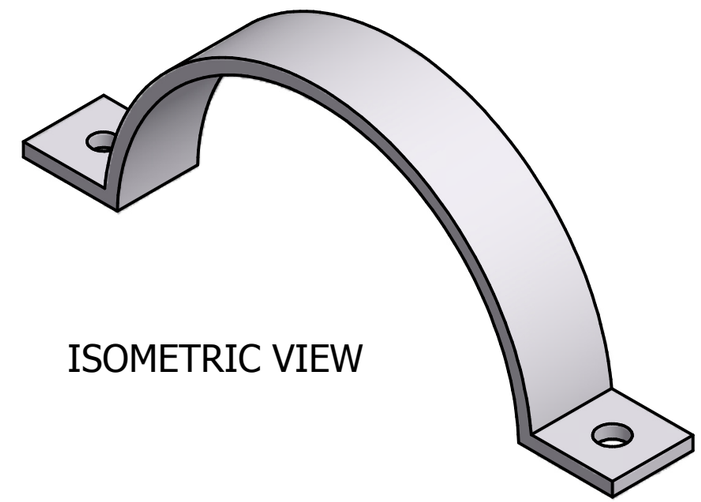

ISOMETRIC VIEW

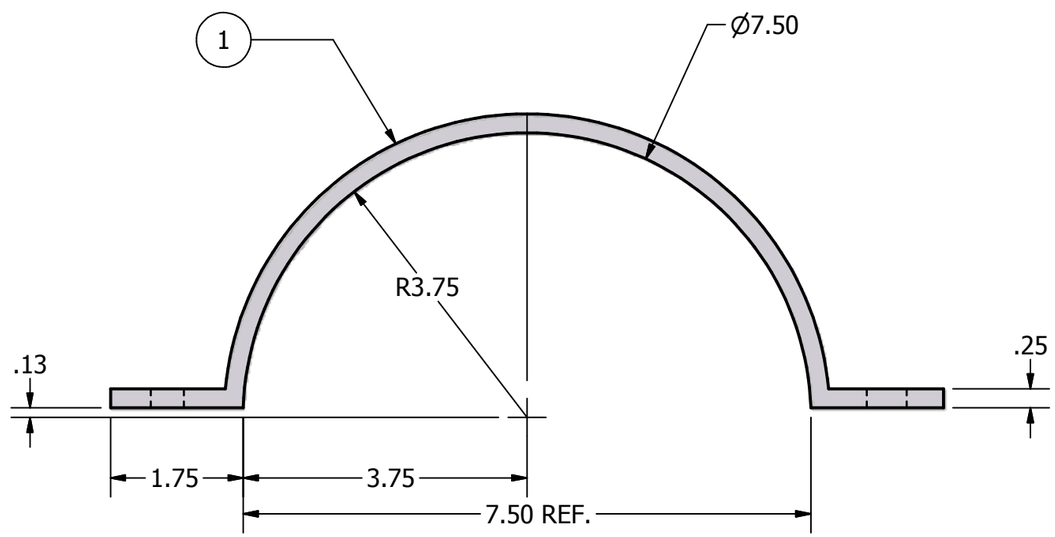

FRONT VIEW

NOTES:
1. UNBENT LENGTH IS 15.275".

UNLESS OTHERWISE SPECIFIED:
DIMENSIONS ARE IN INCHES
TOLERANCES

DECIMALS	ANGULAR
.XX +/- .05	+/- .5
.XXX +/-.010	.

DO NOT SCALE DRAWING

ADCP BRACKET CLAMP -001

ITEM	QTY	PART NUMBER	CONTROL #	DESCRIPTION
1	1	-	6616	PLATE, ALUMINUM 5086, 0.25 X 15.275 X 1.50

Parts List

DRAWN	T. RUTLEDGE	10/17/2007
CHECKED	LAST UPDATE (DCJ)	5/14/2009
QA		
MFG		
APPROVED		

NATIONAL DATA BUOY CENTER
John C. Stennis Space Center
Stennis Space Center, Mississippi,39529

TITLE
ADCP BRACKET CLAMP

SIZE	DWG NO	REV
B	02.3F01148	

SCALE

SHEET 1 OF 1