NOTES:
1. BOLT & EQUIPMENT HOLES SHOWN FOR REFERENCE. FEATURE TO BE CUT OR DRILLED AFTER WELDING PLATES IN THE NEXT ASSEMBLY.

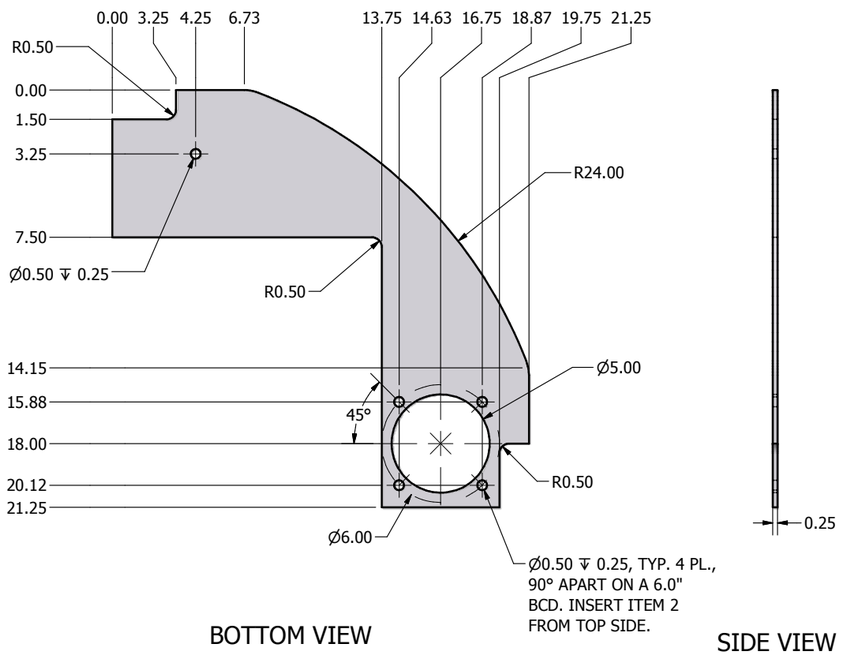

BOTTOM VIEW

SIDE VIEW

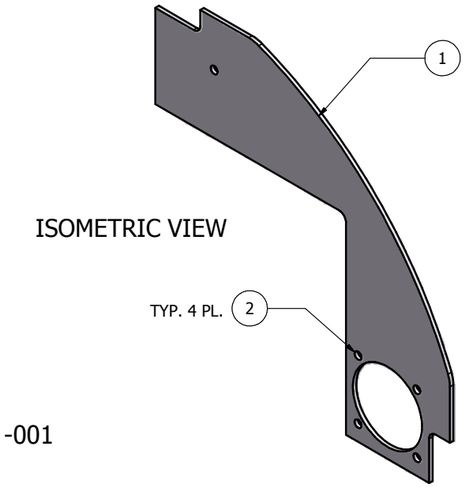

ISOMETRIC VIEW

LOWER FRAME PLATE -001
NUMBER 1

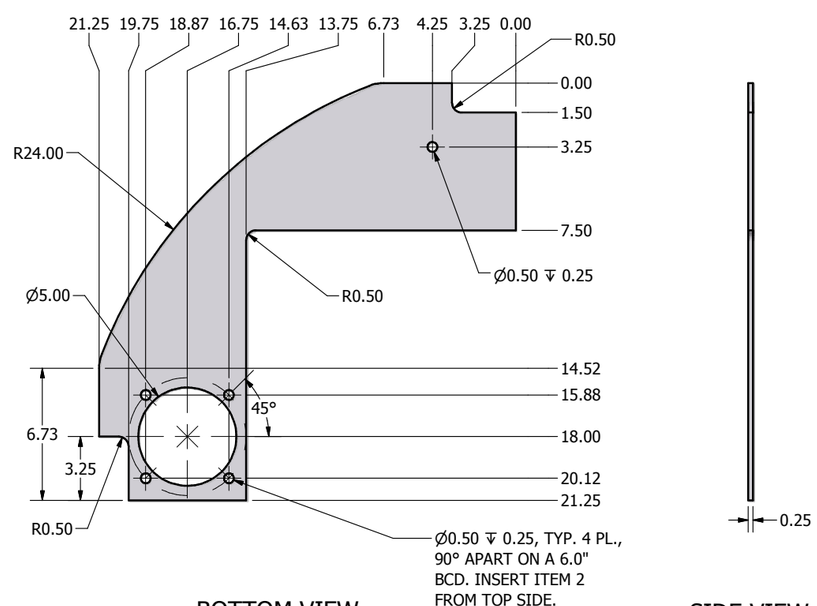

BOTTOM VIEW

SIDE VIEW

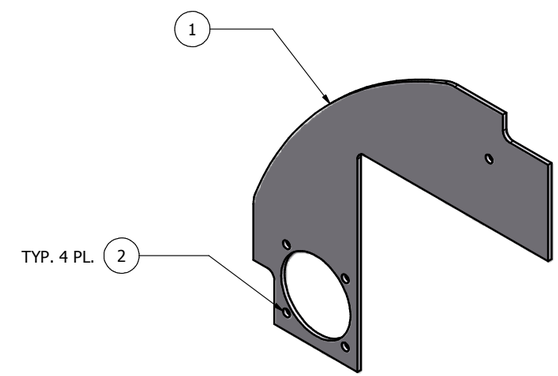

ISOMETRIC VIEW

LOWER FRAME PLATE -002
NUMBER 2

-001 & -002 Parts List

ITEM	QTY	PART NUMBER	CONTROL #	DESCRIPTION
2	4	CENTURY FASTENERS CLS0616-3	2303	NUT, SELF CLINCHING, 316 SST, 0.375-16 X 0.188 (3/8-16 X 3/16)
1	1	-	6616	PLATE, ALUMINUM 5086, 21.25 X 21.25 X 0.25 THK

UNLESS OTHERWISE SPECIFIED:
DIMENSIONS ARE IN INCHES
TOLERANCES
DECIMALS .XX +/- .05 .XXX +/-.010
ANGULAR +/- .5
DO NOT SCALE DRAWING

DRAWN	T. RUTLEDGE	10/3/2007
CHECKED	LAST UPDATE (DCJ)	5/15/2009
QA		
MFG		
APPROVED		

NATIONAL DATA BUOY CENTER
John C. Stennis Space Center
Stennis Space Center, Mississippi,39529

TITLE
LOWER FRAME PLATE

SIZE	DWG NO	REV
C	02.3F01157	

SCALE

SHEET 1 OF 1