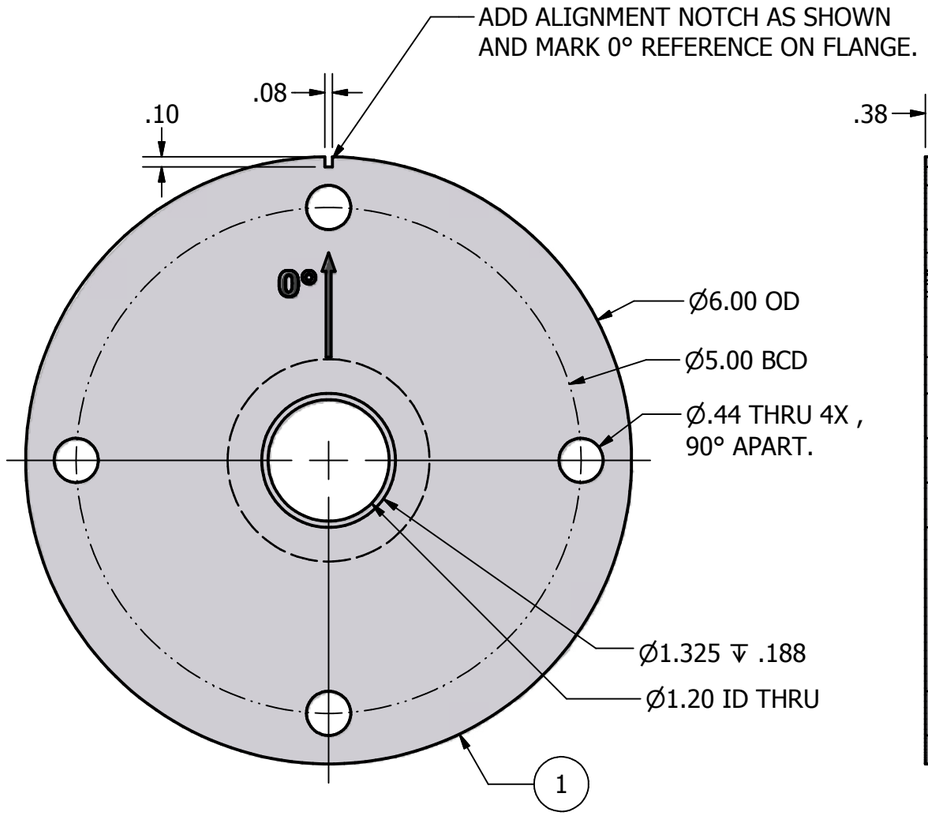

TOP VIEW

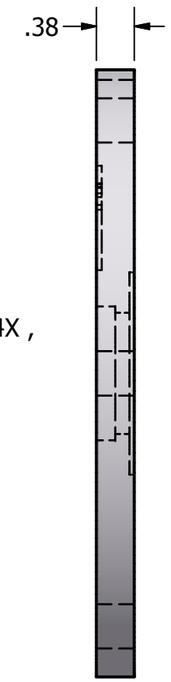

SIDE VIEW

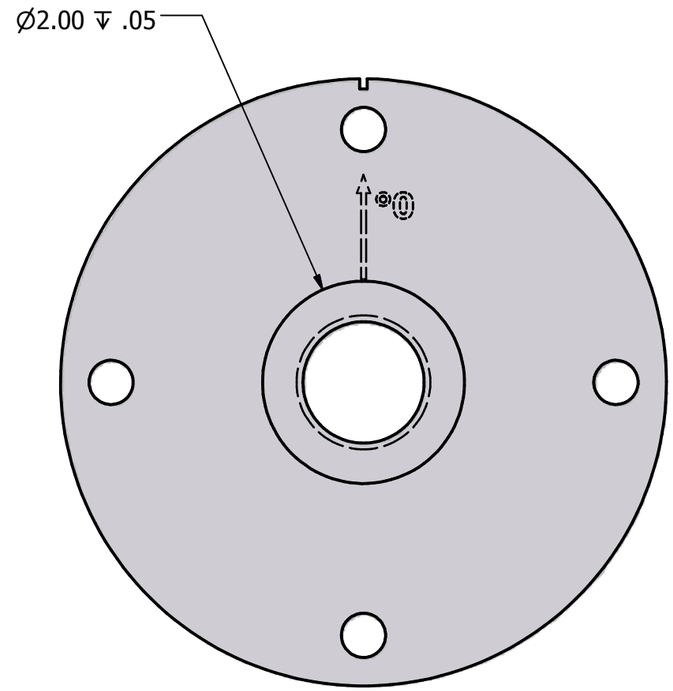

BOTTOM VIEW

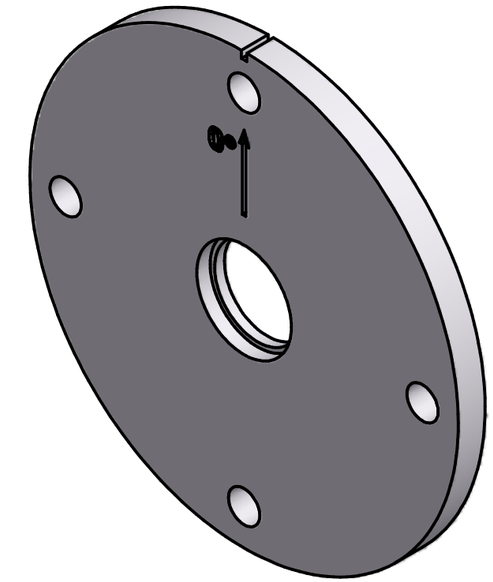

ISOMETRIC VIEW

WIND SENSOR FLANGE -001

ITEM	QTY	PART NUMBER	CONTROL #	DESCRIPTION
1	1	-	613	PLATE, METAL, 0.38 X 6.00 DIA., 6061 ALUM T6

Parts List

UNLESS OTHERWISE SPECIFIED:
DIMENSIONS ARE IN INCHES
TOLERANCES

DECIMALS	ANGULAR
.XX +/- .05	+/- .5
.XXX +/-.010	.

DO NOT SCALE DRAWING

DRAWN	T. RUTLEDGE	10/5/2007
CHECKED	LAST UPDATE (DCJ	6/3/2009
QA		
MFG		
APPROVED		

NATIONAL DATA BUOY CENTER
John C. Stennis Space Center
Stennis Space Center, Mississippi,39529

TITLE

WIND SENSOR FLANGE

SIZE	DWG NO	REV
B	02.3F01271	

SCALE

SHEET 1 OF 1