THIS DRAWING HAS BEEN GENERATED AND IS MAINTAINED BY A CAD SYSTEM. CHANGES SHALL ONLY BE INCORPORATED AS DIRECTED BY THE NDBC ENGINEERING DEPARTMENT.

REVISIONS				
ZONE	LTR	DESCRIPTION	DATE	APPROVED
-	-	--	XX/XX/XX	XX/XX/XX
-	-	--	XX/XX/XX	XX/XX/XX

NOTES:

1. ITEMS 1–4 CAN BE REPLACED WITH A PRE–ASSEMBLED VENDOR PLUG. USE SUBCONN PN TBD OR EQUIVALENT, NDBC CONTROL # 8460(–001), TBD(–002), TBD(–003).

2. USE A BROTHER P–TOUCH LABEL MAKER, MODEL PT–2400 OR EQUIVALENT, TO IDENTIFY CABLES AS SHOWN IN THE LABEL IDENTIFICATION TABLE. APPLY LABELS AS SHOWN IN THE CABLE VIEW.

3. EQUIVALENT SUBSTITUTE CAN BE USED IN PLACE OF SPECIFIED ITEM.

4. PLUG LENGTH CAN BE CHANGED TO ACCOMMODATE MANUFACTURER'S STANDARD PRACTICE.

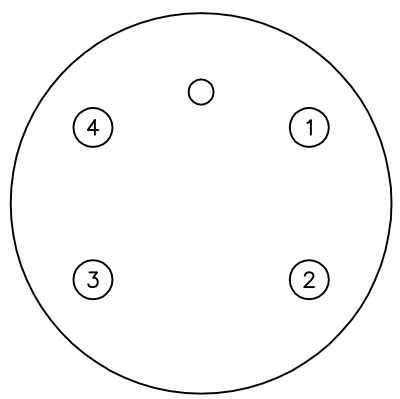

IL4M
FACE VIEW

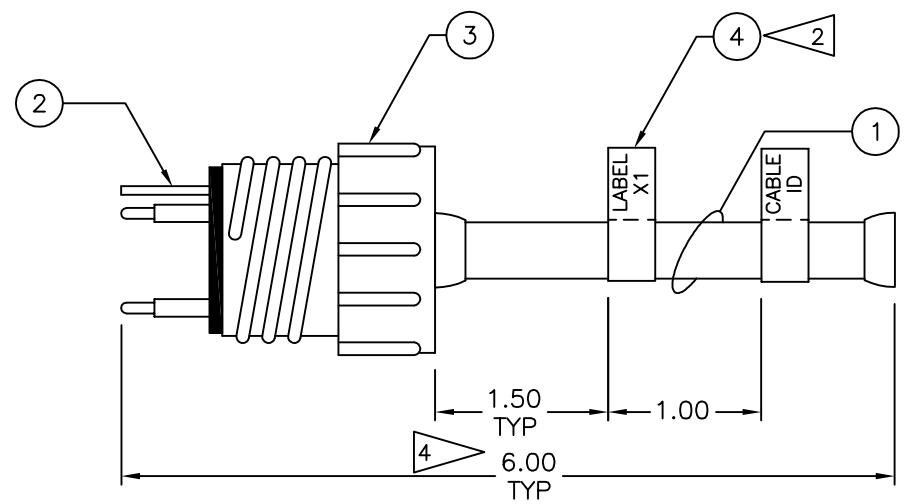

POWER JUMPER PLUG ASSEMBLY –001, –002 & –003

LABEL IDENTIFICATON TABLE	
CABLE ID NUMBER	LABEL X1
02.3F03116–001	AMPS TAO ET P2 PWR JMP
02.3F03116–002	DART ET P1 PWR JMP
02.3F03116–003	GOES ET P4 PWR JMP

P2
AMPS(TAO)
EQUIPMENT TUBE
PWR JUMPER

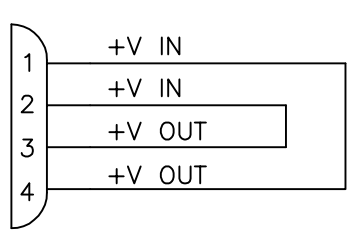

POWER JUMPER PLUG WIRING –001
AMPS (TAO)

P1
DART
EQUIPMENT TUBE
PWR JUMPER

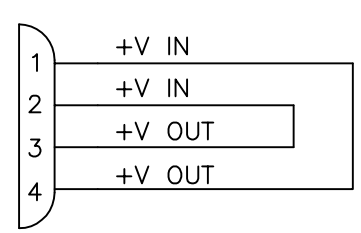

POWER JUMPER PLUG WIRING –002
DART

P4
GOES
EQUIPMENT TUBE
PWR JUMPER

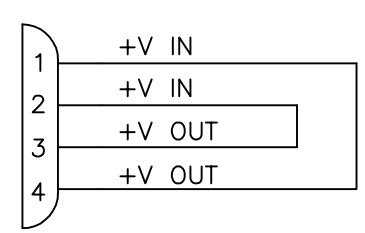

POWER JUMPER PLUG WIRING –003
GOES HDR

–003	–002	–001	NOTES	DESCRIPTION	NDBC CONTROL NO.	MANUFACTURER & PART NUMBER	ZONE (S)	ITEM NO.
AR	AR	AR	2	LABEL TAPE, BLK INK ON WHT, 9mm(3/8"), P–TOUCH TZ LAMINATED TAPE	14177	BROTHER TZ–221	–	4
1	1	1	3	SLEEVE, CONNECTOR LOCKING, MALE, DELRIN, WTH SNAP RING, WETMATE	–	SUBCONN DLSA–M	–	3
1	1	1	3	CONNECTOR, WET MATE 4 CIRCUIT, MALE, CABLE END	–	SUBCONN IL4M	–	2
AR	AR	AR	3	CABLE, 4 CONDUCTOR MIN, 20AWG, POLYURETHANE JACKET	NSN	ALPHA WIRE 25054	–	1

QTY — PARTS LIST

REVISED: 09/30/09
DISCARD ALL PRIOR DWGS

AutoCAD Drawing/Sketch:
Printed Copies May Be Obsolete:
Validate Prior to use.

– NO.	HULL NO.	NEXT ASSY	USED ON
–003	X	X	GOES
–002	X	X	DART
–001	X	X	TAO

APPLICATION

UNLESS OTHERWISE SPECIFIED: DIMENSIONS ARE IN INCHES
TOLERANCES:
DECIMALS .XX ± .05 .XXX ± .010
ANGULAR ± .05
DO NOT SCALE DRAWING

CONFIGURATION MGT. APPROVAL

FINISH

ECP–P00–0000

CONTRACT NO –

APPROVALS	DATE
DRAWN BY D.JAYNES	09/20/07
CHECKED BY –	–
ENGINEER APPROVAL –	–
NDBC PROJ ENGR –	–
APPROVED BY –	–

NATIONAL DATA BUOY CENTER
John C. Stennis Space Center
Stennis Space Center, Mississippi 39529–6000

TITLE
POWER JUMPER PLUG ASSEMBLY
–

SIZE	CAGE CODE	DRAWING NO	REV
D		02.3F03116	–

SCALE 1/1 RELEASE DATE: X SHEET 1 OF 1

PLOTTED ON: 10/1/2009 3:31:08 PM S:\Wb\SK–02.3F0–001 NOOSS OPT–PROD BUOY\AutoCad Buoy & Payload Sys Dwgs\SK02_3F03116.dwg