THIS DRAWING HAS BEEN GENERATED AND IS MAINTAINED BY A CAD SYSTEM. CHANGES SHALL ONLY BE INCORPORATED AS DIRECTED BY THE NDBC ENGINEERING DEPARTMENT.

REVISIONS				
ZONE	LTR	DESCRIPTION	DATE	APPROVED

NOTES:

1. EQUIVALENT SUBSTITUTE CAN BE USED IN PLACE OF SPECIFIED ITEM.

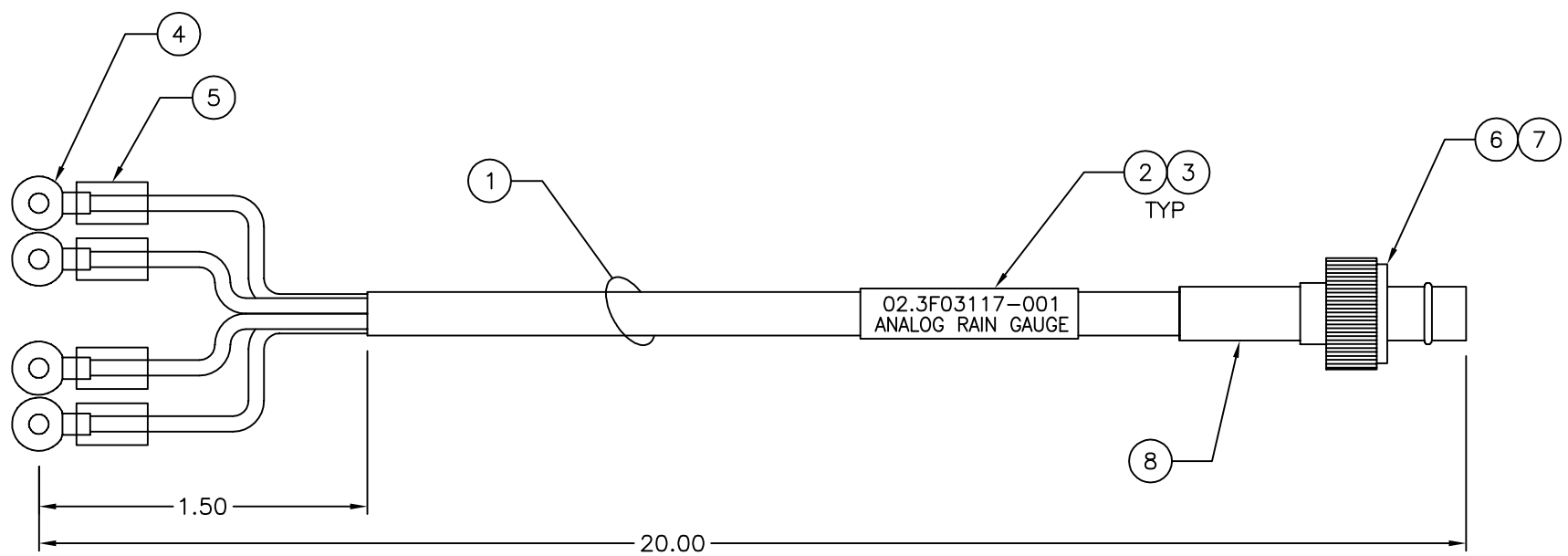

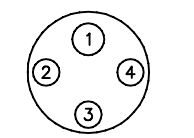

VMG-4-MP WOC
FACE VIEW

ANALOG RAIN GAUGE PIGTAIL ASSEMBLY -001

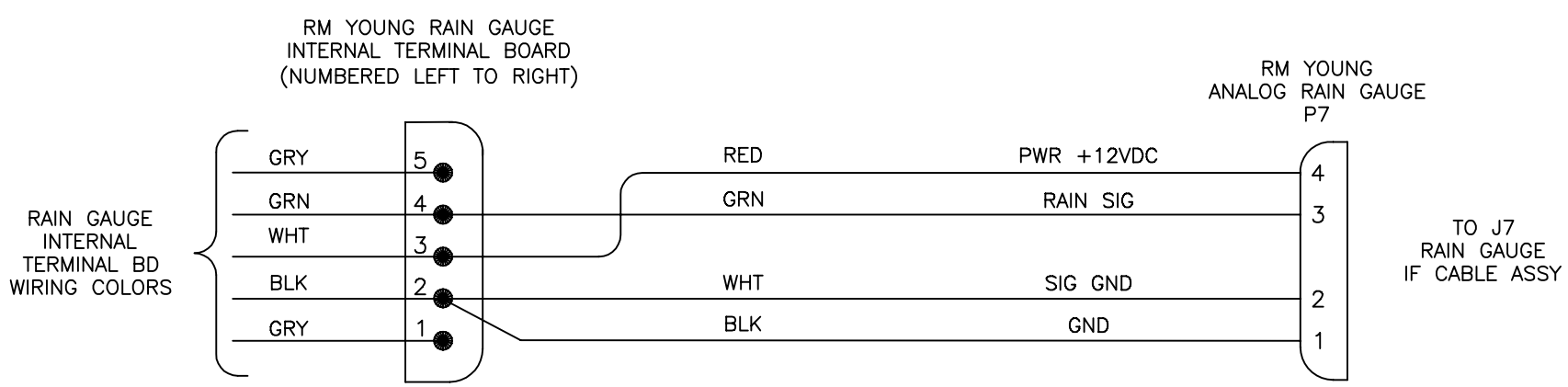

ANALOG RAIN GAUGE PIGTAIL WIRING -001

QTY -001	NOTES	DESCRIPTION	NDBC CONTROL NO.	PART/SPEC. NUMBER	ZONE	ITEM NO.
AR	1	COMPOUND, FLAME RETARDANT URETHANE RESIN, SCOTCHCAST, 7.6 OZ.	3030	3M 2130 B	C5	8
1	1	SLEEVE, CONNECTOR LOCKING, DELRIN, BLACK, MALE	14004	SEACON G-MLS-D	D4	7
1	1	CONNECTOR, RUBBER MOLDED, 4 CIRCUIT, MALE PLUG WITH SOCKETS	14002	SEACON VMG-4-MP-WOC	D4	6
AR	1	INSULATED SLEEVING,HEAT SHRINKABLE, BLK. .19	1561	–	D7	5
4	1	TERMINAL LUG, RING TONGUE, SOLDERED, NON-INSULATED, #6 STUD	6159	MIL-T-7928	D7	4
AR	1	CABLE IDENTIFICATION BAND MARKER –	–	NDBC-9230	D4	3
AR	1	INSULATED SLEEVING,HEAT SHRINKABLE, CLEAR, .38 O.D.	3678	MIL-I-23053/5A	D4	2
1	1	CABLE, 4 CONDUCTOR MIN, 20AWG, POLYURETHANE JACKET	NSN	ALPHA WIRE 25054	D6	1

PARTS LIST

REVISED: 10/01/09
DISCARD ALL PRIOR DWGS

AutoCAD Drawing/Sketch:
Printed Copies May Be Obsolete:
Validate Prior to use.

– NO.	HULL NO.	NEXT ASSY	USED ON
-001	X	X	WEAH

APPLICATION

UNLESS OTHERWISE SPECIFIED: DIMENSIONS ARE IN INCHES
TOLERANCES: DECIMALS .XX ±.05 .XXX ±.010 ANGULAR ±.05
DO NOT SCALE DRAWING

CONFIGURATION MGT. APPROVAL

FINISH

ECP-P00-0000

CONTRACT NO –

APPROVALS	DATE
DRAWN BY I.CRAFT	10/26/07
CHECKED BY	
ENGINEER APPROVAL	
NDBC PROJ ENGR	
APPROVED	

NATIONAL DATA BUOY CENTER
John C. Stennis Space Center
Stennis Space Center, Mississippi 39529-6000

TITLE
ANALOG RAIN GAUGE
PIGTAIL ASSEMBLY

SIZE	CAGE CODE	DRAWING NO	REV
D		02.3F03117	–

SCALE 1/1 RELEASE DATE: X SHEET 1 OF 1

PLOTTED ON: 10/1/2009 3:36:51 PM S:\Wb\SK-02.3F0-001 NOOSS OPT-PROD BUOY\AutoCad Buoy & Payload Sys Dwgs\SK02_3F03117.dwg