THIS DRAWING HAS BEEN GENERATED AND IS MAINTAINED BY A CAD SYSTEM. CHANGES SHALL ONLY BE INCORPORATED AS DIRECTED BY THE NDBC ENGINEERING DEPARTMENT.

REVISIONS				
ZONE	LTR	DESCRIPTION	DATE	APPROVED

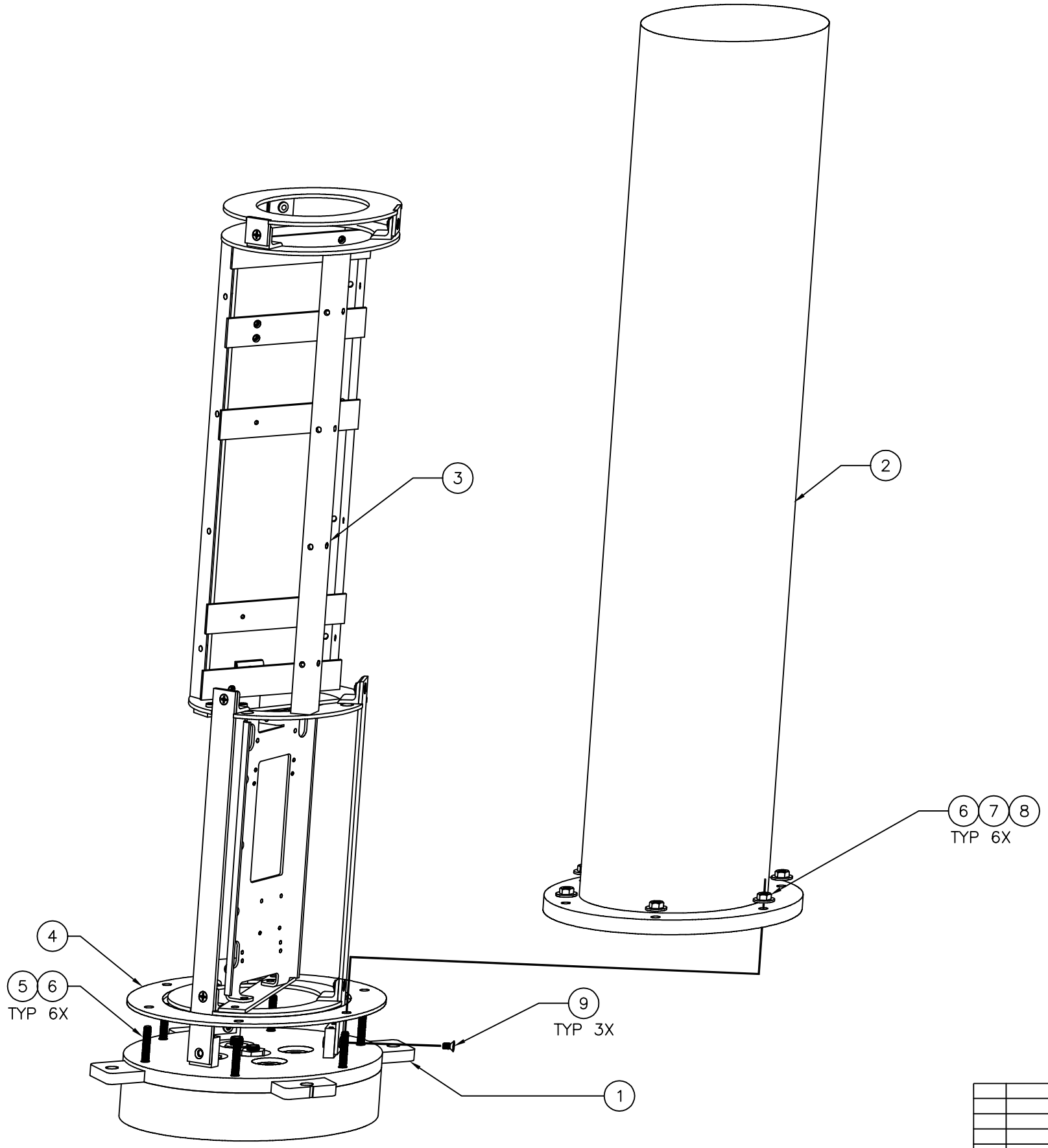

							10
	3		SCREW, MACH, FLAT HD, 10–32 X 0.63 LG., 316 SST	5517		–	9
	6		NUT, HEX, 0.25–20, 316 SST –	2700		–	8
	6		WASHER, LOCK, 0.25, 316 SST –	662		–	7
	12		WASHER, FLAT, 0.25, 316 SST –	727		–	6
	6		SCREW, CAP, 0.25–20 X 1.75 LG., 316 SST	1027		–	5
	1		TUBE ENCLOSURE GASKET –		NDBC–X001–001	–	4
–	1		TUBE ENCLOSURE EQUIPMENT RACK (DART)		NDBC–X003–003	–	3
–	1		TUBE ENCLOSURE CAN –		NDBC–X002–001	–	2
–	1		TUBE ENCLOSURE BASE (DART) –		NDBC–X001–003	–	1
–002	–001	NOTES	DESCRIPTION	NDBC CONTROL NO.	PART/SPEC. NUMBER	ZONE	ITEM NO.
QTY.							

PARTS LIST

DART TUBE ENCLOSURE ASSEMBLY –001

–

REVISED: 02/27/08
DISCARD ALL PRIOR DWGS

AutoCAD Drawing/Sketch:
Printed Copies May Be Obsolete:
Validate Prior to use.

–001	STD		DART
– NO.	HULL NO.	NEXT ASSY	USED ON
APPLICATION			

UNLESS OTHERWISE SPECIFIED:
DIMENSIONS ARE IN INCHES
TOLERANCES:
DECIMALS .XX ±.05 .XXX ±.010
ANGULAR ±.05
DO NOT SCALE DRAWING

CONFIGURATION MGT. APPROVAL

FINISH

SAIC From Science to Solutions

CONTRACT NO –

APPROVALS	DATE
DRAWN BY D.JAYNES	DATE 10/26/07
CHECKED BY	DATE
ENGINEER APPROVAL	DATE
NDBC PROJ ENGR	DATE
APPROVED	DATE

NATIONAL DATA BUOY CENTER
John C. Stennis Space Center
Stennis Space Center, Mississippi 39529-6000

TITLE
DART TUBE
ENCLOSURE ASSEMBLY
–

SIZE	CAGE CODE	DRAWING NO	REV
D		710000	–
SCALE 1/1	RELEASE DATE: X	SHEET 1 OF 1	

PLOTTED ON: 2/2/2010 12:41:47 PM S:\lvb\SK-02.3F0-001 NOOSS OPT-PROD BUOY\AutoCad Buoy & Payload Sys Dwgs\02.3F0710000.dwg