THIS DRAWING HAS BEEN GENERATED AND IS MAINTAINED BY A CAD SYSTEM. CHANGES SHALL ONLY BE INCORPORATED AS DIRECTED BY THE NDBC ENGINEERING DEPARTMENT.

REVISIONS				
ZONE	LTR	DESCRIPTION	DATE	APPROVED
-	-	--	XX/XX/XX	XX/XX/XX
-	-	--	XX/XX/XX	XX/XX/XX

NOTES:

1. O-RING IS A PART OF CONNECTOR, ITEM 1. REPLACE WITH AS568A-15 BUNA-N O-RING, McMASTER CARR #9555K16, CONTROL #13273, IF DAMAGED OR MISSING.
2. INSTALL TERMINALS, ITEMS 5 & 7, INTO CONNECTORS, ITEMS 3 4 & 6, AFTER CONNECTOR, ITEM 1, IS INSTALLED INTO THE ENCLOSURE BULKHEAD. OPEN SEAM OF TERMINALS SHOULD FACE TOWARD LATCH ON RECEPTACLE CONNECTOR FOR PROPER INSERTION.
3. USE A BROTHER P-TOUCH LABEL MAKER, MODEL PT-2400 OR EQUIVALENT, TO IDENTIFY CABLES AS SHOWN IN THE LABEL IDENTIFICATION TABLE. APPLY LABELS AS SHOWN IN THE CABLE VIEW.
4. EXTEND ONE WIRE FROM BULKHEAD CONNECTOR, ITEM 1, USING HOOKUP WIRE, ITEM 11, TO CREATE A SOLDERED SPLICE. COVER SPLICES WITH SLEEVING, ITEM 13.
5. 18 AWG WIRE COMES STANDARD WITH ITEM 1.

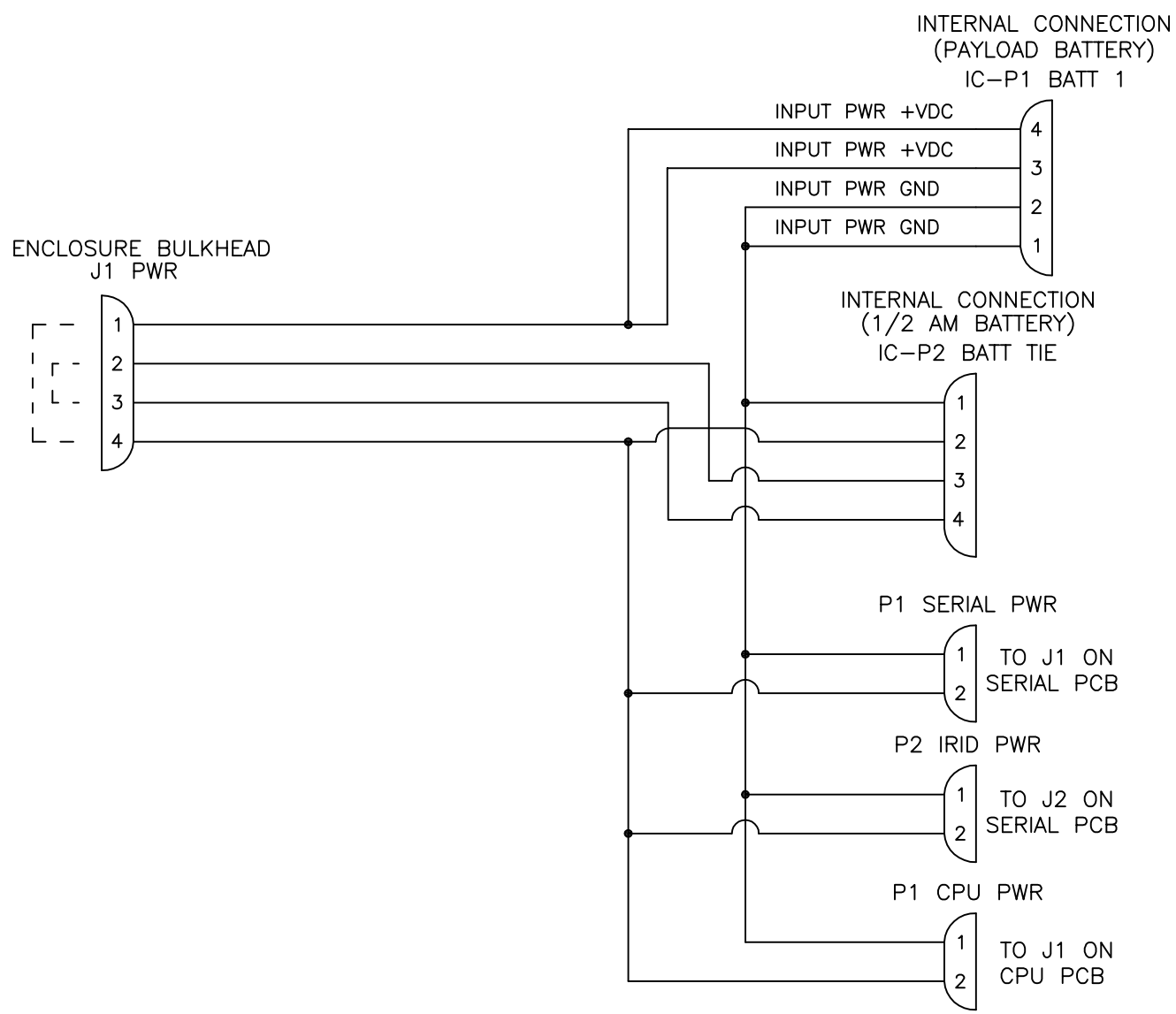

INPUT POWER PAYLOAD CABLE WIRING -001

QTY -001	NOTES	DESCRIPTION	NDBC CONTROL NO.	MANUFACTURER & PART NUMBER	ZONE (S)	ITEM NO.
AR	1	LABEL TAPE, BLK INK ON WHT, 9mm(3/8"), P-TOUCH TZ LAMINATED TAPE	14177	BROTHER TZ-221	D13	16
AR		TIEWRAP, PLASTIC, 4.00 LG., BLK —	6319		D14	15
AR		SLEEVING, HEAT SHRINK, 0.375 (3/8), BLK —	3676		C13	14
AR		SLEEVING, HEAT SHRINK, 0.250 (1/4), BLK —	1554		D12	13
AR		WIRE, HOOKUP 18AWG, 19/30 STRAND, TFE INSULATION, WHT	—	ALPHA WIRE 5857-01	C13	12
AR		WIRE, HOOKUP 22AWG, 19/34 STRAND, TFE INSULATION, WHT	12007	ALPHA WIRE 5855-01	D12	11
1		WASHER, SPLIT LOCK 316 SST, 7/16" —	14127	McMASTER CARR 92147A032	D14	10
1		WASHER, NYLON ISOLATION, 7/16", 0.75" OD —	14042	McMASTER CARR 90295A185	D14	9
1		NUT, HEX JAM 316 SST, 7/16 X 20 —	14040	McMASTER CARR 94805A221	D14	8
4		TERMINAL, CRIMP SOCKET, MINI-FIT 18-24AWG, GOLD	13050	MOLEX 39-00-0182	C11	7
1		CONNECTOR, RECEPTACLE, MINI-FIT, 4 CIR.	13045	MOLEX 39-01-2040	C11	6
10		TERMINAL, CRIMP SOCKET, MICRO-FIT 3.0, 20-24AWG, GOLD	14053	MOLEX 43030-0002	B11, C11 D11	5
3		CONNECTOR, RECEPTACLE, MICRO-FIT 3.0, 2 CIR.	13061	MOLEX 43025-0200	B11, C11	4
1		CONNECTOR, RECEPTACLE, MICRO-FIT 3.0, 4 CIR.	13478 14057	MOLEX 43025-0400	D11	3
1		SLEEVE, CONNECTOR LOCKING, FEMALE, DELRIN, WTH SNAP RING, WETMATE	—	SUBCONN DLSA-F	D15	2
1		CONNECTOR, SST BULKHD FEMALE WET-MATE, 7/16"X 20 WTH O-RING, 4 CIR.	—	SUBCONN BH4FS	D16	1

PARTS LIST

REVISED: 03/06/08
DISCARD ALL PRIOR DWGS

AutoCAD Drawing/Sketch:
Printed Copies May Be Obsolete:
Validate Prior to use.

-001 NO.	HULL NO.	NEXT ASSY	USED ON
	X	X	DART

APPLICATION

UNLESS OTHERWISE SPECIFIED: DIMENSIONS ARE IN INCHES
TOLERANCES
DECIMALS .XX ±.05 .XXX ±.010 ANGULAR ±.05
DO NOT SCALE DRAWING

CONFIGURATION MGT. APPROVAL

FINISH

ECP-P00-0000

CONTRACT NO —

APPROVALS	DATE
DRAWN BY D.JAYNES	DATE 09/20/07
CHECKED BY —	DATE -
ENGINEER APPROVAL —	DATE -
NDBC PROJ ENGR —	DATE -
APPROVED BY —	DATE -

NATIONAL DATA BUOY CENTER
John C. Stennis Space Center
Stennis Space Center, Mississippi 39529-6000

TITLE
INPUT POWER PAYLOAD CABLE ASSEMBLY

SIZE	CAGE CODE	DRAWING NO	REV
D		731001	-

SCALE 1/1 | RELEASE DATE: X | SHEET 1 OF 2

PLOTTED ON: 2/2/2010 12:49:34 PM S:\lvlb\SK-02.3F0-001 NOOSS OPT-PROD BUOY\AutoCad Buoy & Payload Sys Dwgs\02.3F0731001.dwg

LABEL IDENTIFICATION TABLE						
CABLE ID NUMBER	LABEL X1	LABEL X2	LABEL X3	LABEL X4	LABEL X5	LABEL X6
731001-001	J1 PWR	IC-P1 BATT 1	IC-P2 BATT TIE	P1 SERIAL PCB	P2 SERIAL PCB	P1 CPU PCB

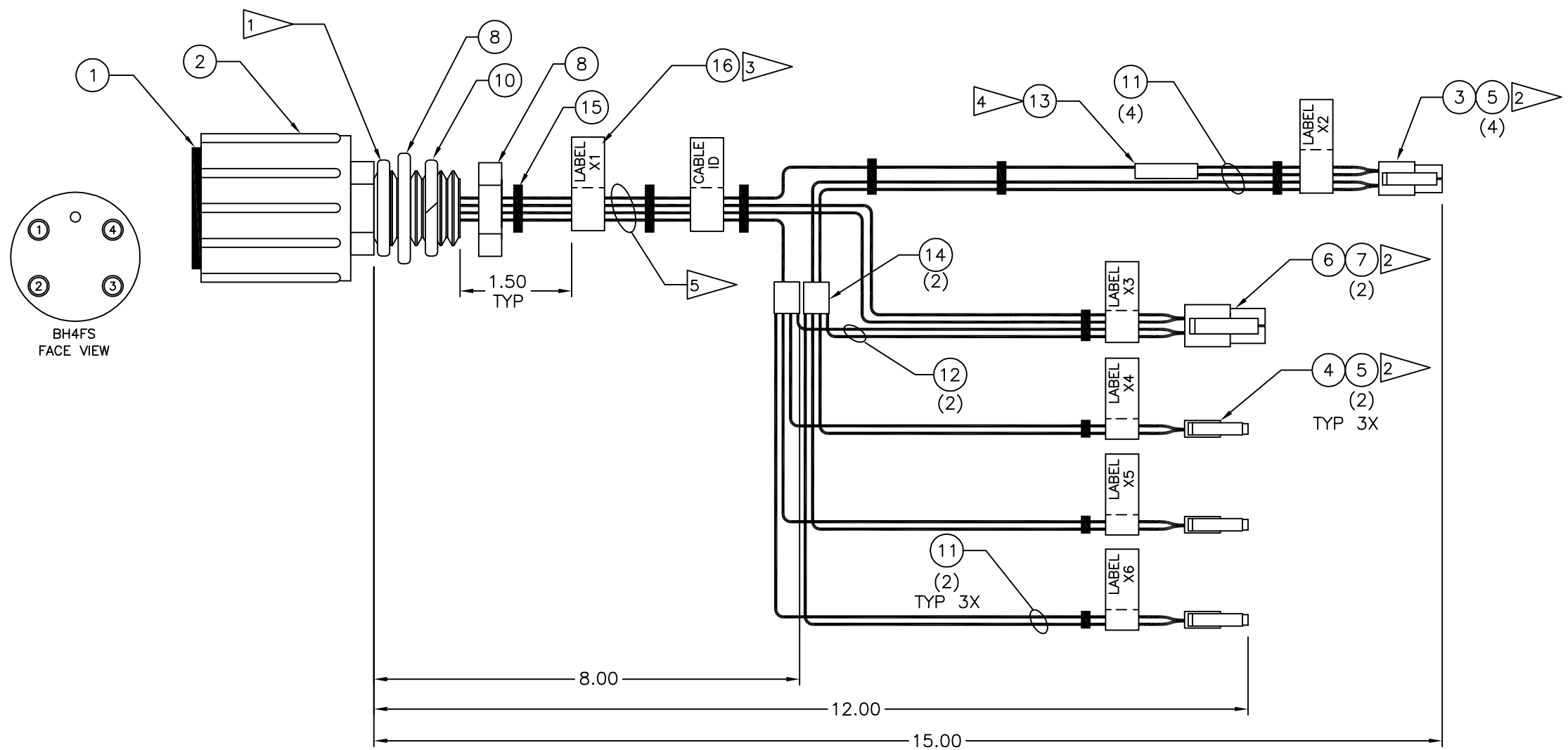

INPUT POWER PAYLOAD CABLE ASSEMBLY -001

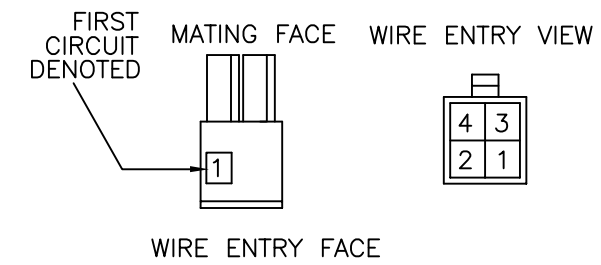

4 CIRCUIT MICRO-FIT AND MINI-FIT RECEPTACLE

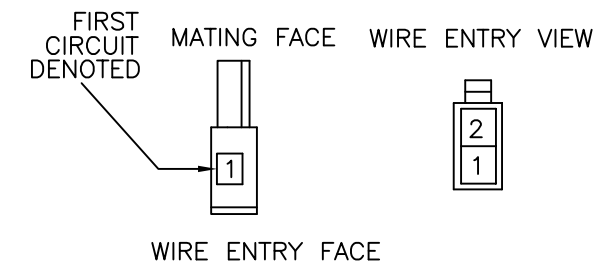

2 CIRCUIT MICRO-FIT RECEPTACLE

SIZE	CAGE CODE	DRAWING NO	REV
D		731001	-
SCALE 1/1	RELEASE DATE: X		SHEET 2 OF 2