THIS DRAWING HAS BEEN GENERATED AND IS MAINTAINED BY A CAD SYSTEM. CHANGES SHALL ONLY BE INCORPORATED AS DIRECTED BY THE NDBC ENGINEERING DEPARTMENT.

REVISIONS				
ZONE	LTR	DESCRIPTION	DATE	APPROVED

NOTES:

1. OPEN SEAM OF TERMINALS, ITEM 5, SHOULD FACE TOWARD LATCH ON RECEPTACLE CONNECTOR, ITEM 4, FOR PROPER INSERTION.
2. USE A BROTHER P-TOUCH LABEL MAKER, MODEL PT-2400 OR EQUIVALENT, TO IDENTIFY CABLES AS SHOWN IN THE LABEL IDENTIFICATION TABLE. APPLY LABELS AS SHOWN IN THE CABLE VIEW.
3. CONNECT PINS 16 & 19 TOGETHER ON CONNECTOR, ITEM 1, USING A SHORT PIECE OF WIRE, ITEM 6, AS INDICATED IN THE CABLE WIRING VIEW.
4. BE AWARE THAT THE TERMINAL NUMBERING USED FOR CONNECTOR, ITEM 4, DOES NOT FOLLOW THE MANUFACTURER'S RECOMMENDED NUMBERING SCHEME.
5. ALLOW .05 OF SPACING BETWEEN END OF SLEEVING, ITEM 7, AND CONNECTOR, ITEM 4.

LABEL IDENTIFICATON TABLE		
CABLE ID NUMBER	LABEL X1	LABEL X2
732001-001	DB-25 IRID. MODEM IF.	P11 SERIAL PCB

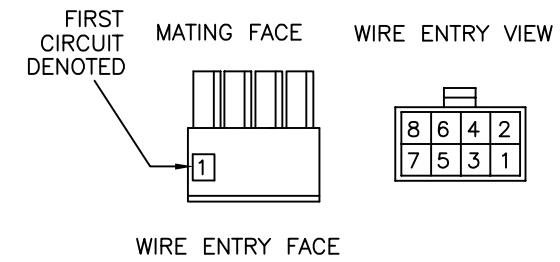

4 8 CIRCUIT MICRO-FIT RECEPTACLE

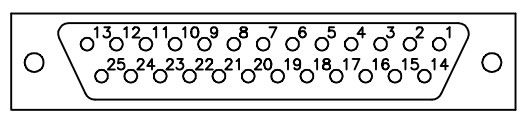

D-SUB 25
FACE VIEW

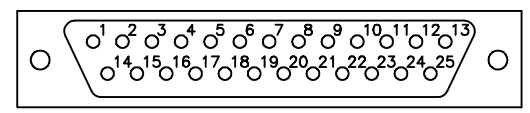

D-SUB 25
WIRE ENTRY VIEW

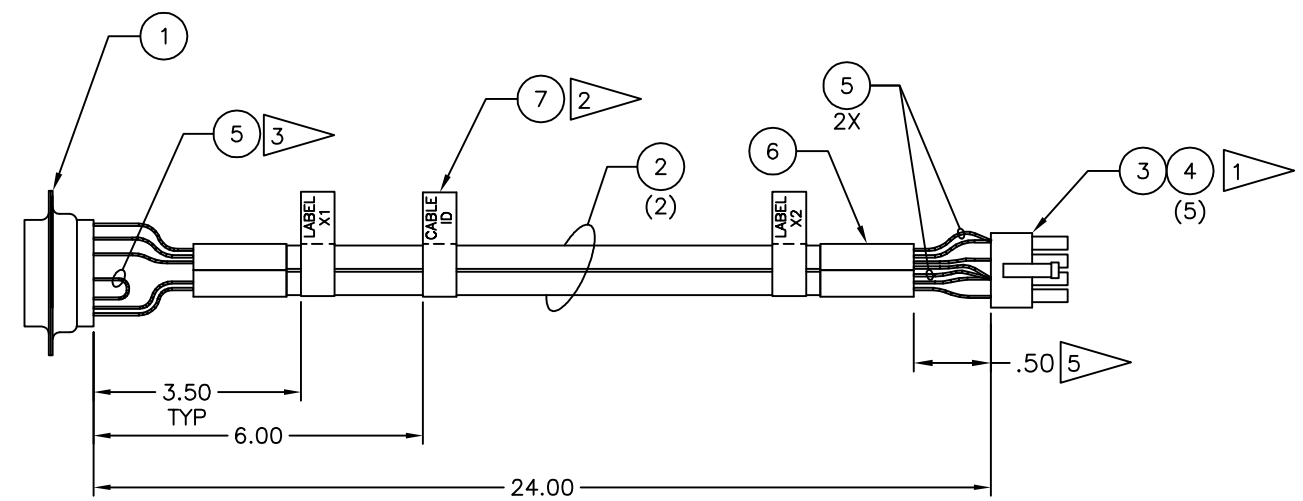

IRIDIUM INTERFACE PAYLOAD CABLE ASSEMBLY -001

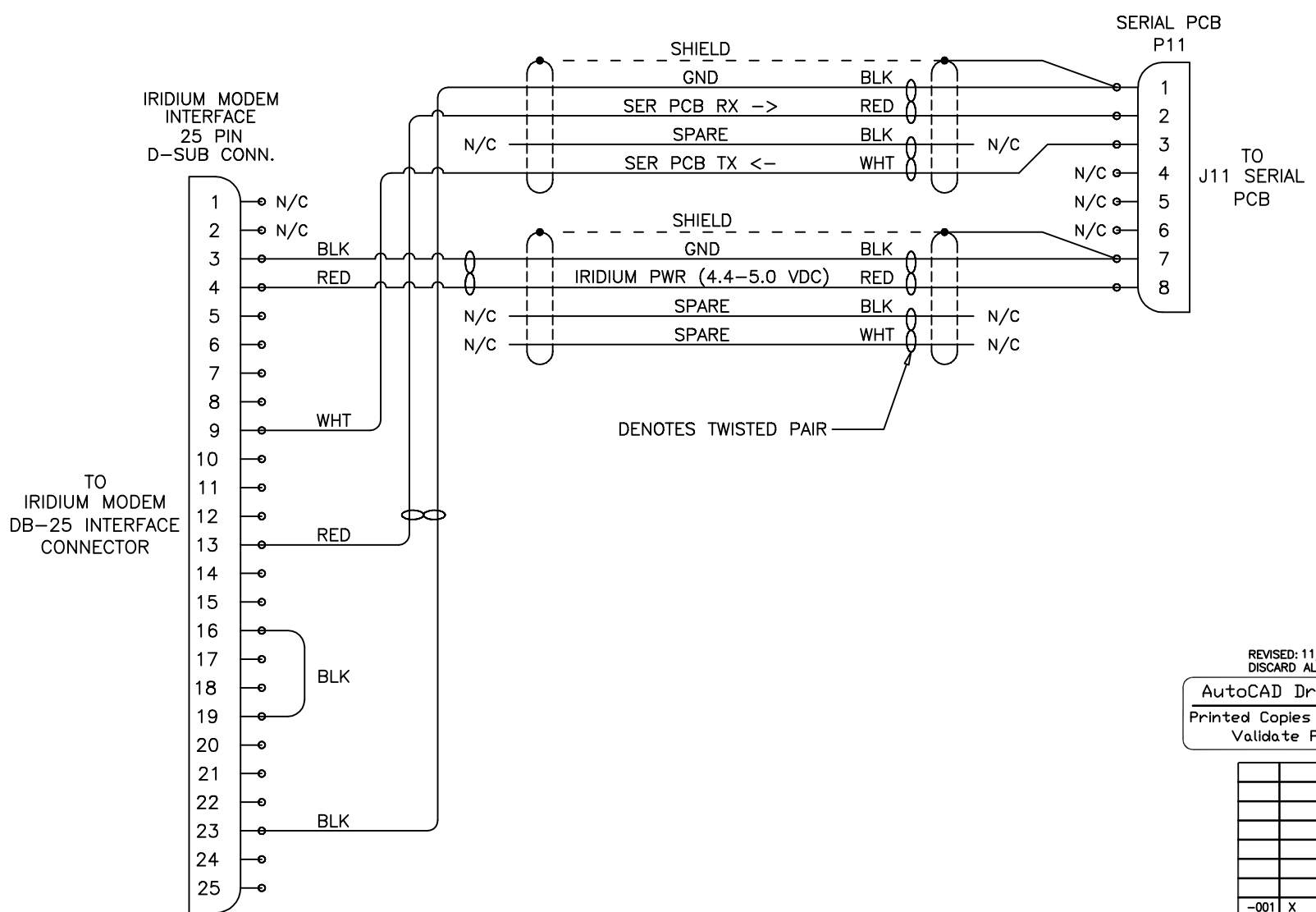

IRIDIUM INTERFACE PAYLOAD CABLE WIRING -001

QTY	NOTES	DESCRIPTION	NDBC CONTROL NO.	MANUFACTURER & PART NUMBER	ZONE (S)	ITEM NO.
AR	2	LABEL TAPE, BLK INK ON WHT, 9mm(3/8"), P-TOUCH TZ LAMINATED TAPE	14177	BROTHER TZ-221	C3	7
AR		SLEEVING, SHRINK, BLK, 0.2500" (1\4)	1554	– –	C2	6
AR		WIRE, HOOK-UP, 22 AWG TFE INSUL, BLK	12008	– –	C2	5
5		TERMINAL, CRIMP SOCKET, MICRO-FIT 3.0, 20-24AWG, GOLD	13064	MOLEX 43030-0009	C1	4
1		CONNECTOR, RECEPTACLE, MICRO-FIT 3.0, 6 CIR.	13063	MOLEX 43025-0800	C1	3
AR		CABLE, DUAL TWISTED PAIR, 24 AWG WTH SHIELD	13524	BELDEN 82502	C2	2
1		CONNECTOR, FEMALE, 25 SOCKET, CINCH, DB25S	13558	ALLIED 360-0044	C4	1

-001 PARTS LIST

REVISED: 11/30/07
DISCARD ALL PRIOR DWGS

AutoCAD Drawing/Sketch:
Printed Copies May Be Obsolete:
Validate Prior to use.

-001 NO.	HULL NO.	NEXT ASSY	USED ON
	X	X	DART

APPLICATION

UNLESS OTHERWISE SPECIFIED: DIMENSIONS ARE IN INCHES
TOLERANCES:
DECIMALS: .XX ±.05, .XXX ±.010
ANGULAR: ±.05
DO NOT SCALE DRAWING

CONFIGURATION MGT. APPROVAL

FINISH

ECP-P00-0000

CONTRACT NO –

APPROVALS	DATE
DRAWN BY D.JAYNES	DATE 11/30/07
CHECKED BY –	DATE –
ENGINEER APPROVAL –	DATE –
NDBC PROJ ENGR –	DATE –
APPROVED BY –	DATE –

NATIONAL DATA BUOY CENTER
John C. Stennis Space Center
Stennis Space Center, Mississippi 39529-6000

TITLE
IRIDIUM INTERFACE
PAYLOAD CABLE ASSEMBLY
–

SIZE	CAGE CODE	DRAWING NO	REV
D		732001	–

SCALE 1/1 | RELEASE DATE: X | SHEET 1 OF 1

PLOTTED ON: 2/2/2010 12:54:54 PM S:\lvlb\SK-02.3F0-001 NOOSS OPT-PROD BUOY\AutoCad Buoy & Payload Sys Dwgs\02.3F0732001.dwg