THIS DRAWING HAS BEEN GENERATED AND IS MAINTAINED BY A CAD SYSTEM. CHANGES SHALL ONLY BE INCORPORATED AS DIRECTED BY THE NDBC ENGINEERING DEPARTMENT.

REVISIONS				
ZONE	LTR	DESCRIPTION	DATE	APPROVED
-	-	--	XX/XX/XX	XX/XX/XX
-	-	--	XX/XX/XX	XX/XX/XX

NOTES:

1. USE A BROTHER P-TOUCH LABEL MAKER, MODEL PT-2400 OR EQUIVALENT, TO IDENTIFY CABLES AS SHOWN IN THE LABEL IDENTIFICATION TABLE. APPLY LABELS AS SHOWN IN THE CABLE VIEW.
2. CONNECT SMALLER GAUGE WIRES, ITEM 7, TO LARGER GAUGE WIRES, ITEM 8, TO CREATE A SOLDERED SPLICE. COVER SPLICES WITH SLEEVING, ITEM 9.

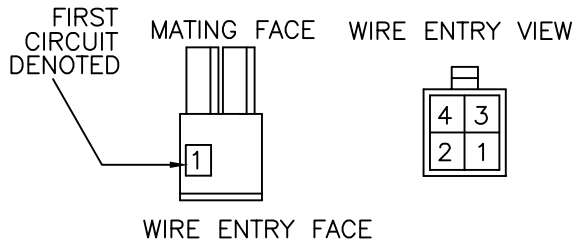

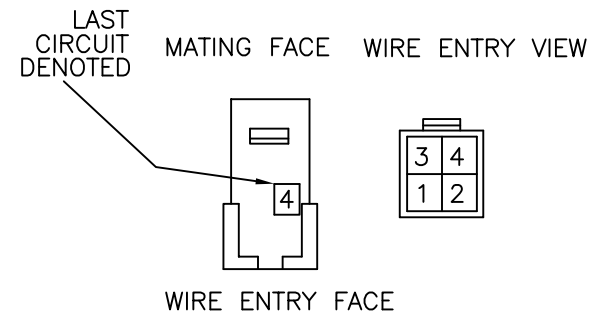

4 CIRCUIT MINI-FIT PLUG

LABEL IDENTIFICATON TABLE			
CABLE ID NUMBER	LABEL X1	LABEL X2	LABEL X3
732004-001	IC-P3 BATT 2	J1 AM PWR	IC-J2 C BATT TIE

4 CIRCUIT MICRO-FIT RECEPTACLE

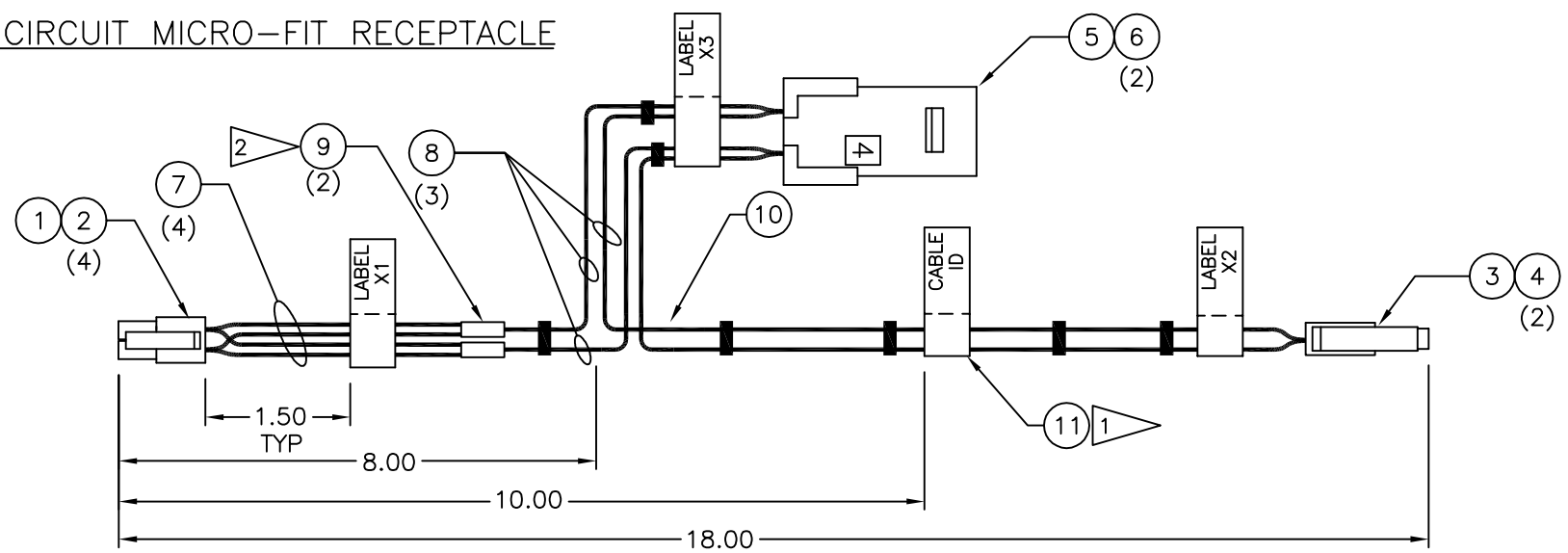

AM POWER PAYLOAD CABLE ASSEMBLY -001

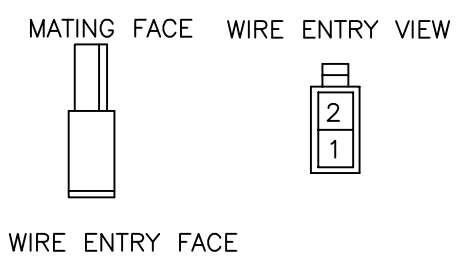

2 CIRCUIT MINI-FIT RECEPTACLE

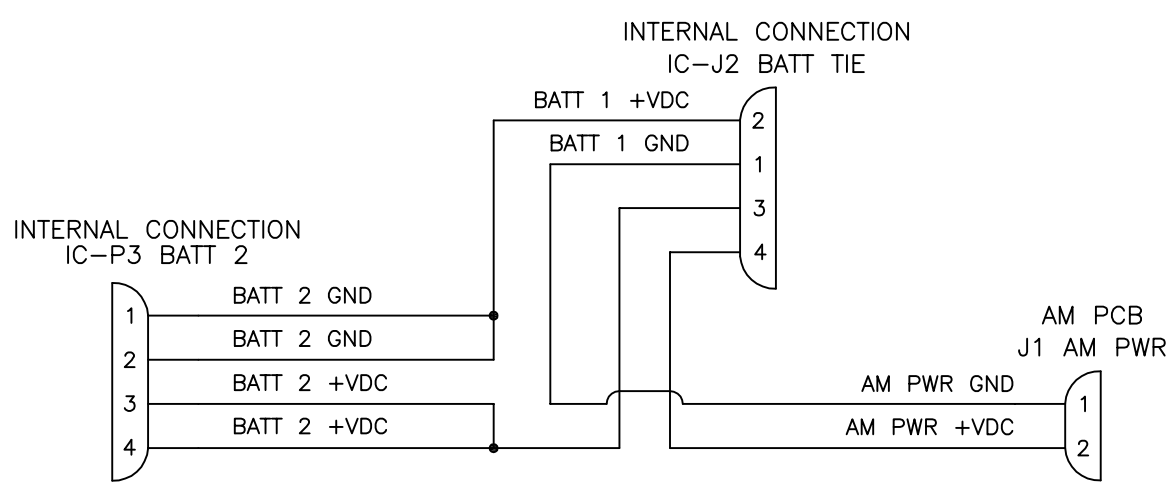

AM POWER PAYLOAD CABLE WIRING -001

	AR	1	LABEL TAPE, BLK INK ON WHT, 9mm(3/8"), P-TOUCH TZ LAMINATED TAPE	14177	BROTHER TZ-221	B5	11
	AR		TIEWRAP, PLASTIC, 4.00 LG., BLK —	6319		C6	10
	AR		SLEEVING, HEAT SHRINK, 0.250 (1/4), BLK —	1554		C7	9
	AR		WIRE, HOOKUP 18AWG, 19/30 STRAND, TFE INSULATION, WHT	—	ALPHA WIRE 5857-01	C7	8
	AR		WIRE, HOOKUP 22AWG, 19/34 STRAND, TFE INSULATION, WHT	12007	ALPHA WIRE 5855-01	C7	7
	4		TERMINAL, CRIMP PIN, MINI-FIT 18-24AWG, GOLD	—	MOLEX 39-00-0220	C5	6
	1		CONNECTOR, PLUG, MINI-FIT, 4 CIR.	X	MOLEX 39-01-2041	C5	5
	2		TERMINAL, CRIMP SOCKET, MINI-FIT 18-24AWG, GOLD	—	MOLEX 39-00-0182	C4	4
	1		CONNECTOR, RECEPTACLE, MINI-FIT, 2 CIR.	—	MOLEX 39-01-2020	C4	3
	4		TERMINAL, CRIMP SOCKET, MICRO-FIT 3.0, 20-24AWG, GOLD	14053	MOLEX 43030-0002	C8	2
	1		CONNECTOR, RECEPTACLE, MICRO-FIT 3.0, 4 CIR.	13478	MOLEX 43025-0400	C8	1
	-001	NOTES	DESCRIPTION	NDBC CONTROL NO.	MANUFACTURER & PART NUMBER	ZONE (S)	ITEM NO.
QTY							

PARTS LIST

REVISED: 01/28/08
DISCARD ALL PRIOR DWGS

AutoCAD Drawing/Sketch:
Printed Copies May Be Obsolete:
Validate Prior to use.

-001	X	X	DART
- NO.	HULL NO.	NEXT ASSY	USED ON
APPLICATION			

UNLESS OTHERWISE SPECIFIED: DIMENSIONS ARE IN INCHES
TOLERANCES
DECIMALS .XX ±.05 .XXX ±.010
ANGULAR ±.05
DO NOT SCALE DRAWING

CONFIGURATION MGT. APPROVAL

FINISH

ECP-P00-0000

CONTRACT NO —

APPROVALS	DATE
DRAWN BY D.JAYNES	DATE 09/20/07
CHECKED BY —	DATE —
ENGINEER APPROVAL —	DATE —
NDBC PROJ ENGR —	DATE —
APPROVED BY —	DATE —

NATIONAL DATA BUOY CENTER
John C. Stennis Space Center
Stennis Space Center, Mississippi 39529-6000

TITLE
AM POWER PAYLOAD CABLE ASSEMBLY
—

SIZE	CAGE CODE	DRAWING NO	REV
D		732004	-
SCALE 1/1	RELEASE DATE: X	SHEET 1 OF 1	

PLOTTED ON: 2/2/2010 12:59:09 PM S:\vlb\SK-02.3F0-001 NOOSS OPT-PROD BUOY\AutoCad Buoy & Payload Sys Dwgs\02.3F0732004.dwg