THIS DRAWING HAS BEEN GENERATED AND IS MAINTAINED BY A CAD SYSTEM. CHANGES SHALL ONLY BE INCORPORATED AS DIRECTED BY THE NDBC ENGINEERING DEPARTMENT.

REVISIONS				
ZONE	LTR	DESCRIPTION	DATE	APPROVED

NOTES:

1. REF. NDBC–3001 FOR CABLE SPECIFICATIONS AND NDBC–3002 FOR CABLE FABRICATION/WORKMANSHIP STANDARDS.
2. USE A BROTHER P–TOUCH LABEL MAKER, MODEL PT–2400 OR EQUIVALENT, TO IDENTIFY CABLES AS SHOWN IN THE LABEL IDENTIFICATION TABLE. APPLY LABELS AS SHOWN IN THE CABLE VIEW.
3. CONNECT CABLE SHIELD TO PIN 1 ON CONNECTOR, ITEM 5, USING A SHORT PIECE OF WIRE, ITEM 7, AS INDICATED IN THE CABLE WIRING VIEW.
4. BE AWARE THAT THE TERMINAL NUMBERING USED FOR CONNECTOR, ITEM 5, DOES NOT FOLLOW THE MANUFACTURER'S RECOMMENDED NUMBERING SCHEME.
5. INSERT A TERMINAL, ITEM 4, INTO EACH POSITION OF CONNECTOR, ITEM 2, INCLUDING THOSE NOT UTILIZED.
6. INSERT A DUMMY TERMINAL IN POSITION 10 OF CONNECTOR, ITEM 2. DUMMY TERMINAL IS CREATED BY SOLDERING SOCKET END OF TERMINAL, ITEM 4, CLOSED.
7. OPEN SEAM OF TERMINALS, ITEM 6, SHOULD FACE TOWARD LATCH ON RECEPTACLE CONNECTOR, ITEM 5, FOR PROPER INSERTION.

LABEL IDENTIFICATON TABLE		
CABLE ID NUMBER	LABEL X1	LABEL X2
732006–001	AM DSP PCB P4	CPU PCB P3

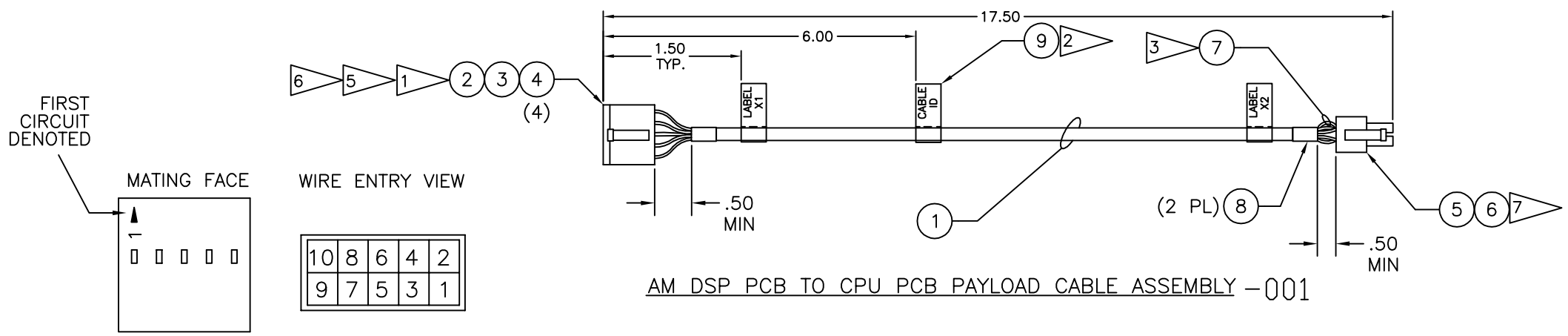

AM DSP PCB TO CPU PCB PAYLOAD CABLE ASSEMBLY –001

10 CIRCUIT C–GRID HOUSING

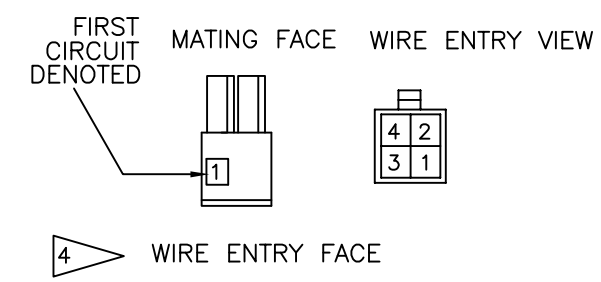

4 CIRCUIT MICRO–FIT RECEPTACLE

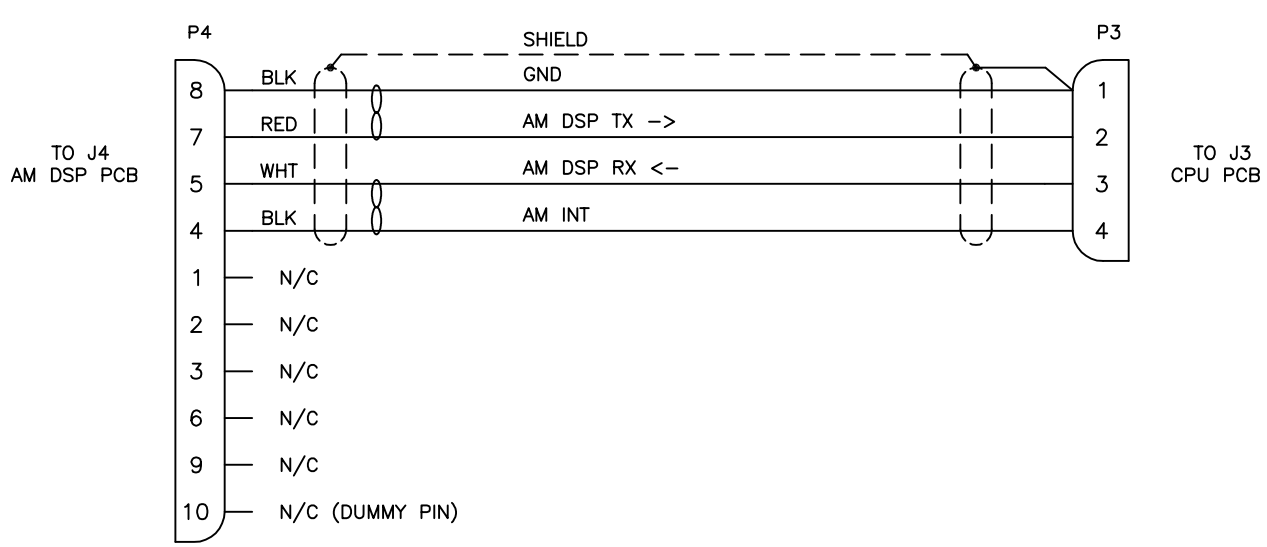

AM DSP PCB TO CPU PCB PAYLOAD CABLE WIRING –001

REVISED: 11/30/07
DISCARD ALL PRIOR DWGS

AutoCAD Drawing/Sketch:
Printed Copies May Be Obsolete:
Validate Prior to use.

QTY	NOTES	DESCRIPTION	NDBC CONTROL NO.	MANUFACTURER & PART NUMBER	ZONE (S)	ITEM NO.
AR	2	LABEL TAPE, BLK INK ON WHT, 9mm(3/8"), P–TOUCH TZ LAMINATED TAPE	14177	BROTHER TZ–221	C5	9
AR		SLEEVING, SHRINK, BLK, 0.2500" (1\4) –	1554	– –	C4	8
AR		WIRE, HOOK–UP, 22 AWG, BLACK –	13161	– –	C4	7
4		TERMINAL, CRIMP SOCKET, MICRO–FIT 3.0, 20–24AWG, GOLD	13064	MOLEX 43030–0009	C3	6
1		CONNECTOR, RECEPTACLE, MICRO–FIT 3.0, 4 CIR.	13478	MOLEX 43025–0400	C3	5
4		TERMINAL, CRIMP SOCKET, C–GRID, 22–24 AWG, GOLD	13253	MOLEX 1602–0103	G6	4
1		LOCK, CONNECTOR, C–GRID HOUSING, 0.1" PITCH, FOR 10 CIR.	13060	MOLEX 1504–5101	G7	3
1		CONNECTOR, FEMALE HOUSING, C–GRID, 0.1" PITCH, 10 CIR.	13056	MOLEX 2255–2101	G7	2
AR		CABLE, 4 COND. TW. PAIR, 22 AWG, SHIELDED	13524	BELDON 82502	C5	1
–001						

PARTS LIST

– NO.	HULL NO.	NEXT ASSY	USED ON
–001	X	X	DART

APPLICATION

UNLESS OTHERWISE SPECIFIED: DIMENSIONS ARE IN INCHES
TOLERANCES
DECIMALS .XX ±.05 .XXX ±.010 ANGULAR ±.05
DO NOT SCALE DRAWING

CONFIGURATION MGT. APPROVAL

FINISH

ECP–P00–0000

CONTRACT NO –

APPROVALS	DATE
DRAWN BY D.JAYNES	DATE 11/30/07
CHECKED BY –	DATE –
ENGINEER APPROVAL –	DATE –
NDBC PROJ ENGR –	DATE –
APPROVED BY	DATE

NATIONAL DATA BUOY CENTER
John C. Stennis Space Center
Stennis Space Center, Mississippi 39529–6000

TITLE
AM DSP PCB TO CPU PCB PAYLOAD CABLE ASSEMBLY

SIZE	CAGE CODE	DRAWING NO	REV
D		732006	

SCALE 1/1 | RELEASE DATE: X | SHEET 1 OF 1

PLOTTED ON: 2/2/2010 1:01:45 PM S:\vlb\SK–02.3F0–001 NOOSS OPT–PROD BUOY\AutoCad Buoy & Payload Sys Dwgs\02.3F0732006.dwg