THIS DRAWING HAS BEEN GENERATED AND IS MAINTAINED BY A CAD SYSTEM. CHANGES SHALL ONLY BE INCORPORATED AS DIRECTED BY THE NDBC ENGINEERING DEPARTMENT.

REVISIONS				
ZONE	LTR	DESCRIPTION	DATE	APPROVED

NOTES:

1. REF. NDBC–3001 FOR CABLE SPECIFICATIONS AND NDBC–3002 FOR CABLE FABRICATION/WORKMANSHIP STANDARDS.
2. ITEMS 1 & 2 CAN BE ORDERED AS A VENDOR CABLE. PASTERNACK CABLE ASSEMBLY PE3918–04, NDBC CONTROL # 13461.
3. USE A BROTHER P–TOUCH LABEL MAKER, MODEL PT–2400 OR EQUIVALENT, TO IDENTIFY CABLES AS SHOWN IN THE LABEL IDENTIFICATION TABLE. APPLY LABELS AS SHOWN IN THE CABLE VIEW.

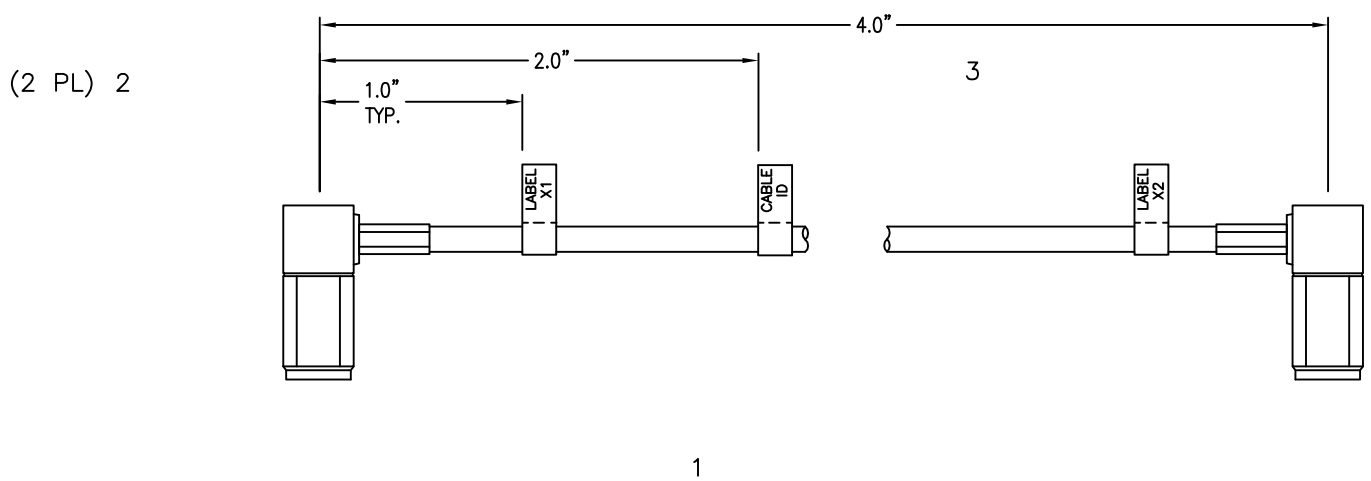

AM DSP TO AM BPF PCB PAYLOAD CABLE ASSEMBLY –001

LABEL IDENTIFICATON TABLE		
CABLE ID NUMBER	LABEL X1	LABEL X2
732007–001	AM BPF PCB P2	AM DSP PCB P10

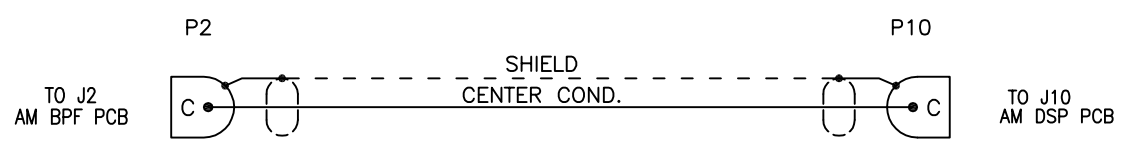

AM DSP TO AM BPF PCB PAYLOAD CABLE WIRING –001

–002	–001						
QTY		NOTES	DESCRIPTION	NDBC CONTROL NO.	MANUFACTURER & PART NUMBER	ZONE (S)	ITEM NO.
							5
							4
–	AR	3	LABEL TAPE, BLK INK ON WHT, 9mm(3/8"), P–TOUCH TZ LAMINATED TAPE	14177	BROTHER TZ–221	–	3
–	2		CONNECTOR, COAX, SMC PLUG RT. ANGLE –	13092	PASTERNACK PE4051	–	2
–	AR		CABLE, COAX, 50 OHM 26 AWG CENTER COND., 0.0105" OD, RG174/U	–	ALPHA WIRE 9174	–	1

PARTS LIST

REVISED: 12/12/07
DISCARD ALL PRIOR DWGS

AutoCAD Drawing/Sketch:
Printed Copies May Be Obsolete:
Validate Prior to use.

–001	X	X	DART
– NO.	HULL NO.	NEXT ASSY	USED ON
APPLICATION			

UNLESS OTHERWISE SPECIFIED: DIMENSIONS ARE IN INCHES
TOLERANCES:
DECIMALS .XX ± .05 .XXX ± .010
ANGULAR ± .05
DO NOT SCALE DRAWING

CONFIGURATION MGT. APPROVAL

FINISH

ECP–P00–0000

CONTRACT NO –

APPROVALS	DATE
DRAWN BY D.JAYNES	DATE 11/30/07
CHECKED BY –	DATE –
ENGINEER APPROVAL –	DATE –
NDBC PROJ ENGR –	DATE –
APPROVED BY	DATE

NATIONAL DATA BUOY CENTER
John C. Stennis Space Center
Stennis Space Center, Mississippi 39529–6000

TITLE
AM DSP PCB TO AM BPF PCB PAYLOAD CABLE ASSEMBLY

SIZE	CAGE CODE	DRAWING NO	REV
D		732007	
SCALE 1/1	RELEASE DATE: X	SHEET 1 OF 1	

PLOTTED ON: 2/2/2010 1:10:49 PM S:\wlb\SK–02.3F0–001 NOOSS OPT–PROD BUOY\AutoCad Buoy & Payload Sys Dwgs\02.3F0732007.dwg