NOTES:

1. #10-32 X 1.0 FLAT HD. HARDWARE IS SUPPLIED WITH EACH NEW ANTENNA, ITEM 5 . REPLACE WITH NDBC CTRL # 3329 IF DAMAGED OR MISSING.

2. DO NOT LOOSEN OR REMOVE TAMPER RESISTANT MOUNTING SCREWS ON THE TRANSMITTER AMPLIFIER. THE TRANSMITTER AND AMPLIFIER ARE A MATCHED SET AND CAN NOT BE SWAPED OUT.

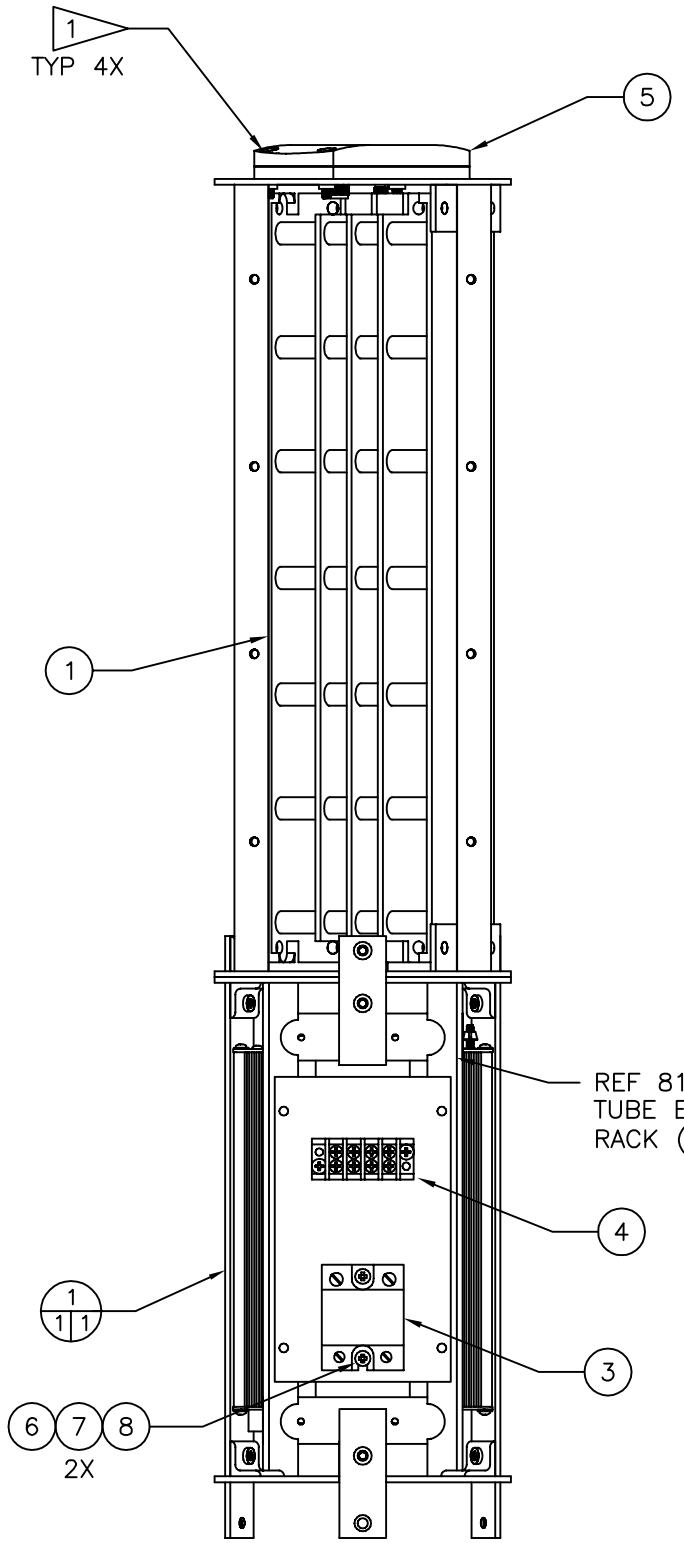

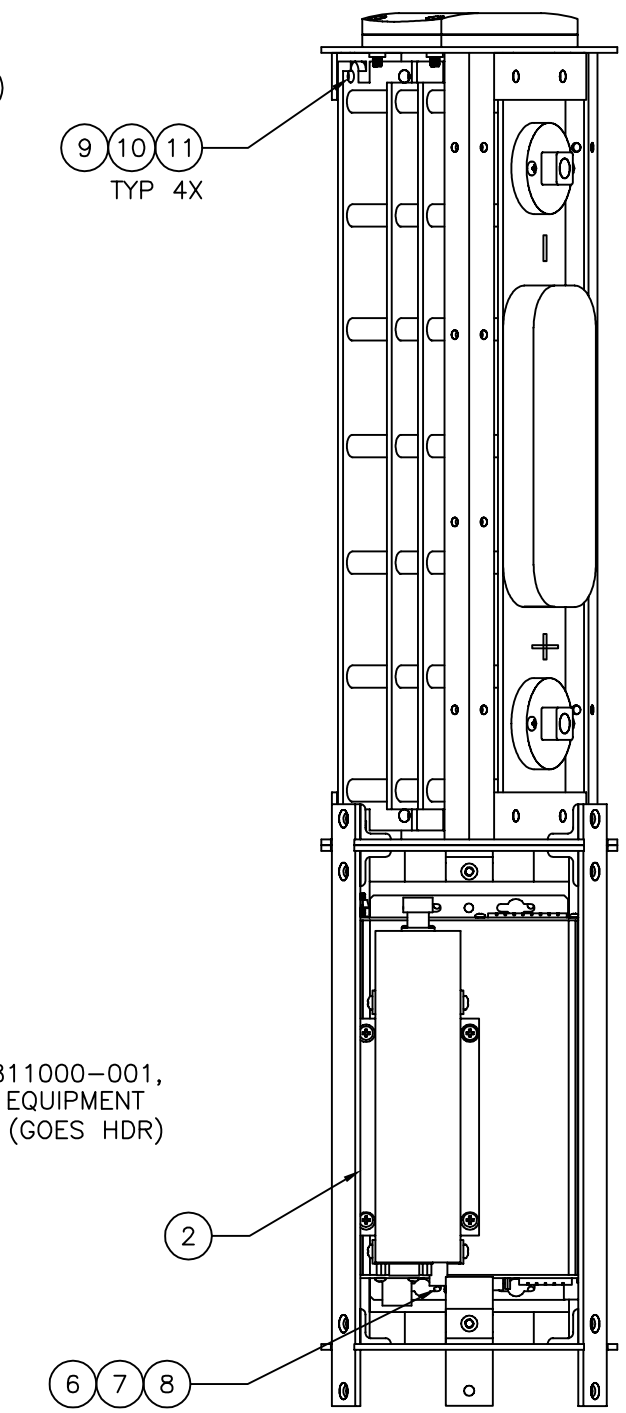

DETAIL 1 (1 1)
TRANSMITTER INSTALLATION

GOES HDR TUBE EQUIPMENT INSTALLATION -001

THIS DRAWING HAS BEEN GENERATED AND IS MAINTAINED BY A CAD SYSTEM. CHANGES SHALL ONLY BE INCORPORATED AS DIRECTED BY THE NDBC ENGINEERING DEPARTMENT.

REVISIONS				
ZONE	LTR	DESCRIPTION	DATE	APPROVED

QTY.	NOTES	DESCRIPTION	NDBC CONTROL NO.	PART/SPEC. NUMBER	ZONE	ITEM NO.
12		WASHER, LOCK, #10, 18-8SST, McMASTER-CARR	2186	92146A011	D6	11
12		WASHER, FLAT, #10, 300SST, McMASTER-CARR	3417	90107A011	D6	10
12		SCREW, MACH, FLAT HD, #10-32 X 0.50, 300SST, McMASTER-CARR	7252	91400A829	D6	9
16		WASHER, LOCK, #8, 300SST, McMASTER-CARR	3083	92146A009	A8,A6	8
8		WASHER, FLAT, #8, 300SST, McMASTER-CARR	6260	90107A010	A8,A6	7
6		SCREW, MACH, PAN HD, #8-32 X 0.50, 300SST, McMASTER-CARR	6759		A8,A6	6
1		ANTENNA, DUAL USE, GPS/RF, WTH TNC & SMA CONN., NAL RESEARCH		SAF-4070-IGUK	D7	5
1		TERMINAL BOARD, 4 CIRCUIT, #6 SCREW SST, DBL ROW		McMASTER-CARR 7527K44	B7	4
1		RELAY, SOLID STATE, CRYDOM		D1D12	A7	3
1	2	TRANSMITTER, GOES HDR WTH AMP, SUTRON		SL2-B40W-1	B6	2
1		MODULE, ULTRACAPACITOR POWER, MAXWELL TECHNOLOGIES		BMOD0250 P016	C8	1

PARTS LIST

REVISED: 11/03/09
DISCARD ALL PRIOR DWGS

AutoCAD Drawing/Sketch:
Printed Copies May Be Obsolete:
Validate Prior to use.

-001	-	-	DART
- NO.	HULL NO.	NEXT ASSY	USED ON

APPLICATION

UNLESS OTHERWISE SPECIFIED: DIMENSIONS ARE IN INCHES
TOLERANCES
DECIMALS .XX ±.05 .XXX ±.010
ANGULAR ±.05
DO NOT SCALE DRAWING

CONFIGURATION MGT. APPROVAL

FINISH

SAIC From Science to Solutions

CONTRACT NO -

APPROVALS	DATE
DRAWN BY D.JAYNES	DATE 02/28/08
CHECKED BY	DATE
ENGINEER APPROVAL	DATE
NDBC PROJ ENGR	DATE
APPROVED	DATE

NATIONAL DATA BUOY CENTER
John C. Stennis Space Center
Stennis Space Center, Mississippi 39529-6000

TITLE
GOES HDR TUBE EQUIPMENT INSTALLATION

SIZE	CAGE CODE	DRAWING NO	REV
D		840000	-

SCALE 1/1 | RELEASE DATE: X | SHEET 1 OF 1

PLOTTED ON: 2/2/2010 1:56:35 PM S:\vlb\SK-02.3F0-001 NOOSS OPT-PROD BUOY\AutoCad Buoy & Payload Sys Dwgs\02.3F0840000.dwg