THE INFORMATION CONTAINED IN THIS DRAWING IS THE SOLE PROPERTY OF MBARI ANY REPRODUCTION IN PART OR WHOLE WITHOUT THE WRITTEN PERMISSION OF MBARI IS PROHIBITED.

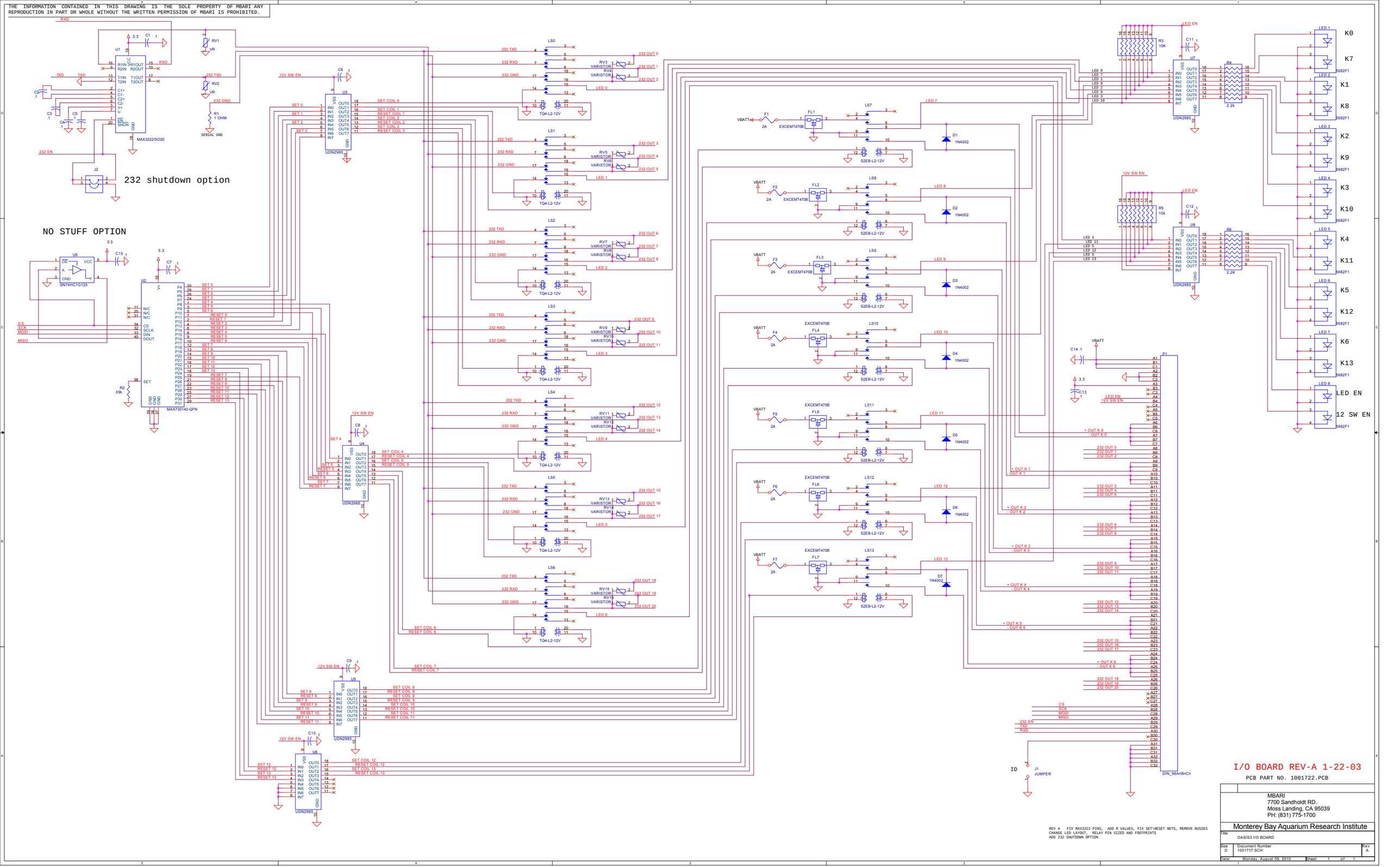

REV A FIX MAX3222 PINS, ADD R VALUES, FIX SET\RESET NETS, REMOVE BUSSES
CHANGE LED LAYOUT, RELAY PIN SIZES AND FOOTPRINTS
ADD 232 SHUTDOWN OPTION

I/O BOARD REV-A 1-22-03

PCB PART NO. 1001722.PCB

MBARI
7700 Sandholdt RD.
Moss Landing, CA 95039
PH: (831) 775-1700

Monterey Bay Aquarium Research Institute

Title	OASIS3 I/O BOARD	
Size D	Document Number 1001717.SCH	Rev A
Date: Monday, August 09, 2010	Sheet 1 of 1	