THE INFORMATION CONTAINED IN THIS DRAWING IS THE SOLE PROPERTY OF MBARI. ANY REPRODUCTION IN PART OR WHOLE WITHOUT THE WRITTEN PERMISSION OF MBARI IS PROHIBITED.

REVISIONS			
REV.	DESCRIPTION	DATE	APPROVED
	INITIAL RELEASE		

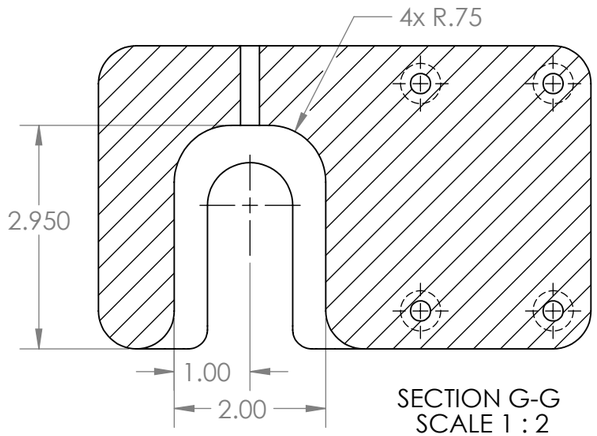

SECTION G-G
SCALE 1 : 2

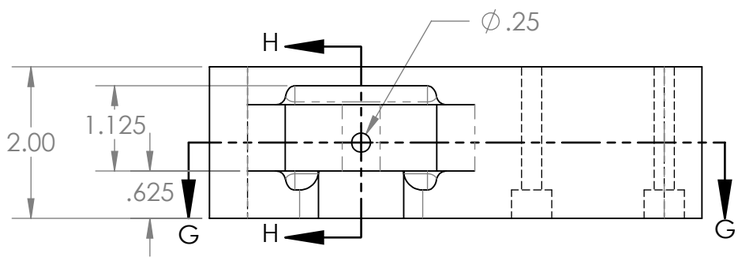

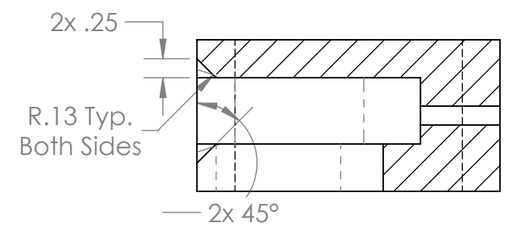

SECTION H-H
SCALE 1 : 2

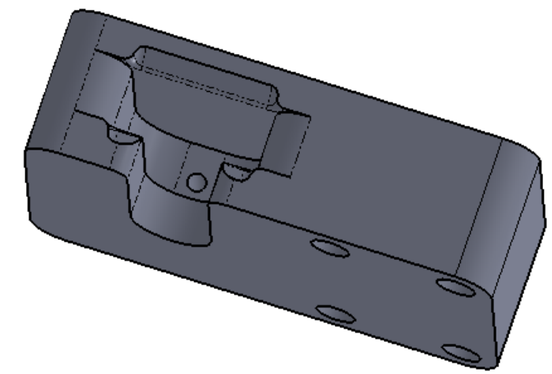

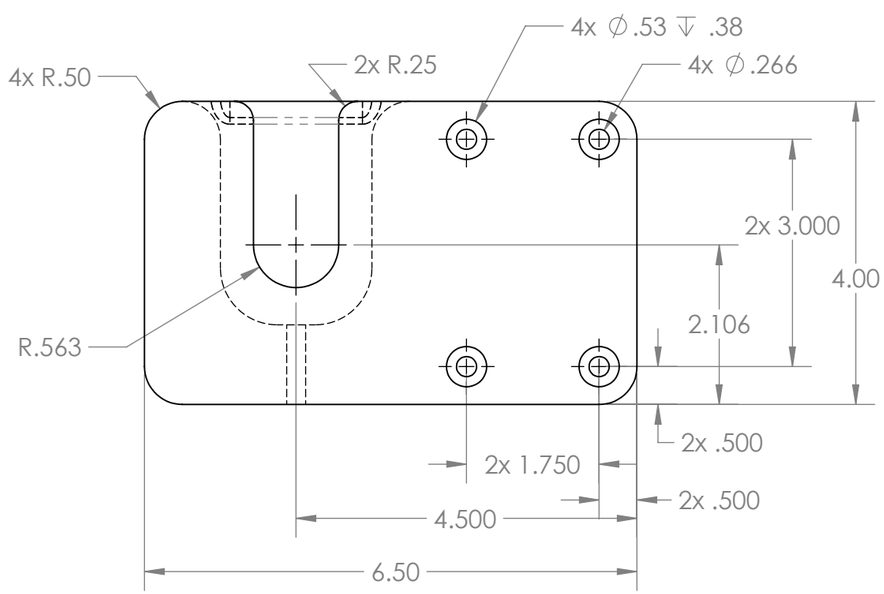

ITEM #	QTY.	MFR. #	Description	Material
2				
1	1		**Left Ladder Storage Receptacle**	**Acetal**

BILL OF MATERIALS

UNLESS OTHERWISE SPECIFIED TOLERANCES ARE:

1 PLACE DIM	2 PLACE DIM	3 PLACE DIM	ANGLES
±1/16	±.02	±.005	±1°

1. DIMENSIONS ARE IN INCHES
2. DIMENSION LIMITS HELD AFTER PLATING.
3. REMOVE BURRS AND SHARP EDGES .015 MAX.
4. MACHINED FILLET RADII .0150-.030.
5. MACHINED DIAMETERS ON A COMMON CENTERLINE CONCENTRIC WITHIN .OO5
6. PERPENDICULARITY & PARALLELISM OF MACHINED SURFACES .002 PER INCH. MAX .012 INCHES FOR SINGLE SURFACE.

APPROVALS		DATE
DRAWN	F. Shane	03Jan2013
ENGINEER	F. Shane	03Jan2013
CHECKED		
PROJECT NO.	300079	
PROJECT	Boarding Platform	
WEIGHT		

Monterey Bay Aquarium Research Institute
7700 Sandholdt RD.
Moss Landing, CA 95039
PH: (408) 775-1700

Rachel Carson
Left Ladder Storage Receptacle

SIZE	DWG. NO.	REV.
B	P13L-3000079-13	
SCALE NONE	CAD FILE: Project Library\300079\Rachel Carson	SHEET 1 OF 1

NEXT ASSY	USED ON
APPLICATION	DO NOT SCALE DRAWING