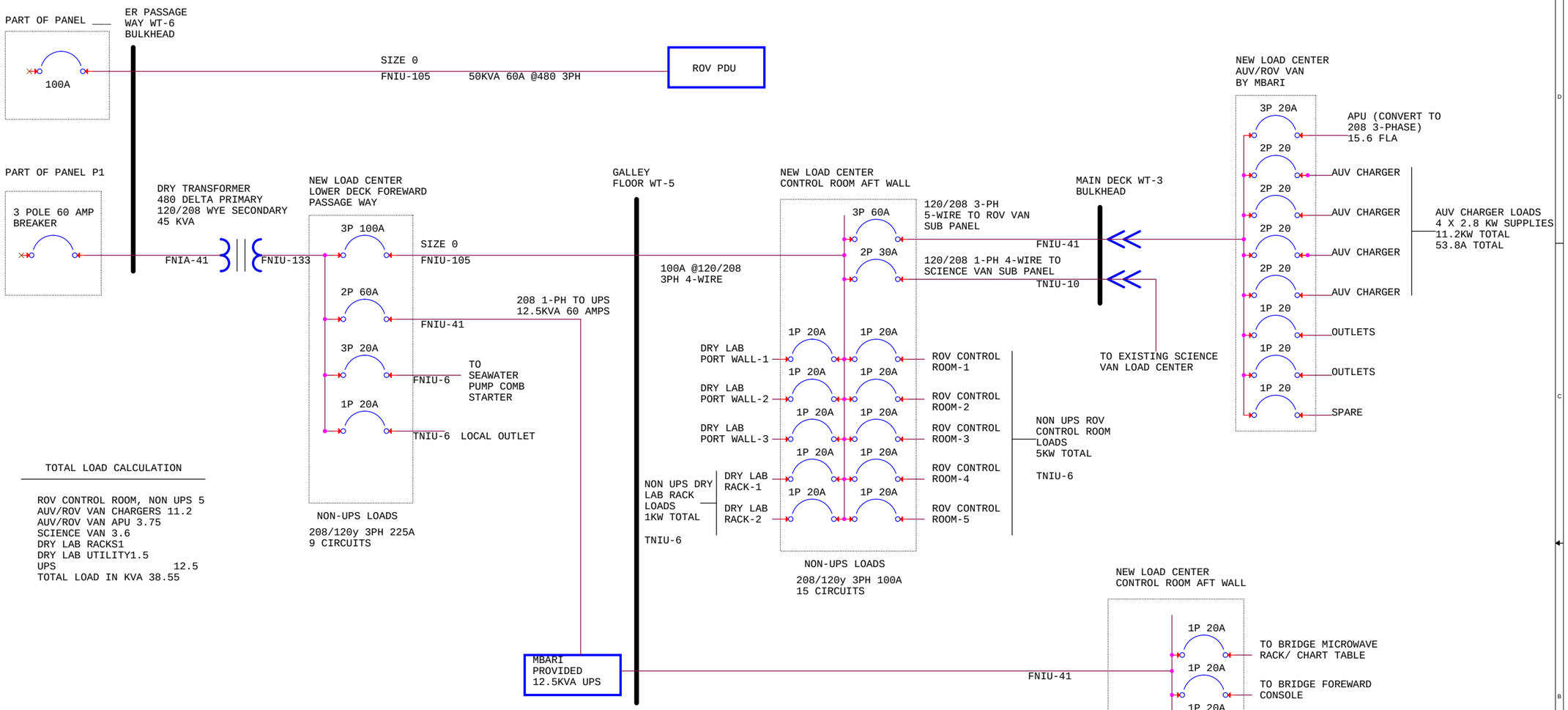

TOTAL LOAD CALCULATION

ROV CONTROL ROOM, NON UPS 5
AUV/ROV VAN CHARGERS 11.2
AUV/ROV VAN APU 3.75
SCIENCE VAN 3.6
DRY LAB RACKS1
DRY LAB UTILITY1.5
UPS 12.5
TOTAL LOAD IN KVA 38.55

Cable Type	cond	AWG	OD	stuffing tube	packing	MFG size	drill size	Notes
TNIU-6	3	12	0.38	MS 16455-2	M19622/17-01	2C	3/4 NPT	
TNIU-10	3	10	0.45	MS 16455-2	M19622/17-01	2E	3/4 NPT	
FNIU-41	4	4	0.94	MS 16455-5	M19622/20-0006	5E	1-1/2 NPT	
FNIU-105	4	1/0	1.32	MS 16455-6	M19622/21-0006	6B1	2 NPT	
W	4	3/0	1.95	MS 16455-8	MS16192-8	8B4	3 NPT	Shore-Tie flexible
FINU-6	4	12	0.41	MS 16455-2	M19622/17-01	2E	3/4 NPT	

3P 100	1
3P 20	1
3P 60	1
2P 60	1
2P 30	1
1P 20	26

DRAFT 2/7/2012

Title: RACHEL CARSON POWER DISTRIBUTION SYSTEM ADDITIONS

Size: C | Document Number: <Doc> | Rev: -

Date: Thursday, February 16, 2012 | Sheet 1 of 1