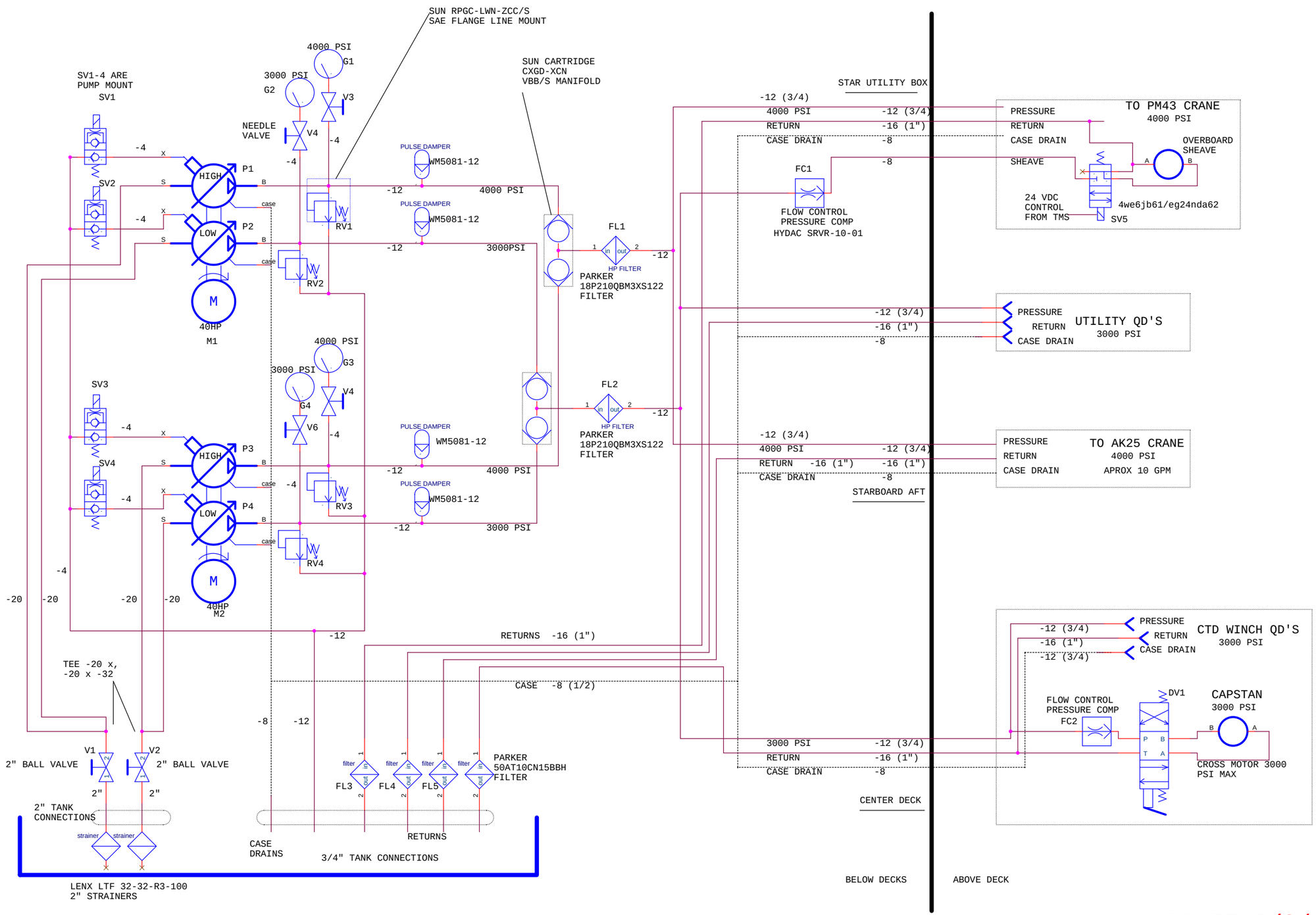

DRAFT 5/3/2012

Title	R/V RACHEL CARSON HYDRAULIC SYSTEM
Size C	Document Number <Doc>
Rev	-
Date:	Friday, May 04, 2012
Sheet	1 of 2