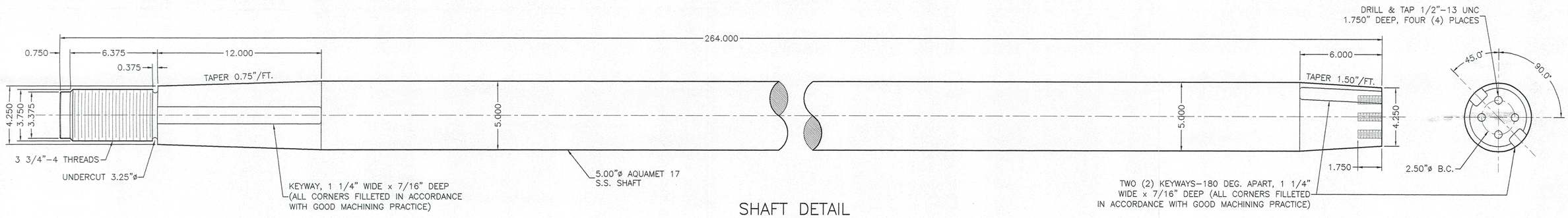

SHAFT DETAIL

(2) REQUIRED
SCALE: 3" = 1'-0"

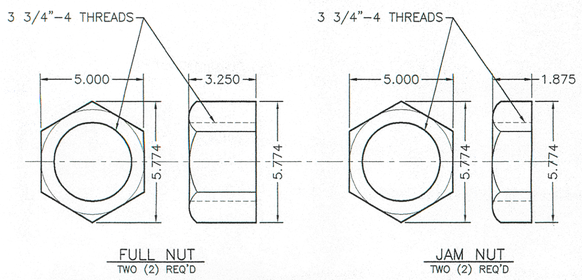

FULL NUT
TWO (2) REQ'D

JAM NUT
TWO (2) REQ'D

PROP SHAFT NUTS

SCALE: 3" = 1'-0"

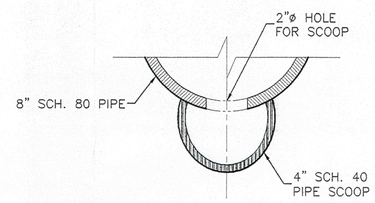

SECTION 12-D

STERN TUBE SCOOP DETAIL
SCALE: 3" = 1'-0"

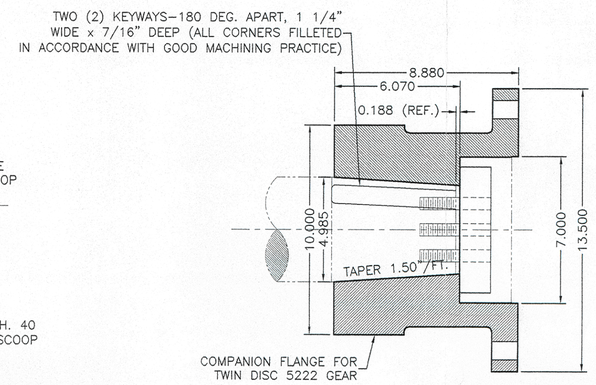

GEAR COUPLING DETAIL

FEILD VERIFY COUPLING SIZE BEFORE MACHINING
SCALE: 3" = 1'-0"

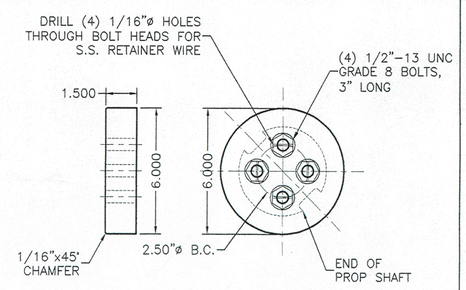

RETAINER PLATE DETAIL

(2) REQUIRED
SCALE: 3" = 1'-0"

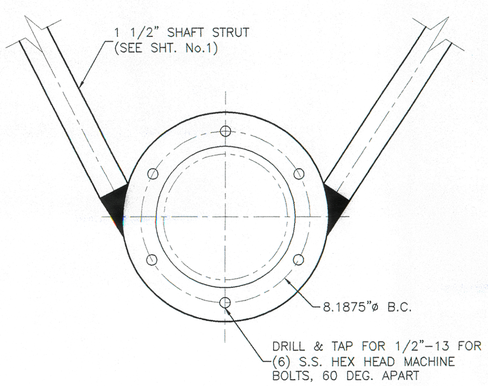

STRUT BARREL AFT END

SCALE: 3" = 1'-0"

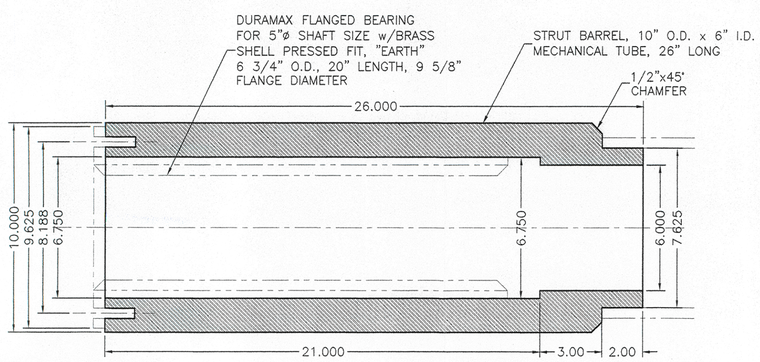

STRUT BARREL DETAIL

(2) REQUIRED
SCALE: 3" = 1'-0"

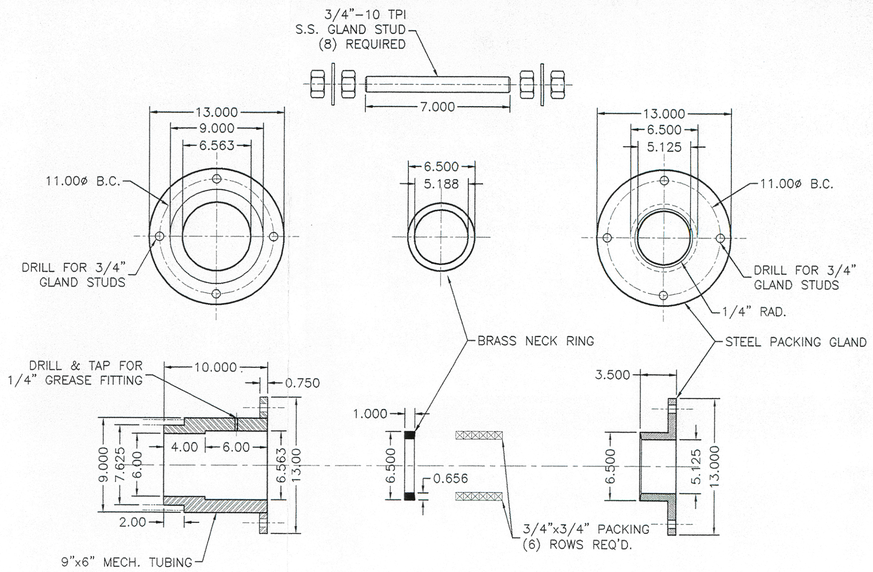

STUFFING BOX DETAIL

(2) REQUIRED
SCALE: 1 1/2" = 1'-0"

STERLING MARINE, LTD.		STERLING MARINE, LTD. 1150 SHADY LANE GULF BREEZE, FL 32563
DRAWN BY: T. J. CARVER	CHECKED BY:	136 FT. OFFSHORE SUPPLY VESSEL (LaFORCE SHIPYARD, INC. - HULL 137 & 138) PROPULSION SHAFTING ARRANGEMENT & DETAILS
APPROVED BY:	DWG. NO.	
DATE: 23 JULY 2003	CONTRACT NO.	
LaFORCE		