THE INFORMATION CONTAINED IN THIS DRAWING IS THE SOLE PROPERTY OF MBARI ANY REPRODUCTION IN PART OR WHOLE WITHOUT THE WRITTEN PERMISSION OF MBARI IS PROHIBITED.

REVISIONS			
REV.	DESCRIPTION	DATE	APPROVED
	INITIAL RELEASE	9/29/2011	

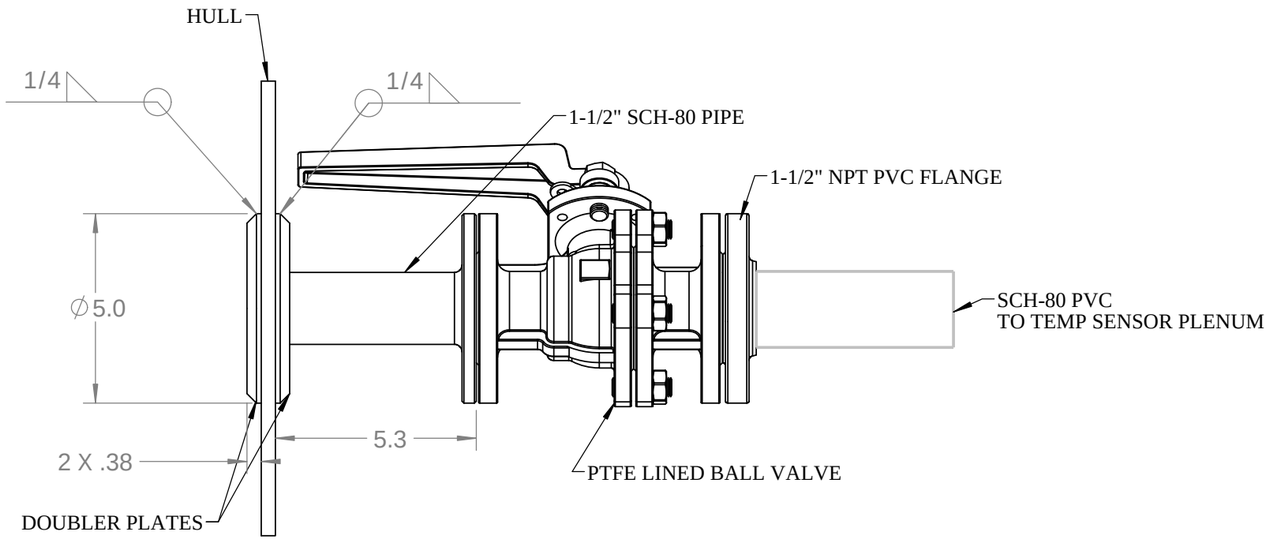

NEW SEAWATER INTAKE DETAIL VIEW

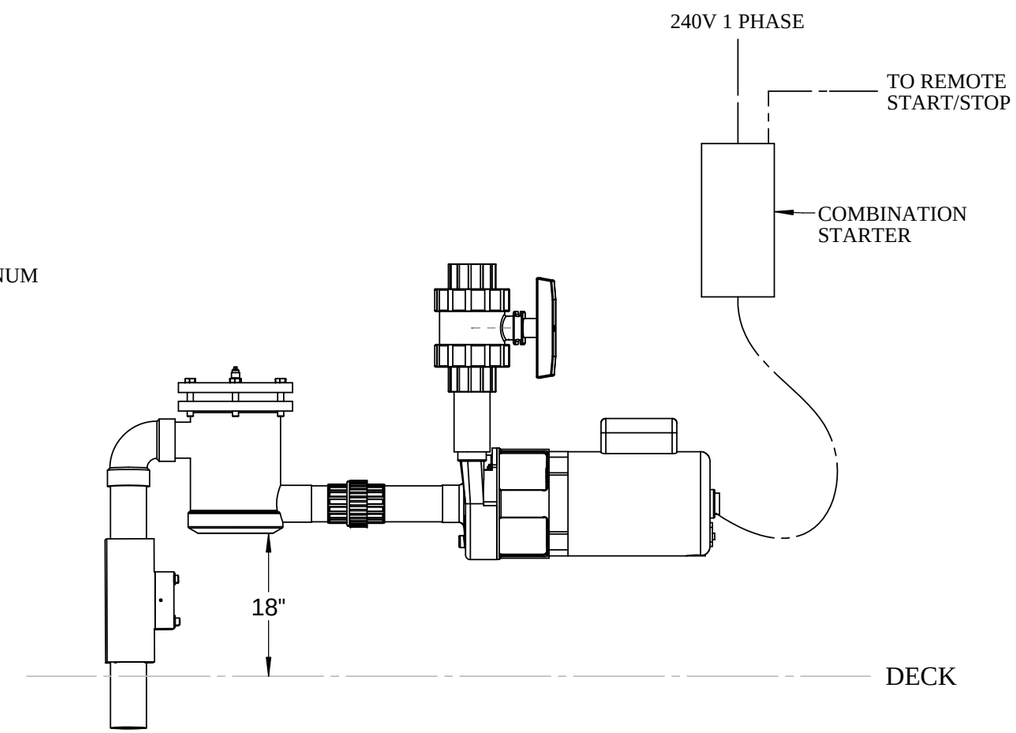

FRAME 16, STAR SIDE LOOKING STARBOARD
UNCONTAMINATED SEAWATER SYSTEM MACHINERY ARANGEMENT

NO SCALE

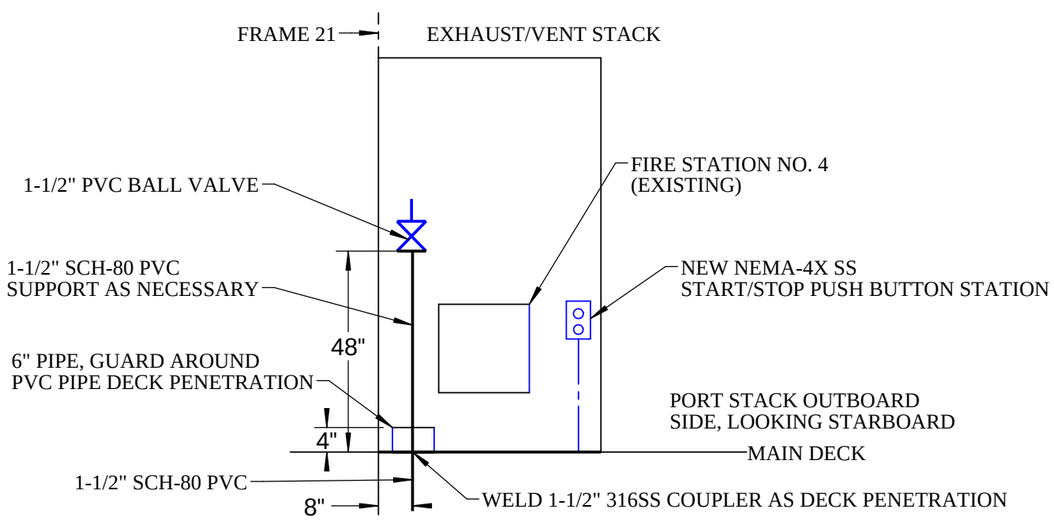

NEW UNCONTAMINATED SEAWATER
SYSTEM DECK PENETRATION DETAIL

NO SCALE

GENERAL NOTES

1. ALL PIPING SHALL BE IN ACCORDANCE WITH APPLICABL ABS & USCG REGLUATIONS AND PER CONTRACT SPECIFICATIONS
2. PIPING SHALL BE PROPERLY SUPPORTED AND ARRANGED SUCH THAT IT IS NOT NORMALLY USED AS A STEP OR RAIL.
3. DECK AND BULKHEAD PENETRATIONS SHALL BE REINFORCED WITH DOUBLER PLATES IN ACCORDANCE WITH ABS TULES.

BILL OF MATERIALS

Shop / Q.C.	
Inspector	
Shop Foreman	
Engineer	
NEXT ASSY Description	NEXT ASSY Number
Application	

UNLESS OTHERWISE SPECIFIED TOLERANCES ARE:

1 PLACE DIM ±1/16	2 PLACE DIM ±.02	3 PLACE DIM ±.005	ANGLES ±1°

1. DIMENSIONS ARE IN INCHES
2. DIMENSION LIMITS HELD AFTER PLATING.
3. REMOVE BURRS AND SHARP EDGES .015 MAX.
4. MACHINED FILLET RADII .0150-.030.
5. MACHINED DIAMETERS ON A COMMON CENTERLINE CONCENTRIC WITHIN .OO5
6. PERPENDICULARITY & PARALLELISM OF MACHINED SURFACES .002 PER INCH. MAX .012 INCHES FOR SINGLE SURFACE.

DO NOT SCALE DRAWING

APPROVALS		DATE
DRAWN	C OKUDA	9/29/2011
ENGINEER	C OKUDA	9/29/2011
CHECKED		
PROJECT NO.	RACHEL CARSON	
PROJECT	901125	
WEIGHT		

Monterey Bay Aquarium Research Institute
MBARI
7700 Sandholdt RD.
Moss Landing, CA 95039
PH: (831) 775-1700

R/V RACHEL CARSON UNCONTAMINATED SEAWATER PIPING DETAILS

SIZE	DWG. NO.	REV.
B	10020788DWG	

SCALE 1:2 | CAD FILE: MECH ENG ON TORNADO | SHEET 4 OF 4