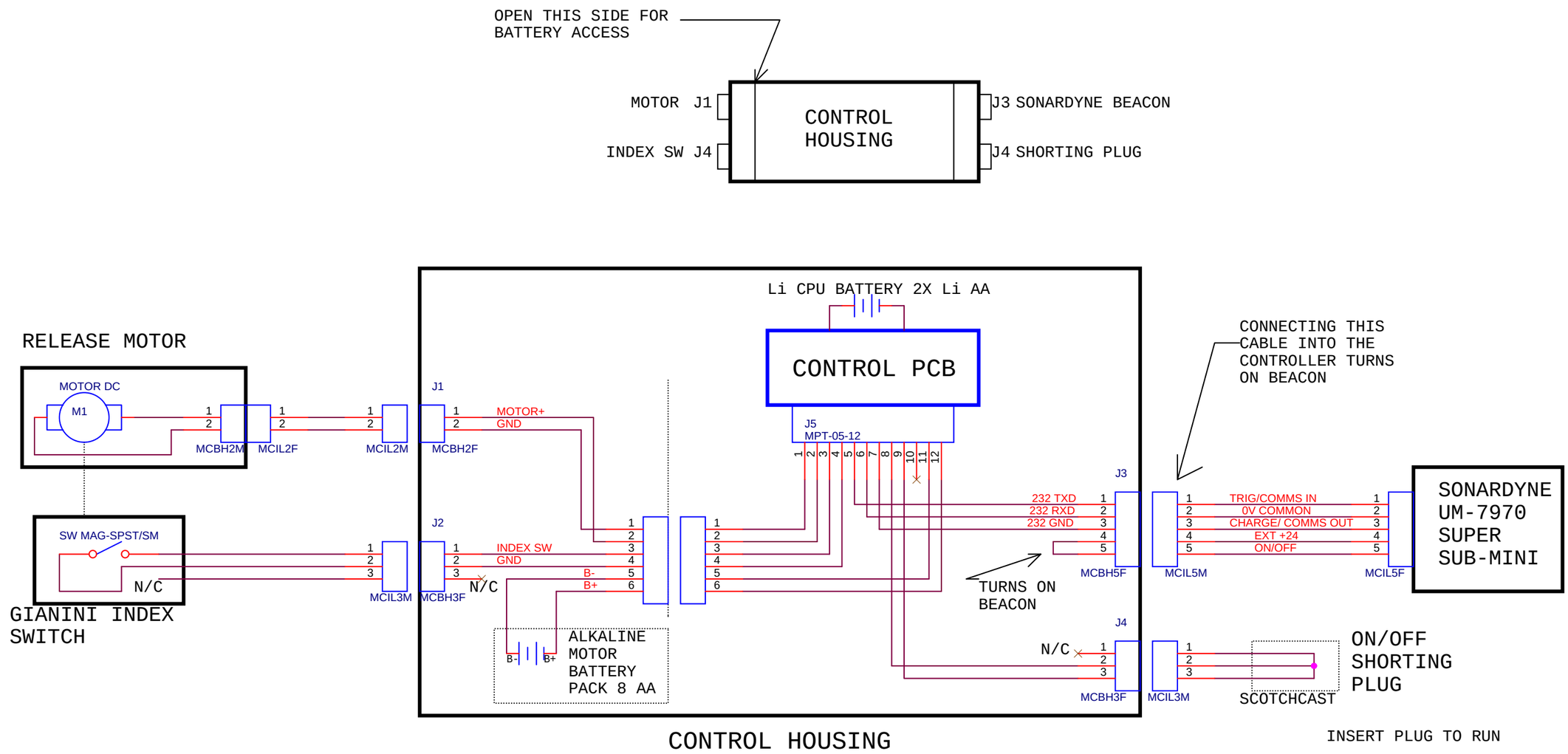

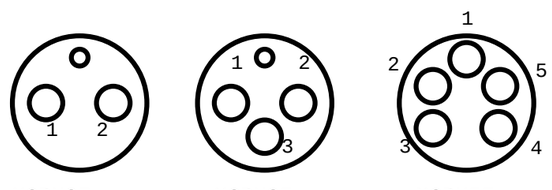

INITIAL RELEASE 3/10/09

Title	ELEVATOR RELEASE BLOCK DIAGRAM	
Size B	Document Number <Doc>	Rev -
Date: Monday, November 21, 2011	Sheet 1 of 1	