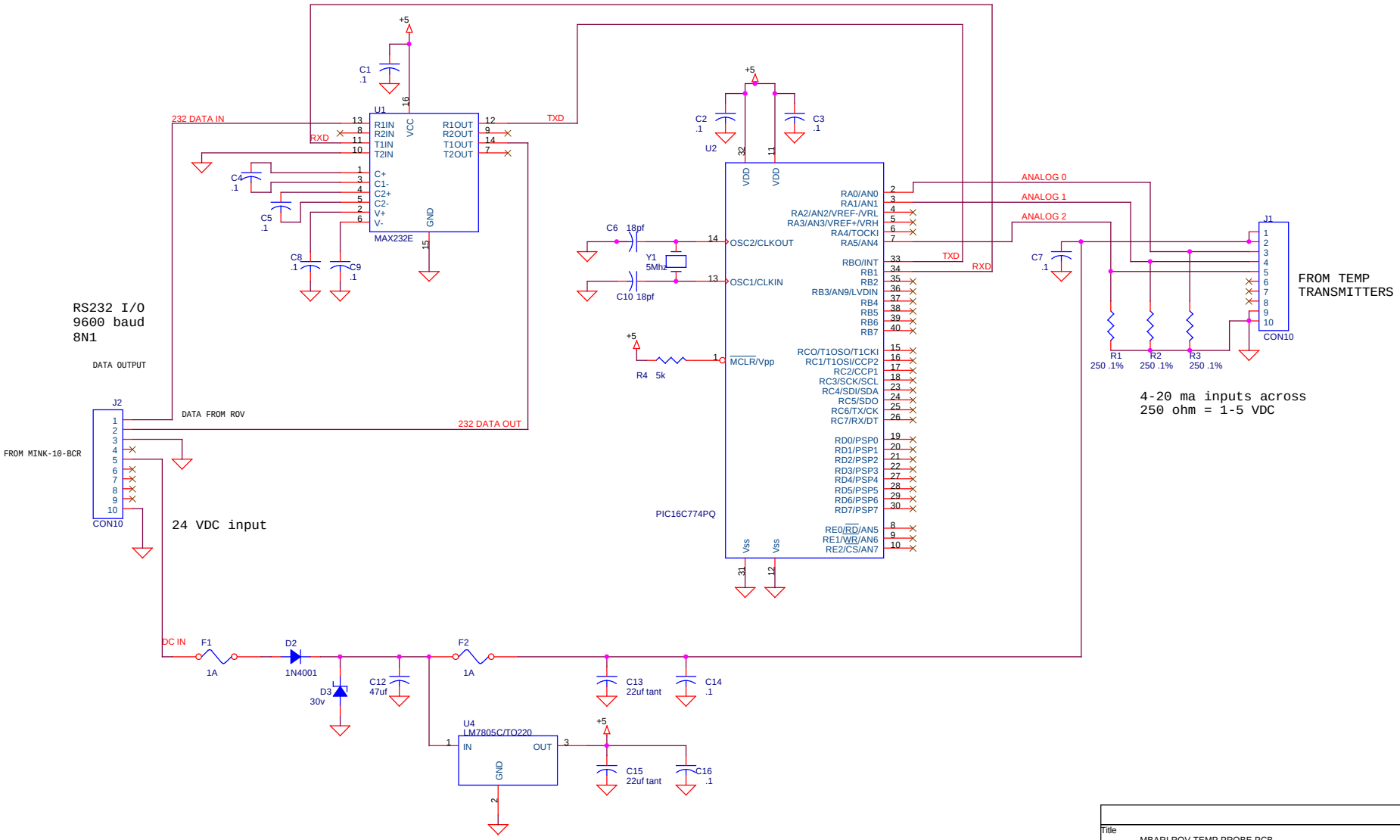

Title	MBARI ROV TEMP PROBE PCB	
Size B	Document Number <Doc>	Rev <RevCode>
Date: Thursday, July 13, 2000	Sheet 1 of 1	