COTS/IMC #	ITEM NO.	QTY.	DESCRIPTION	SPECIFICATION/ PART #/MRN	MANUFACTURER/ NSCM
	1	1	CONSTANT TENSION WINCH	CT–5	ALLIED SYSTEMS
	2	4	3/4–10UNC x 3" HEX HEAD BOLT STEEL	GRADE 5	
	3	8	ø3/4" FLAT WASHER STEEL	GRADE 5	
	4	4	ø3/4" LOCK WASHER STEEL	GRADE 5	
	5	4	3/4–10UNC HEX NUT STEEL	GRADE 5	
	6	1	WINCH MOUNTING BRACKET	039C001	BOT
	7	1	4 PORT HYDRAULIC BULKHEAD	039C008	BOT
	8	1	HIAB 200 SEA CRANE		HIAB
	10	1	HYDRAULIC HOSE CLAMP	H61900	BEHRINGER
	11	1	HYDRAULIC HOSE CLAMP	H41050	BEHRINGER
	13	1	130V, 500W FLOODLIGHT	J500W/130V	STANPRO
	14	2	5/16"–18 x HEX HEAD BOLT	SS	
	15	4	ø5/16" FLAT WASHER	SS	
	16	2	ø5/16" LOCK WASHER	SS	
	17	2	5/16"–18 HEX NUT	SS	
	18	1	4 TON WIRE ROPE SHEAVE	SB4S8BS	JOHNSON
	19	1	WIRE ROPE SHEAVE PIN	039C009	BOT
	20	1	WIRE ROPE SHEAVE BUSHING	039C010	BOT
	21	1	3/4"–10UNC HEX NUT	SS	
	22	1	QUICK RELEASE PIN	233–805	SPAENAUR
	23	1	CONSTANT TENSION SWITCH	47522	ALLIED SYSTEMS
	24	4	1/2"–13UNC x 1.5" HEX HEAD BOLT	SS	
	25	8	ø1/2" FLAT WASHER	SS	
	26	4	ø1/2" LOCK WASHER	SS	
	27	4	1/2"–13UNC HEX NUT	SS	
	28	1	CAT–TRACK TOP TRAY	039C005	BOT
	29	1	CAT–TRACK BOTTOM TRAY	039C004	BOT
	30	1	47 LINK CAT–TRACK		IGUS
			4040–11–135–0–NC		
	31	1	CAT–TRACK FIRST EXTENSION GUIDE	039C006	BOT
	32	2	CAT–TRACK SECOND EXTENSION GUIDE	039C007	BOT
	33		CAPTURE MECHANISM		BOT
	34	1	LOCKING PIN	875 1561	HIAB
	35	1	PIN	999 6401	HIAB

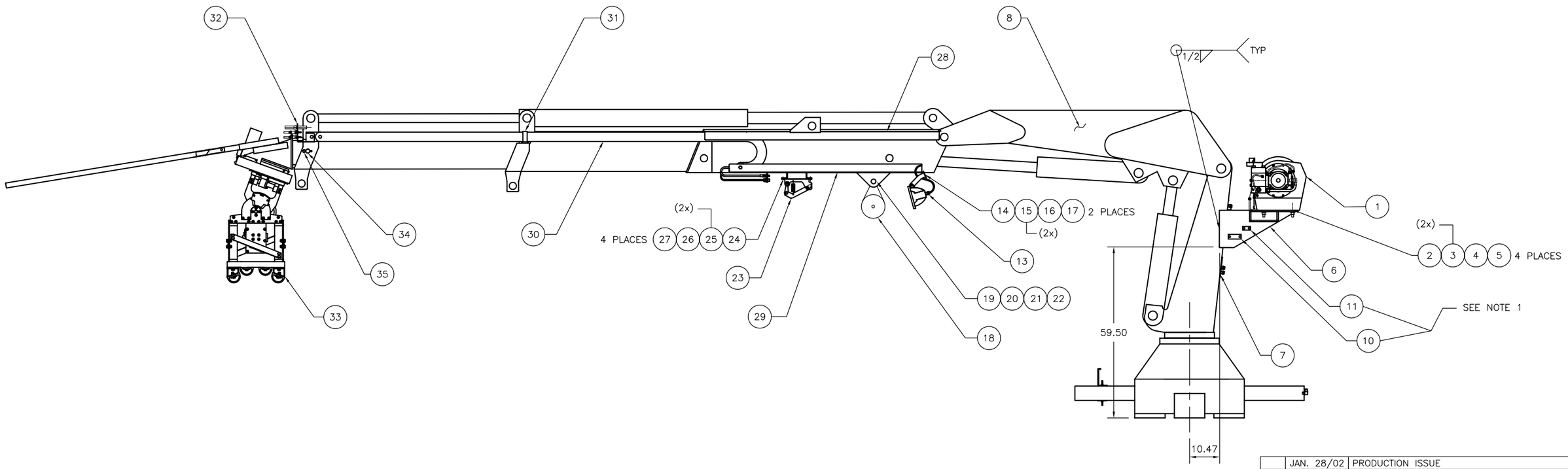

NOTES:

1. PARTS LOCATED ON THE OTHER SIDE OF CRANE ONLY
2. SYSTEM MODEL # RACAL–LRS–1
3. SYSTEM SERIAL # 10144

REV.	DATE	REMARKS
	JAN. 28/02	PRODUCTION ISSUE

REVISIONS

NSCM

UNLESS OTHERWISE NOTED
1. DIMENSIONS IN INCHES
2. X.X ± 0.025"
3. X.XX ± 0.010"
4. X.XXX ± 0.003"
5. FRACTIONS ± 1/32"
6. ANGLES ± 1/2°
7. ECCENTRICITY .003 MAX
8. FLATNESS 0.003" T.I.R.
9. SURFACE FINISH 125√
10. BREAK EDGES

THIRD ANGLE

BROOKE OCEAN TECHNOLOGY LTD.
50 THORNHILL DRIVE, UNIT 11
DARTMOUTH, NOVA SCOTIA
CANADA B3B 1S1
TEL: (902) 468–2928 FAX: (902) 468–1388

DESIGNED PB
DRAWN BB
CHECKED PB
APPROVED GL
QA

PROJECT: RACAL AUV LRS

TITLE: HIAB CRANE CRANE MODIFICATIONS

REVISION: B

PROJECT NO. 0039
DRAWING NO. 039–C–0–00
SCALE 1:35
DATE JAN. 28/02
SHEET 1 OF 1

THE INFORMATION CONTAINED IN THIS DOCUMENT IS CONFIDENTIAL AND SHALL NOT BE MADE PUBLIC, OR COPIED, OR USED AS THE BASIS FOR THE MANUFACTURE OR SALE OF ITEMS UNLESS SPECIFICALLY AUTHORIZED IN WRITING BY BOT. THIS DOCUMENT IS THE PROPERTY OF BOT AND IS SUBJECT TO RETURN ON DEMAND.