THE INFORMATION CONTAINED IN THIS DRAWING IS THE SOLE PROPERTY OF MBARI. ANY REPRODUCTION IN PART OR WHOLE WITHOUT THE WRITTEN PERMISSION OF MBARI IS PROHIBITED.

REVISIONS			
REV.	DESCRIPTION	DATE	APPROVED
	INITIAL RELEASE		

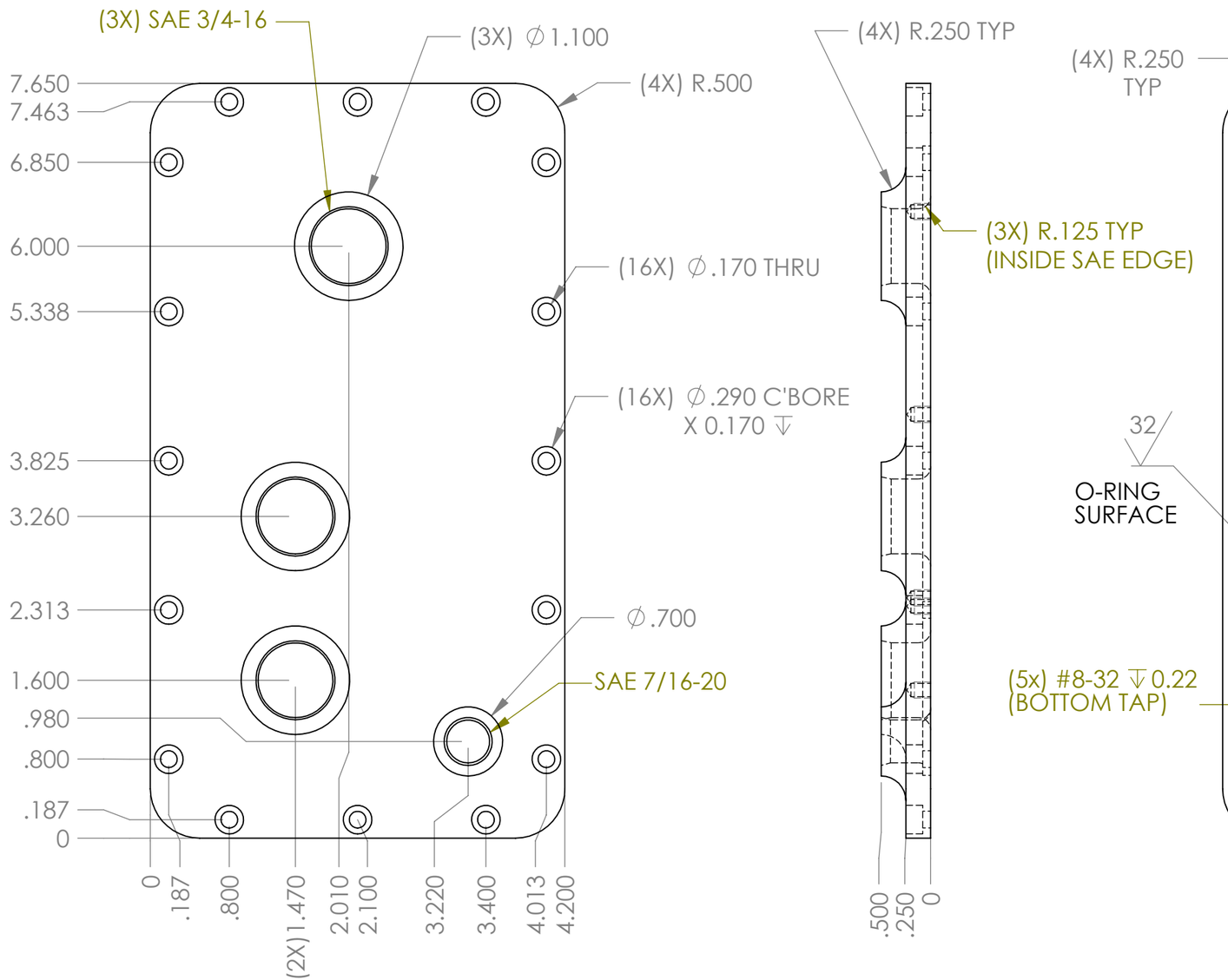

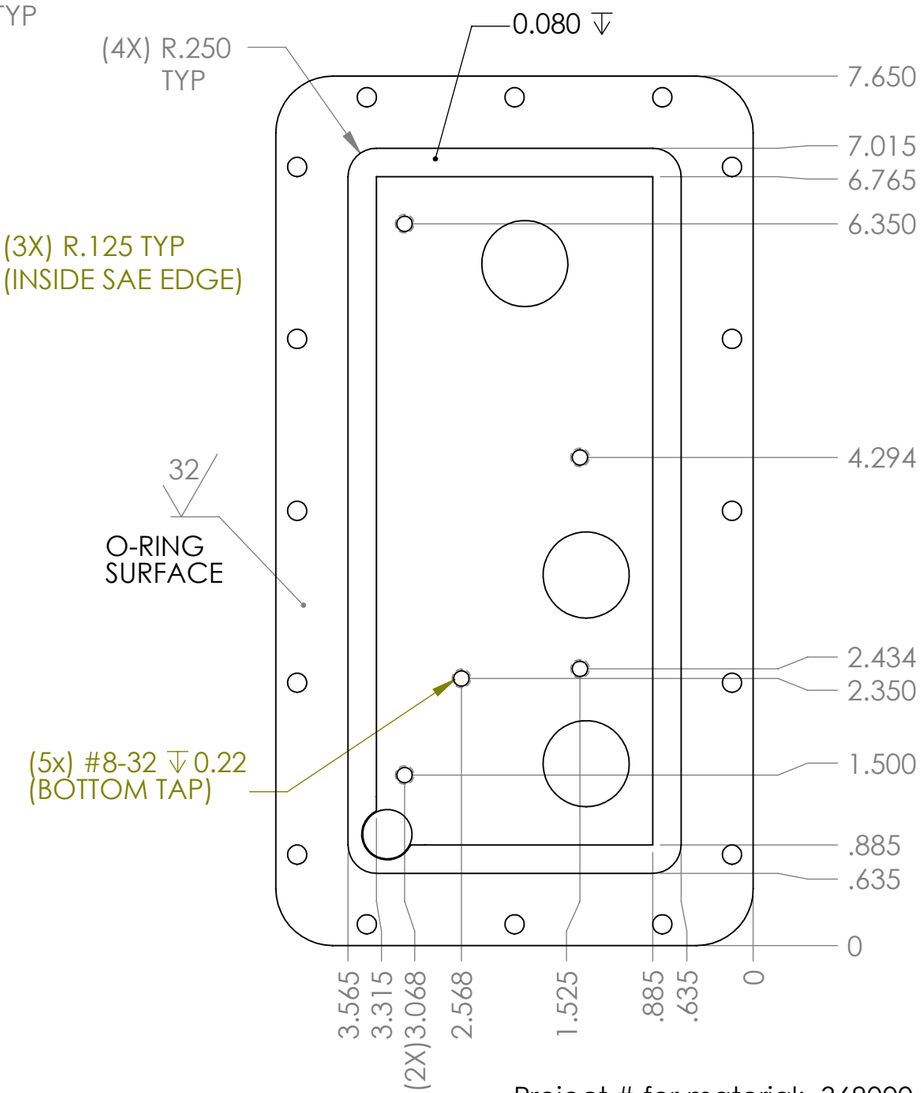

Project # for material: 368000 DMO AUV

ITEM NO.	QTY	PART NO.	DESCRIPTION	MATERIAL SPECIFICATION
1	10Ea.		BOTTOM LID - AUV MOTOR CONTROL BOX	AL 6061 - ANODIZED

BILL OF MATERIALS

UNLESS OTHERWISE SPECIFIED TOLERANCES ARE:

1 PLACE DIM	2 PLACE DIM	3 PLACE DIM	ANGLES
±1/16	±.02	±.005	±1°

1. DIMENSIONS ARE IN INCHES
2. DIMENSION LIMITS HELD AFTER PLATING.
3. REMOVE BURRS AND SHARP EDGES .015 MAX.
4. MACHINED FILLET RADII .0150-.030.
5. MACHINED DIAMETERS ON A COMMON CENTERLINE CONCENTRIC WITHIN .OO5
6. PERPENDICULARITY & PARALLELISM OF MACHINED SURFACES .002 PER INCH. MAX .012 INCHES FOR SINGLE SURFACE.

APPROVALS		DATE
DRAWN	R. FUHRMANN	06/04/02
ENGINEER	R. FUHRMANN	06/04/02
CHECKED		
PROJECT NO.	300078	
PROJECT	DMO AUV SUPPORT	
WEIGHT		

Monterey Bay Aquarium Research Institute
7700 Sandholdt RD.
Moss Landing, CA 95039
PH: (408) 775-1700

BOTTOM LID - AUV MOTOR CONTROL BOX

SIZE	DWG. NO.	REV.
B	1001504	

SCALE NONE | CAD FILE: TORNADO\ARCHIVE | SHEET 1 OF 1

NEXT ASSY	USED ON
APPLICATION	

DO NOT SCALE DRAWING

THE INFORMATION CONTAINED IN THIS DRAWING IS THE SOLE PROPERTY OF MBARI. ANY REPRODUCTION IN PART OR WHOLE WITHOUT THE WRITTEN PERMISSION OF MBARI IS PROHIBITED.

REVISIONS			
REV.	DESCRIPTION	DATE	APPROVED
	INITIAL RELEASE		

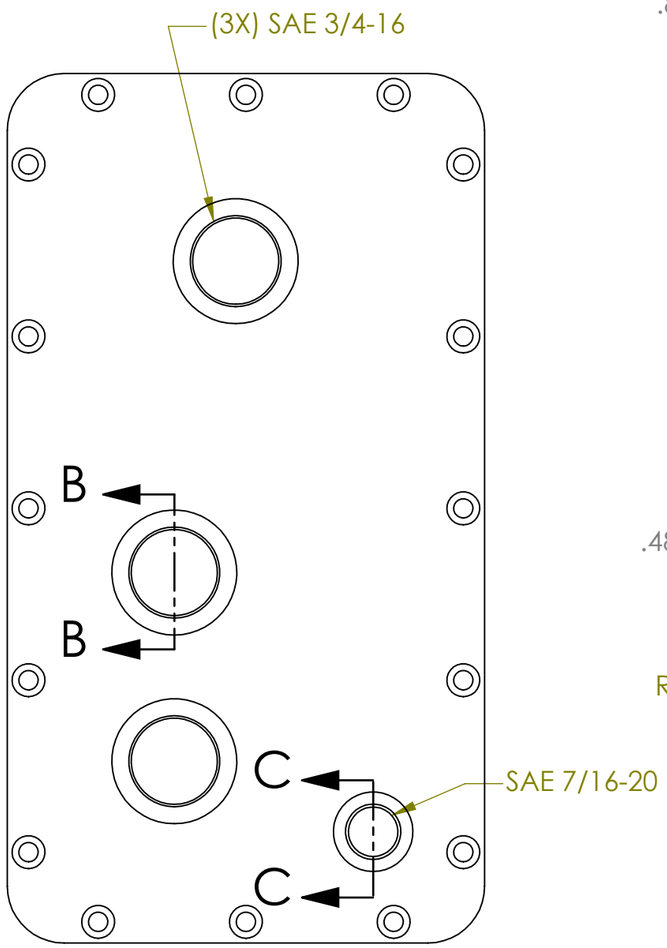

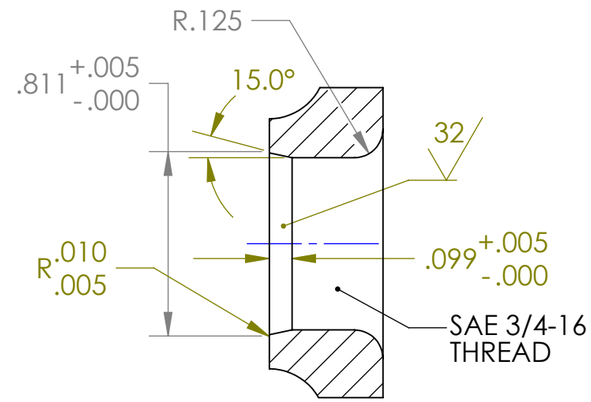

SECTION B-B
SCALE 1.5 : 1
SAE 3/4-16 O-RING SEAL

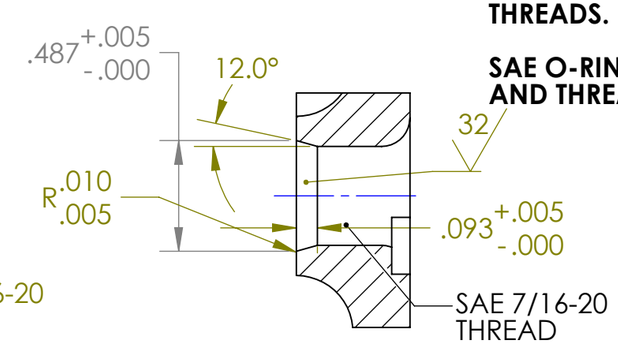

SECTION C-C
SCALE 1.5 : 1
SAE 7/16-20 O-RING SEAL

MASK HATCHED AREA AND DO NOT ANODIZE FACE, INCLUDING ALL #8-32 THREADS.

SAE O-RING SURFACES, FILLETS, AND THREADS WILL BE ANODIZED.

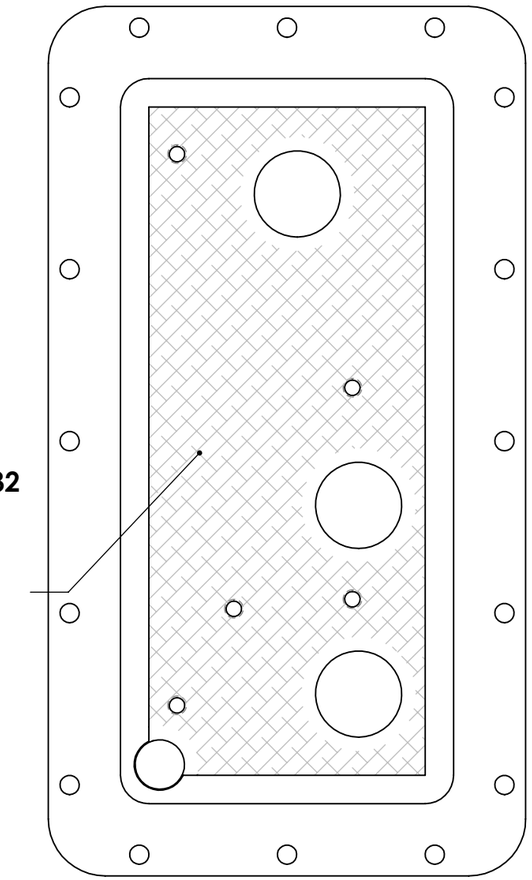

NOTES:
1. SAE 3/4-16 AND SAE 7/16-20 SEALING SURFACES SHALL BE CONCENTRIC WITH THREAD PITCH DIA. WITHIN 0.005 FULL INDICATOR READING

2. HARD ANODIZE IN ACCORDANCE WITH MIL-A-8625F TYPE III. SEAL WITH PTFE IMPREGNATION.

ITEM NO.	QTY	PART NO.	DESCRIPTION	MATERIAL SPECIFICATION
1	3 Ea.		BOTTOM LID - AUV MOTOR CONTROL BOX	AL 6061 - ANODIZED

BILL OF MATERIALS

UNLESS OTHERWISE SPECIFIED TOLERANCES ARE:

1 PLACE DIM	2 PLACE DIM	3 PLACE DIM	ANGLES
±1/16	±.02	±.005	±1°

1. DIMENSIONS ARE IN INCHES
2. DIMENSION LIMITS HELD AFTER PLATING.
3. REMOVE BURRS AND SHARP EDGES .015 MAX.
4. MACHINED FILLET RADII .0150-.030.
5. MACHINED DIAMETERS ON A COMMON CENTERLINE CONCENTRIC WITHIN .005
6. PERPENDICULARITY & PARALLELISM OF MACHINED SURFACES .002 PER INCH. MAX .012 INCHES FOR SINGLE SURFACE.

APPROVALS		DATE
DRAWN	R. FUHRMANN	06/05/02
ENGINEER	R. FUHRMANN	06/05/02
CHECKED		
PROJECT NO.	600024	
PROJECT	DORADO	
WEIGHT		

Monterey Bay Aquarium Research Institute
7700 Sandholdt RD.
Moss Landing, CA 95039
PH: (408) 775-1700

BOTTOM LID - AUV MOTOR CONTROL BOX

SIZE	DWG. NO.	REV.
B	1001504	

SCALE NONE | CAD FILE: TORNADO\ARCHIVE | SHEET 1 OF 1

NEXT ASSY	USED ON
APPLICATION	

DO NOT SCALE DRAWING