REVISIONS				
ZONE	REV	DESCRIPTION	DATE	APPROVED

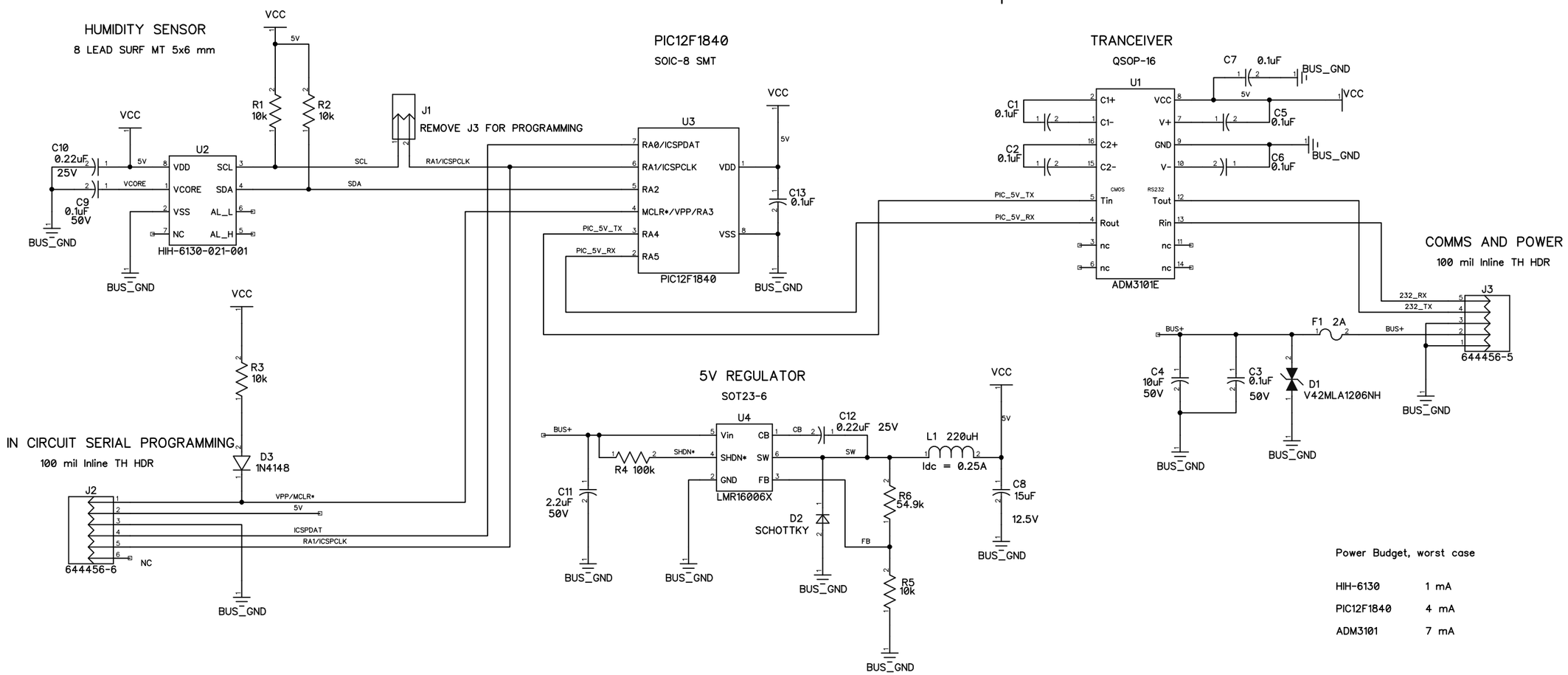

Power Budget, worst case

HIH-6130	1 mA
PIC12F1840	4 mA
ADM3101	7 mA

PIC12F HUMIDITY TO RS-232

SIZE	FSCM NO.	DWG NO.	REV
B			4

28 FEB 2015

SCALE

Sheet 1 Of 1