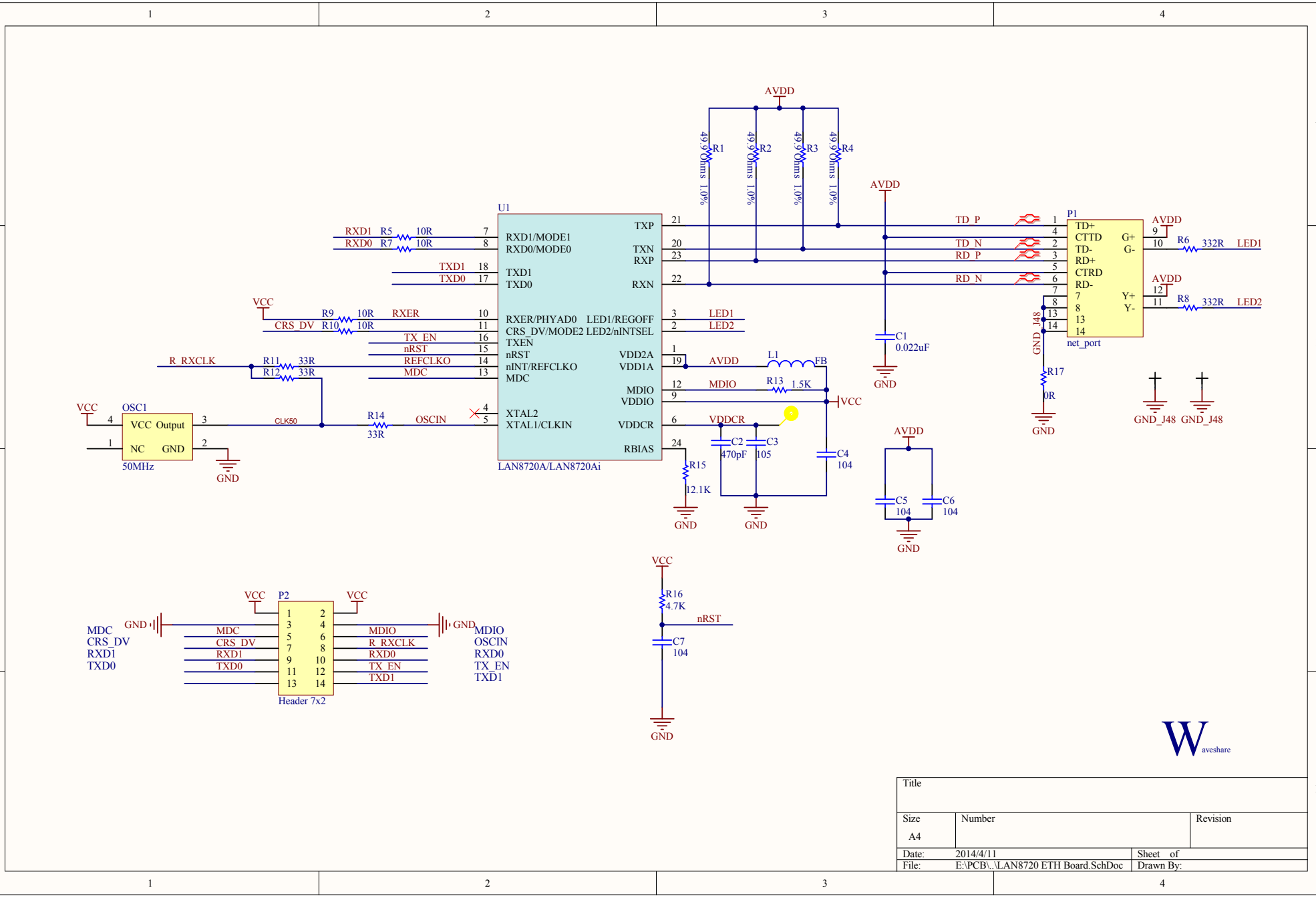

Title		
Size A4	Number	Revision
Date: 2014/4/11		Sheet of
File: E:\PCB\..\LAN8720 ETH Board.SchDoc		Drawn By: