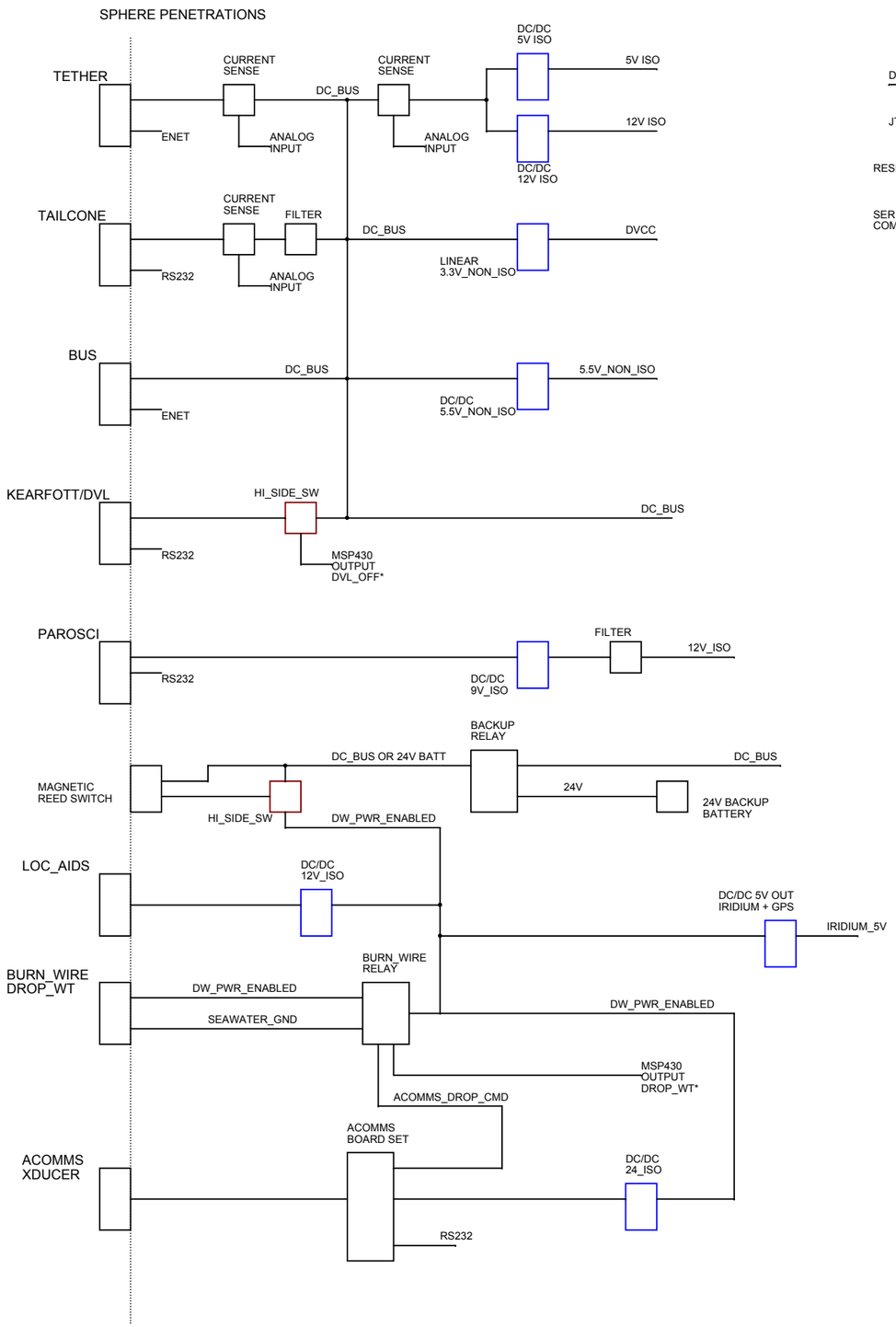

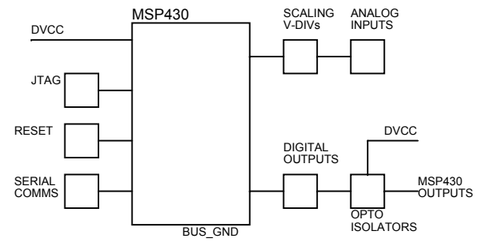

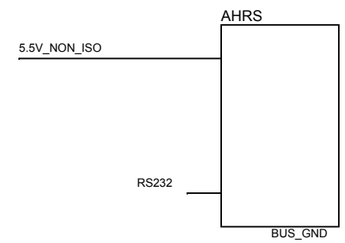

PC104 CARDs

1.6 GHz Atom CPU

Freewave Modem

12 Port Iso Serial

Iridium Beacon / BW

DG14 GPS

Trigger Board

Parvus Env Fan Board ?

MBARI Disk ?

Parvus Ethernet Switch ?

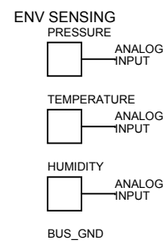

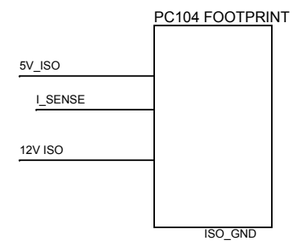

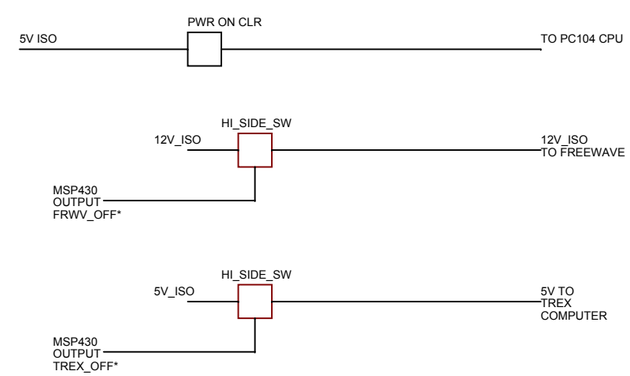

???
ACCOMS PWR
SERIAL CONNECTION
AND BURN WIRE SETUP

Title	**BLOCK DIAGRAM, AUV MOTHERBOARD**	
Size **B**	Document Number **10020068**	Rev **B**
Date: Wednesday, January 09, 2013	Sheet 1 of 1	