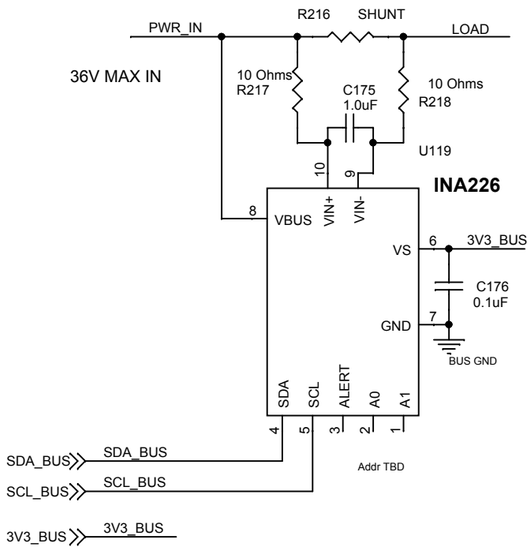

Possible Ancillary Stuff:

TI TMP112 Temp Sensor I2c (used on 41 cell board)

FAN BLOWER
2-3.5 VDC WIRE LEADS
9mm x 9mm x 3mm
92mA 0.28W
259-1518-ND

Title: SCH, AUV MOTHERBOARD, CURRENT SENSING		
Size: B	Document Number: 10020068	Rev: A
Date: Thursday, May 18, 2017	Sheet 1 of 1	

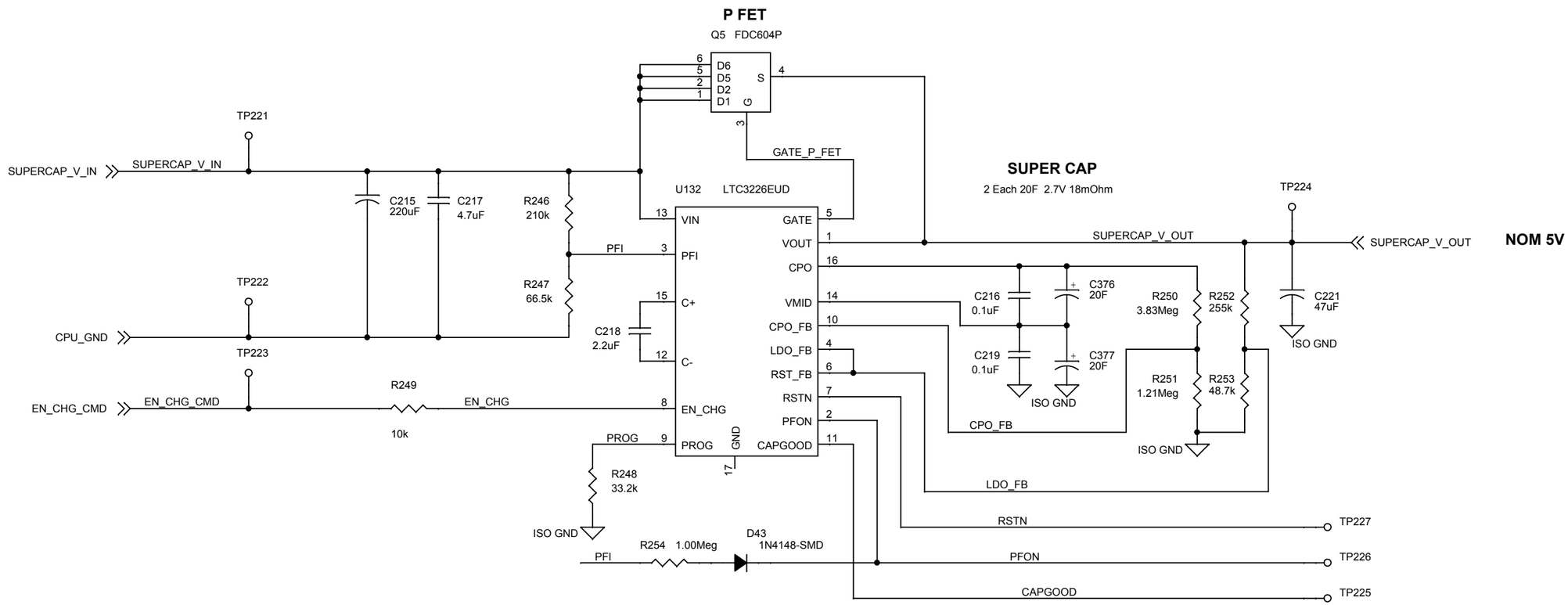

Title	SCH, SUPER CAP CHARGE / HOLD UP	
Size B	Document Number 10020068	Rev A
Date: Thursday, May 18, 2017	Sheet 1 of 1	

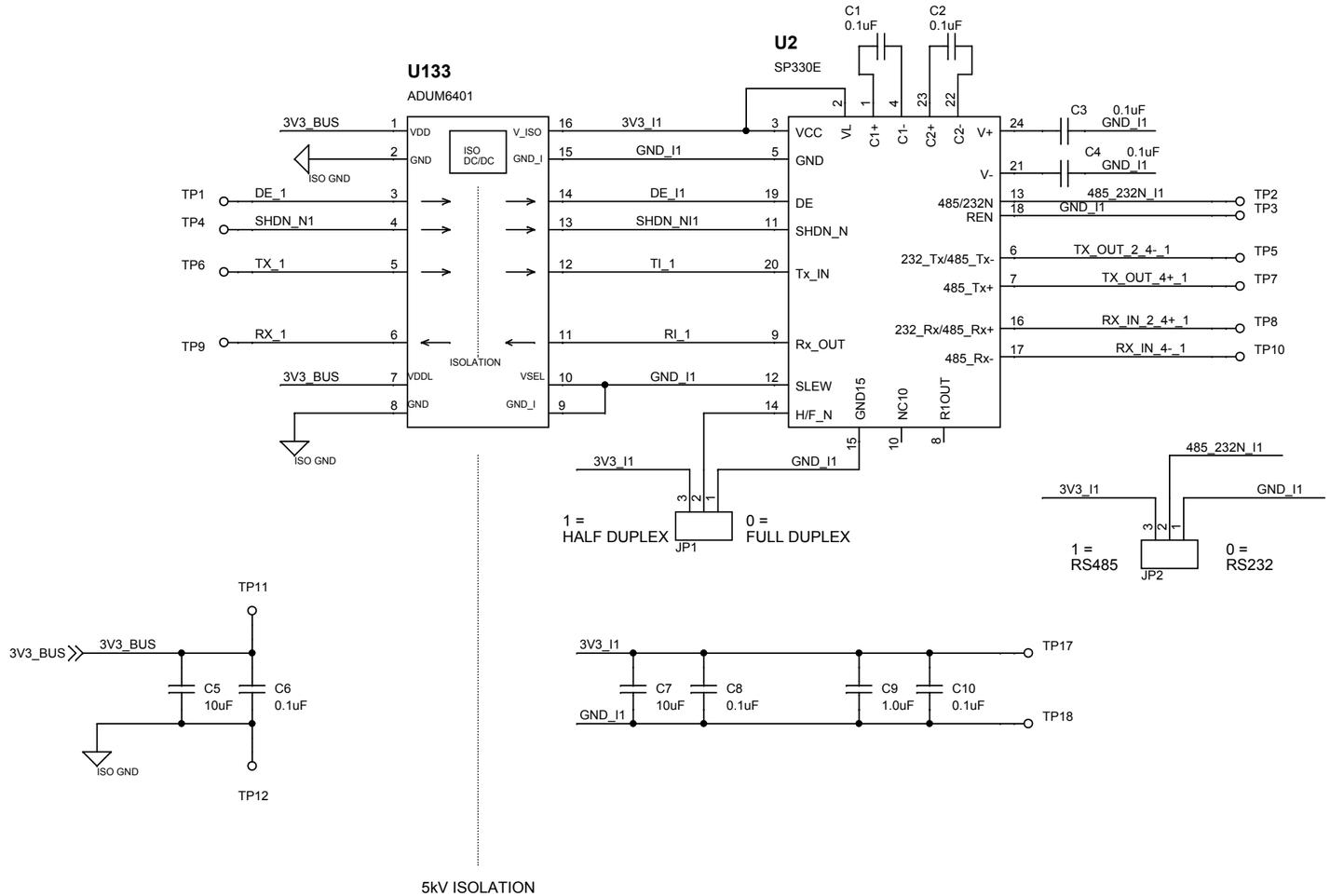

Title	SCH, AUV M'BOARD, COMMS_1	
Size B	Document Number 10020068	Rev A
Date: Thursday, May 18, 2017	Sheet 1 of 1	

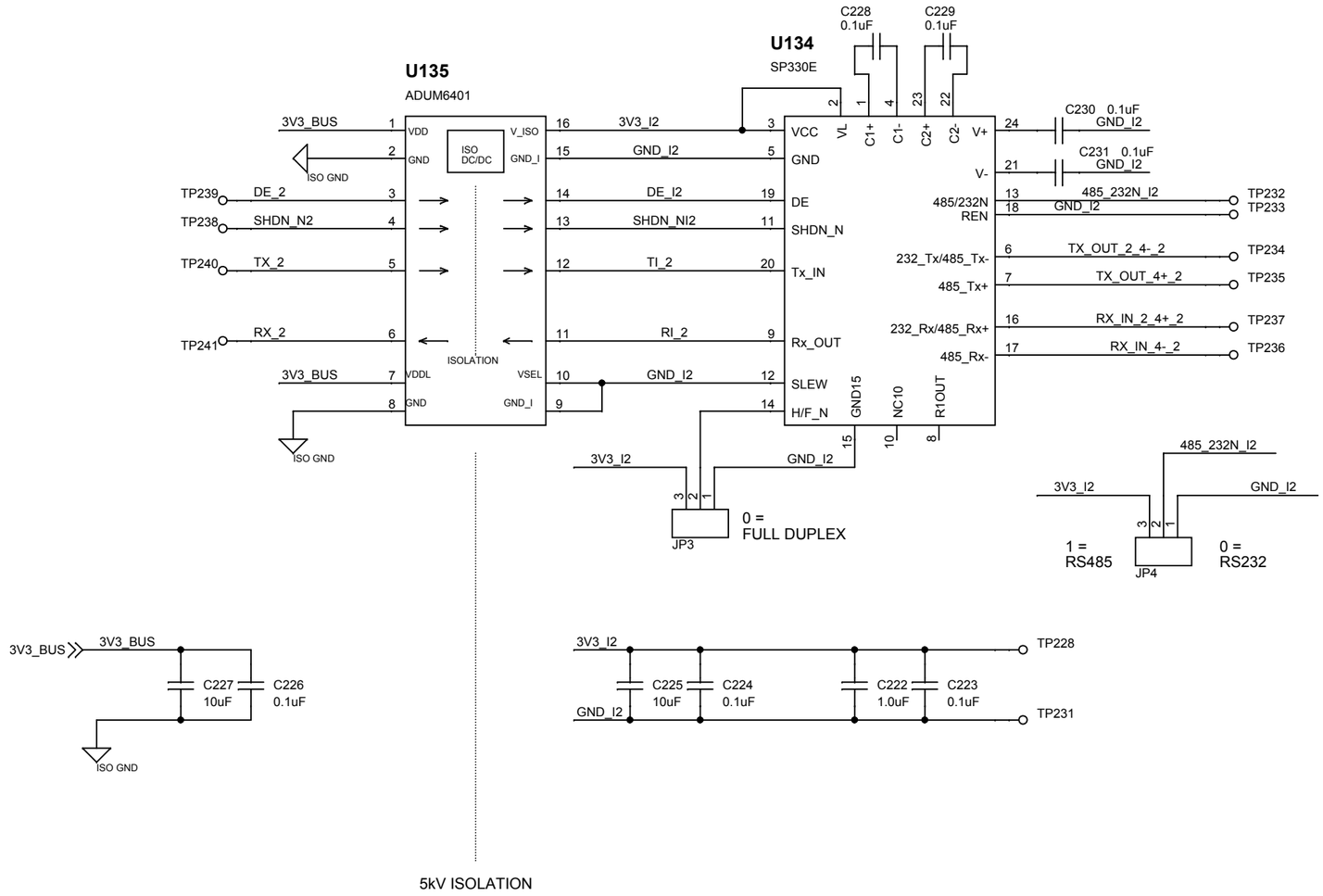

Title	SCH, AUV M'BOARD, COMMS_2	
Size B	Document Number 10020068	Rev A
Date: Thursday, May 18, 2017	Sheet 1 of 1	

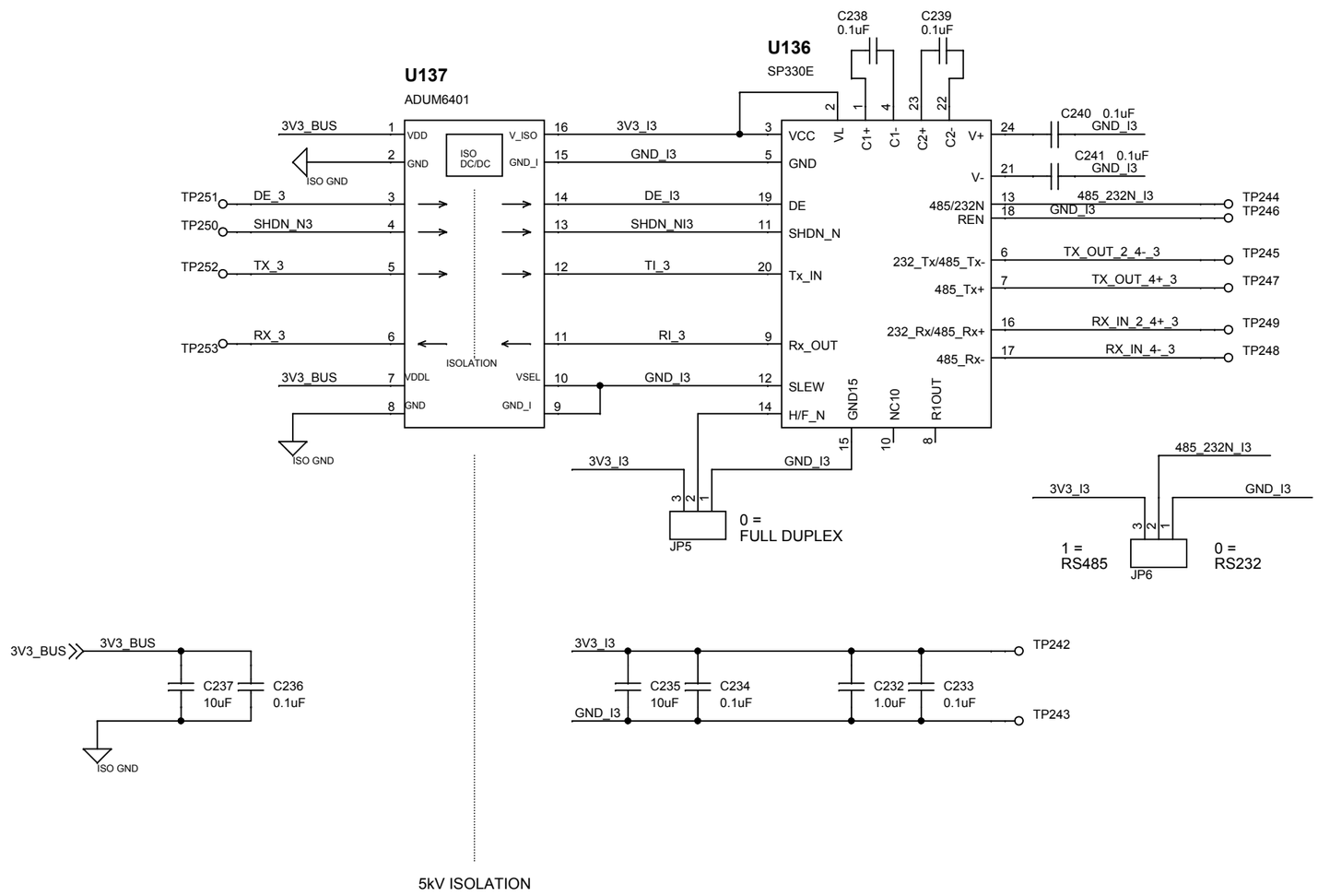

Title	SCH, AUV M'BOARD, COMMS_3	
Size B	Document Number 10020068	Rev A
Date: Thursday, May 18, 2017	Sheet 1 of 1	

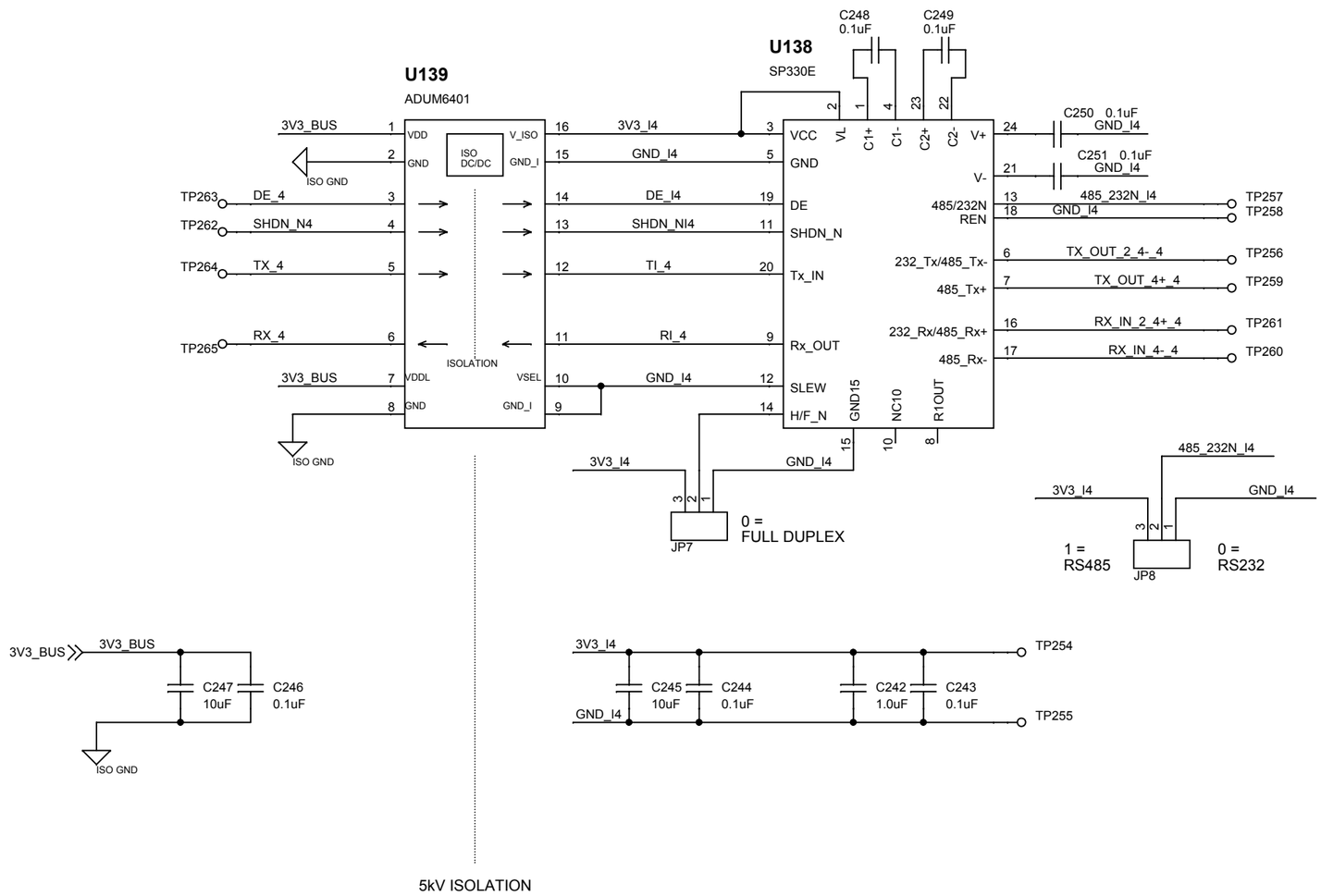

Title	SCH, AUV M'BOARD, COMMS_4	
Size B	Document Number 10020068	Rev A
Date: Thursday, May 18, 2017	Sheet 1 of 1	

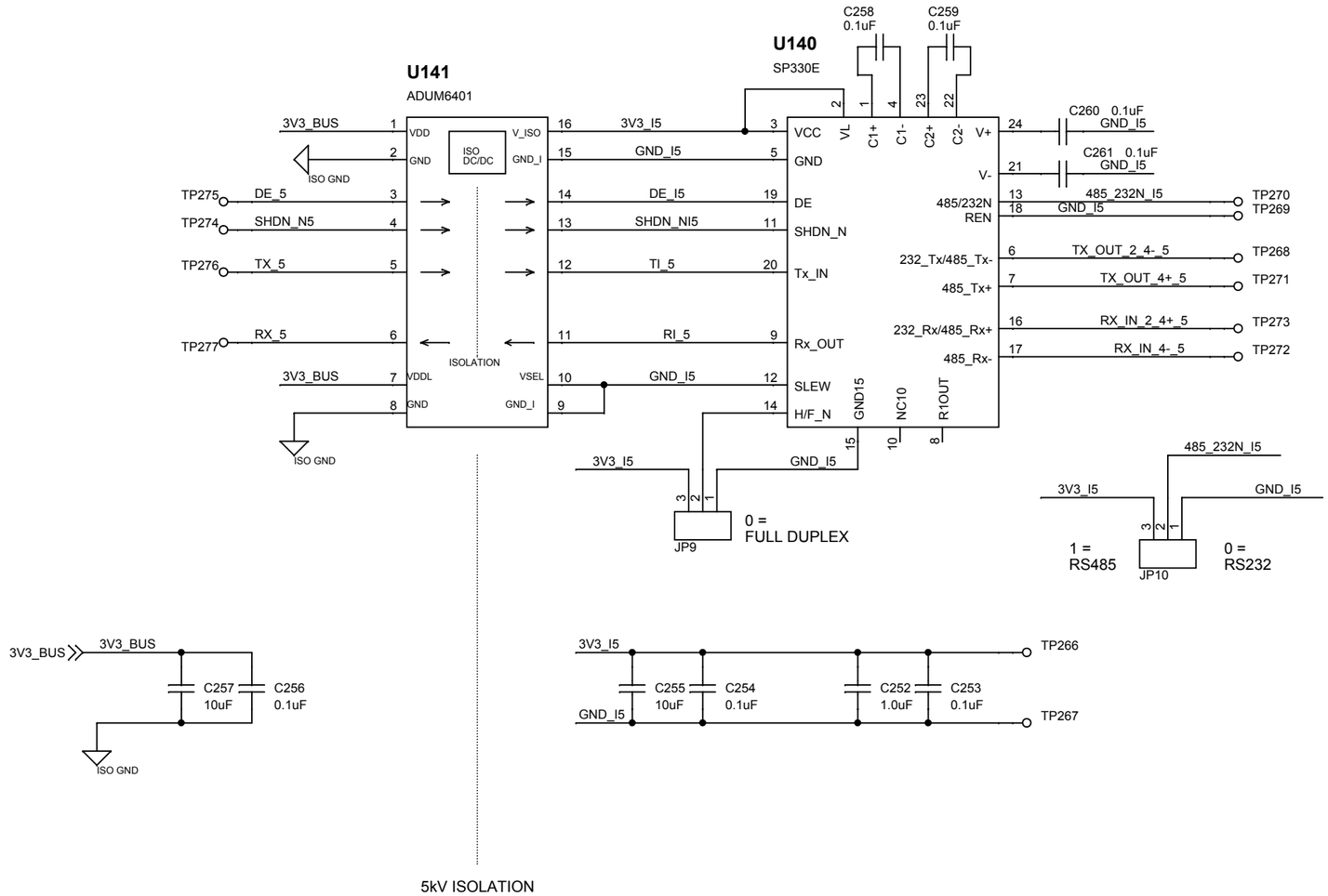

Title	SCH, AUV M'BOARD, COMMS_5
Size B	Document Number 10020068
Rev A	
Date: Thursday, May 18, 2017	Sheet 1 of 1

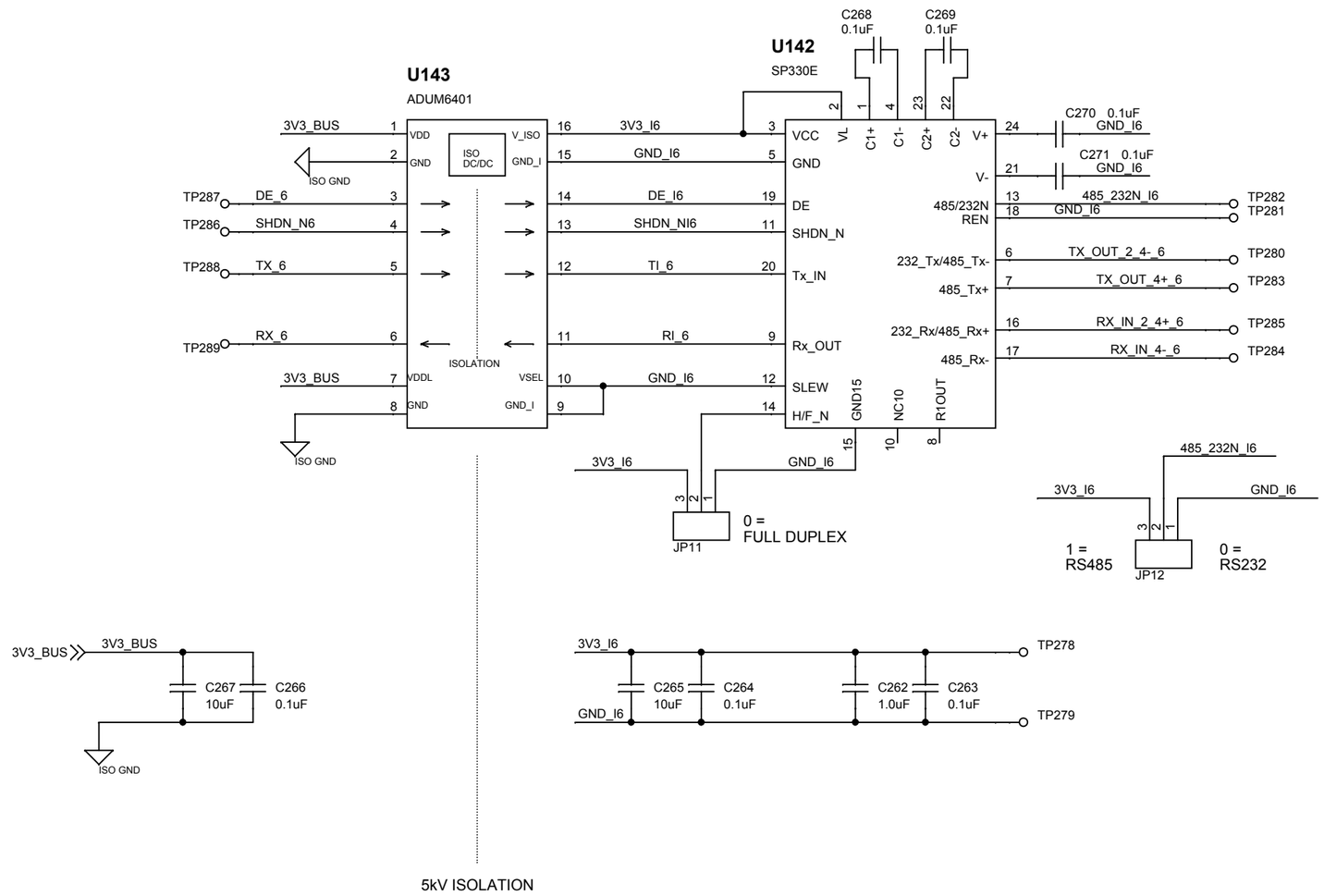

Title	SCH, AUV M'BOARD, COMMS_6	
Size B	Document Number 10020068	Rev A
Date: Thursday, May 18, 2017	Sheet 1 of 1	

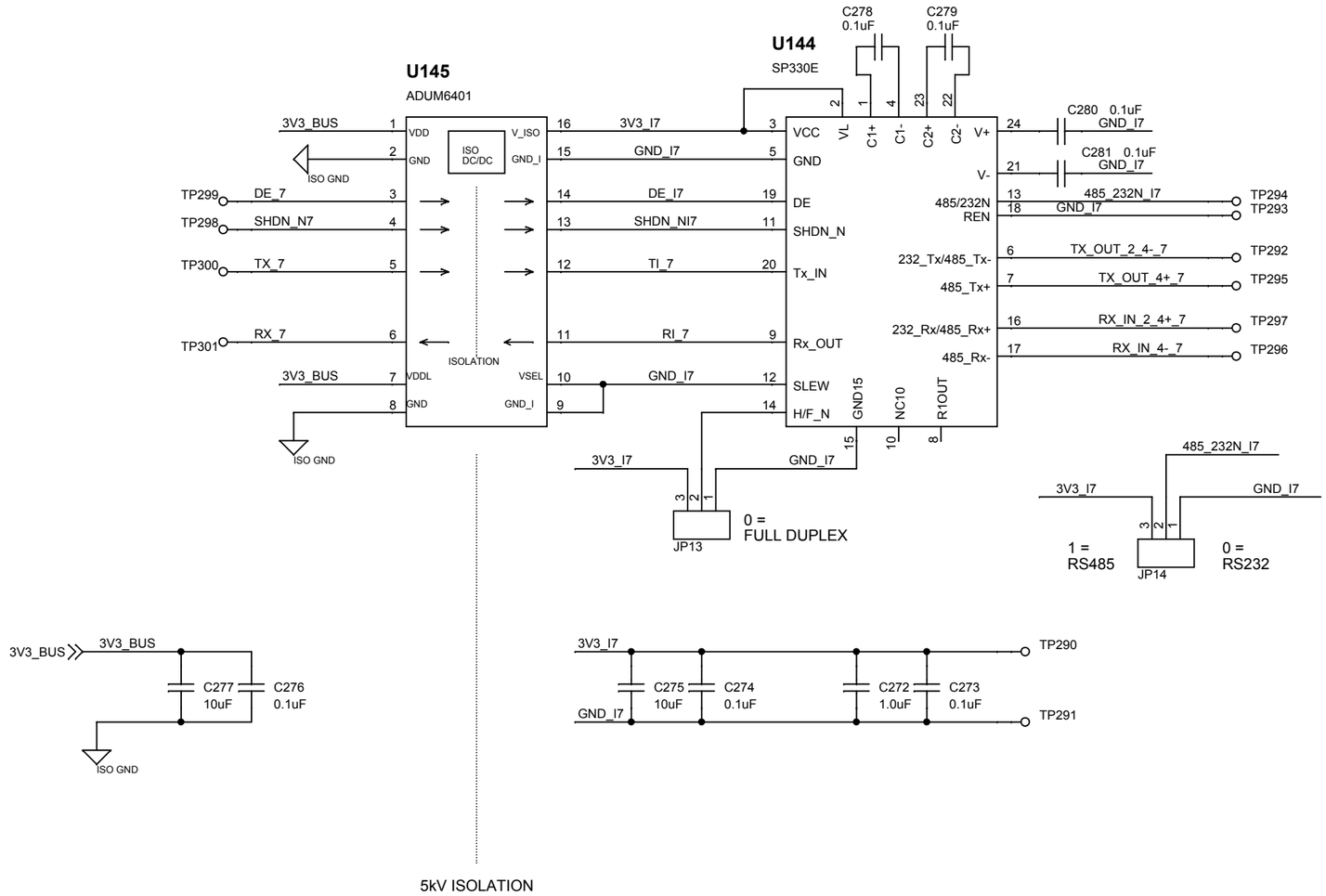

Title	SCH, AUV M'BOARD, COMMS_7	
Size B	Document Number 10020068	Rev A
Date: Thursday, May 18, 2017	Sheet 1 of 1	

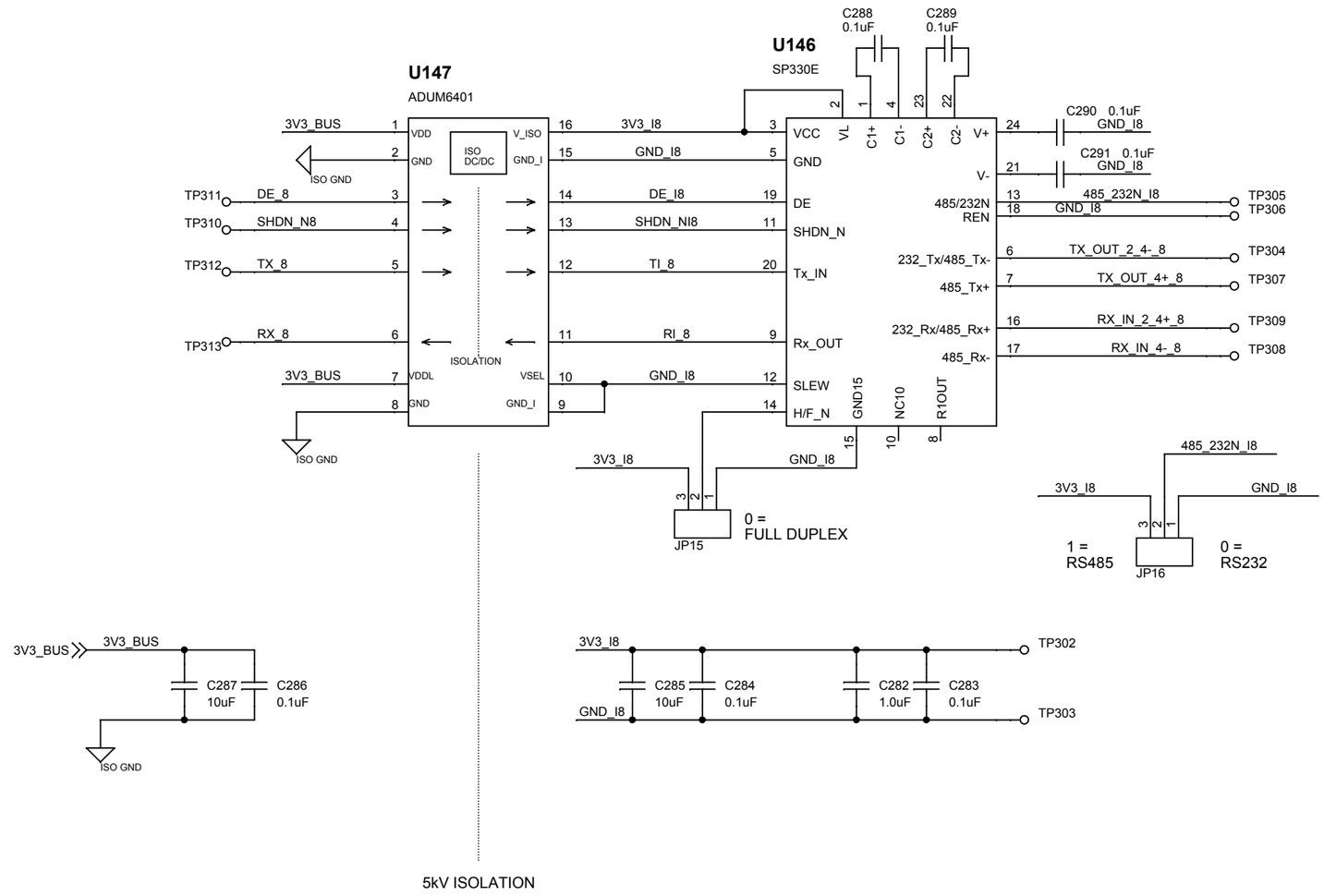

Title	SCH, AUV M'BOARD, COMMS_8	
Size B	Document Number 10020068	Rev A
Date: Thursday, May 18, 2017	Sheet 1 of 1	

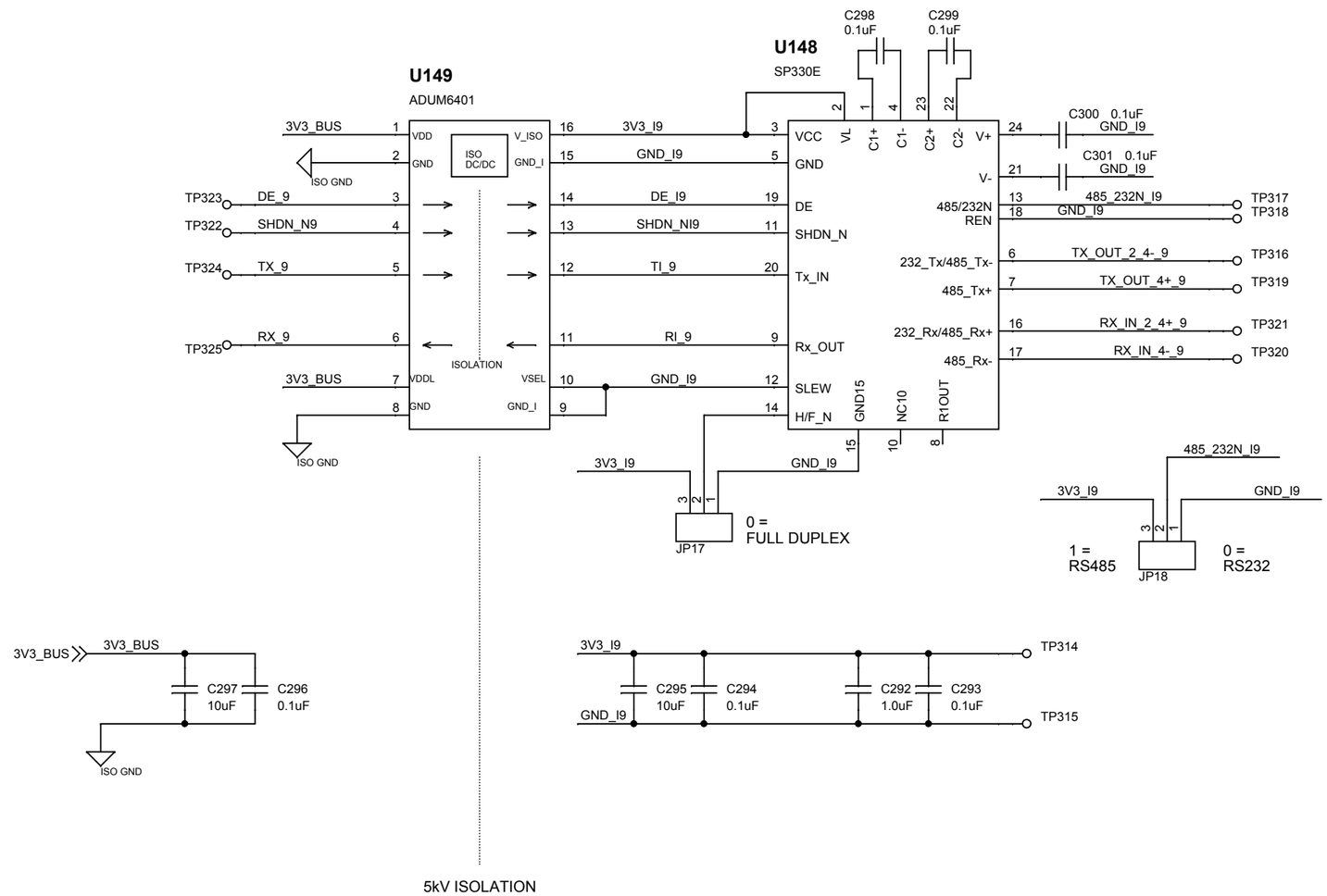

Title	SCH, AUV M'BOARD, COMMS_9	
Size B	Document Number 10020068	Rev A
Date: Thursday, May 18, 2017	Sheet 1 of 1	

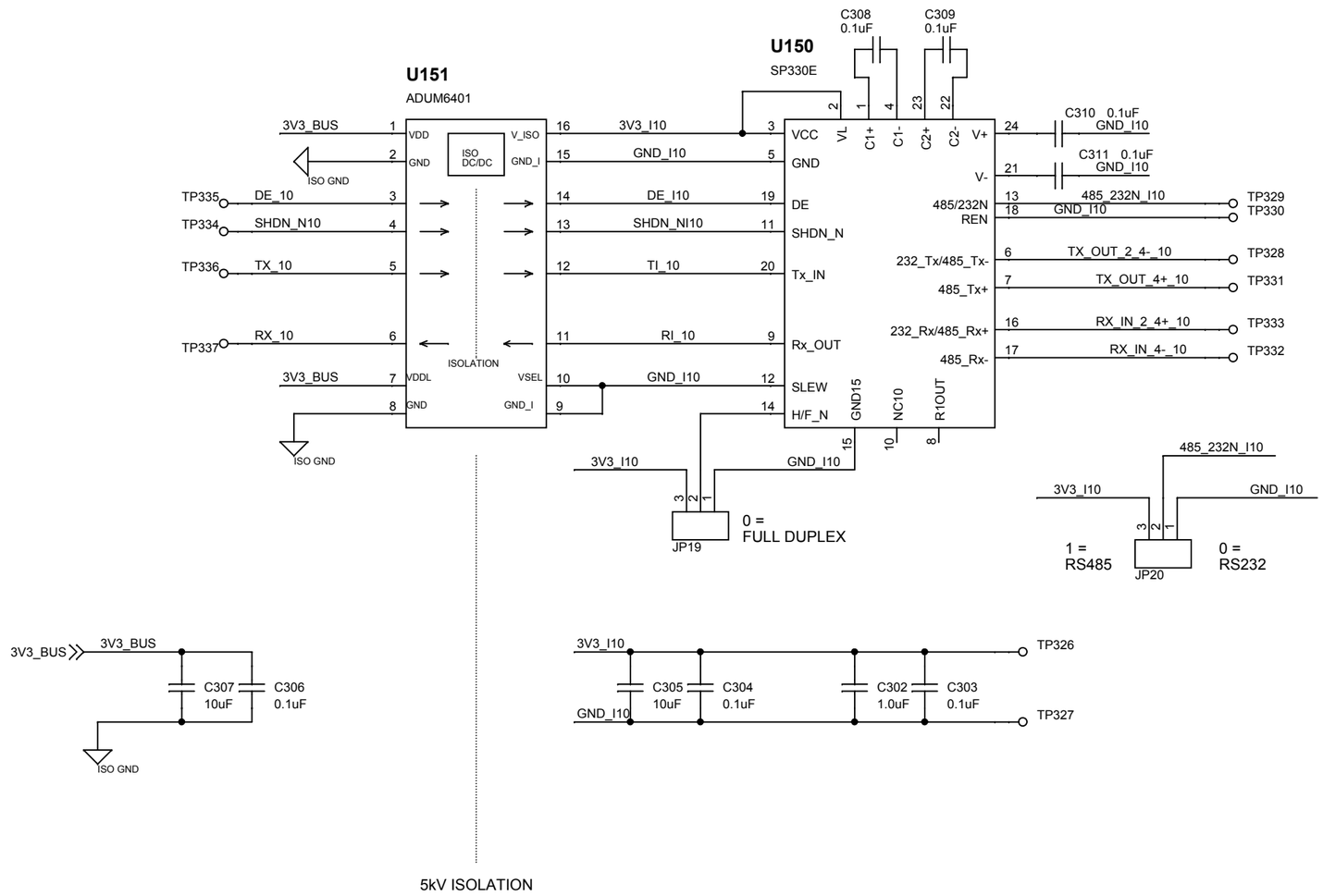

Title	SCH, AUV M'BOARD, COMMS_10
Size B	Document Number 10020068
Rev	A
Date:	Thursday, May 18, 2017
Sheet	1 of 1

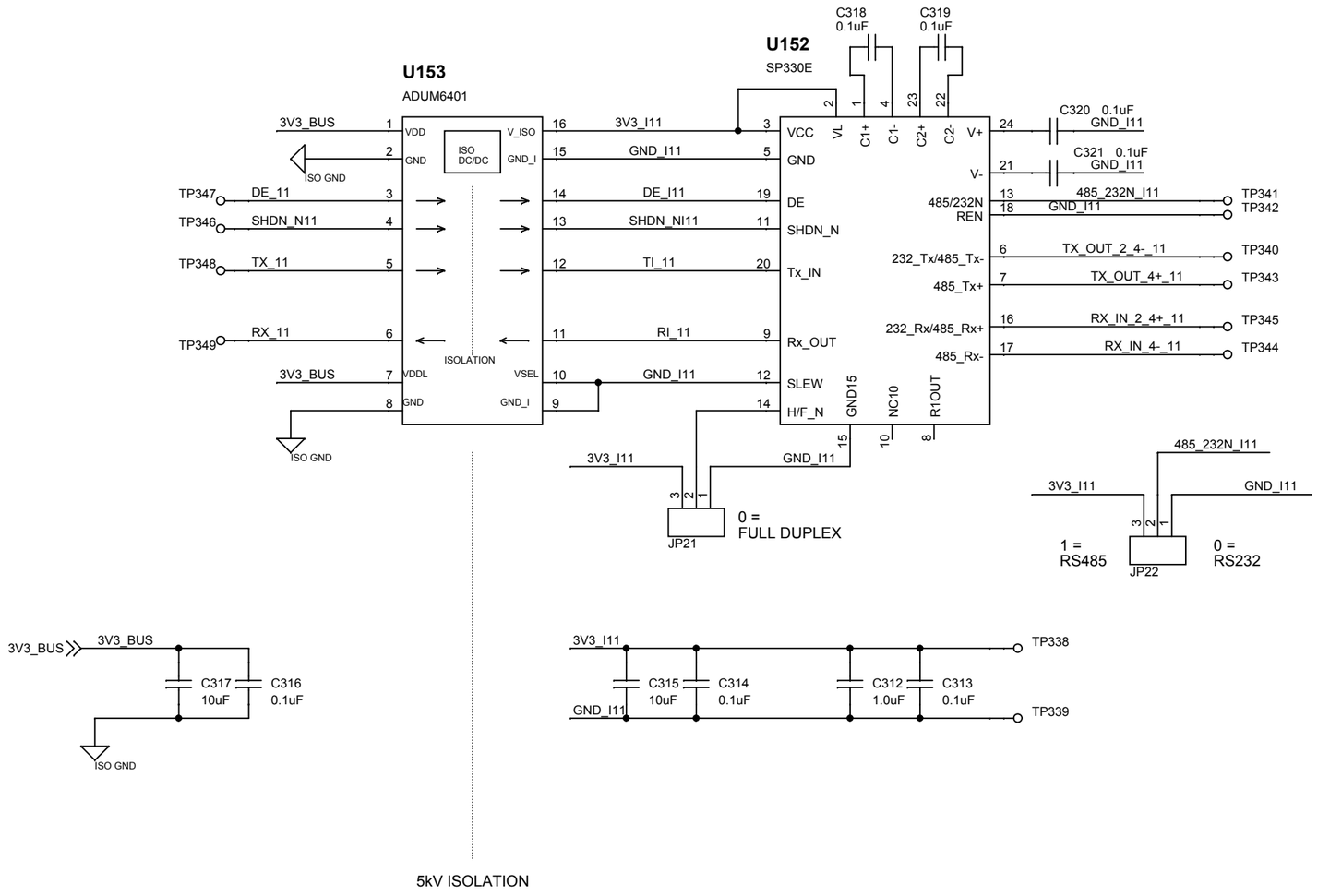

Title	SCH, AUV M'BOARD, COMMS_11	
Size B	Document Number 10020068	Rev A
Date: Thursday, May 18, 2017	Sheet 1 of 1	

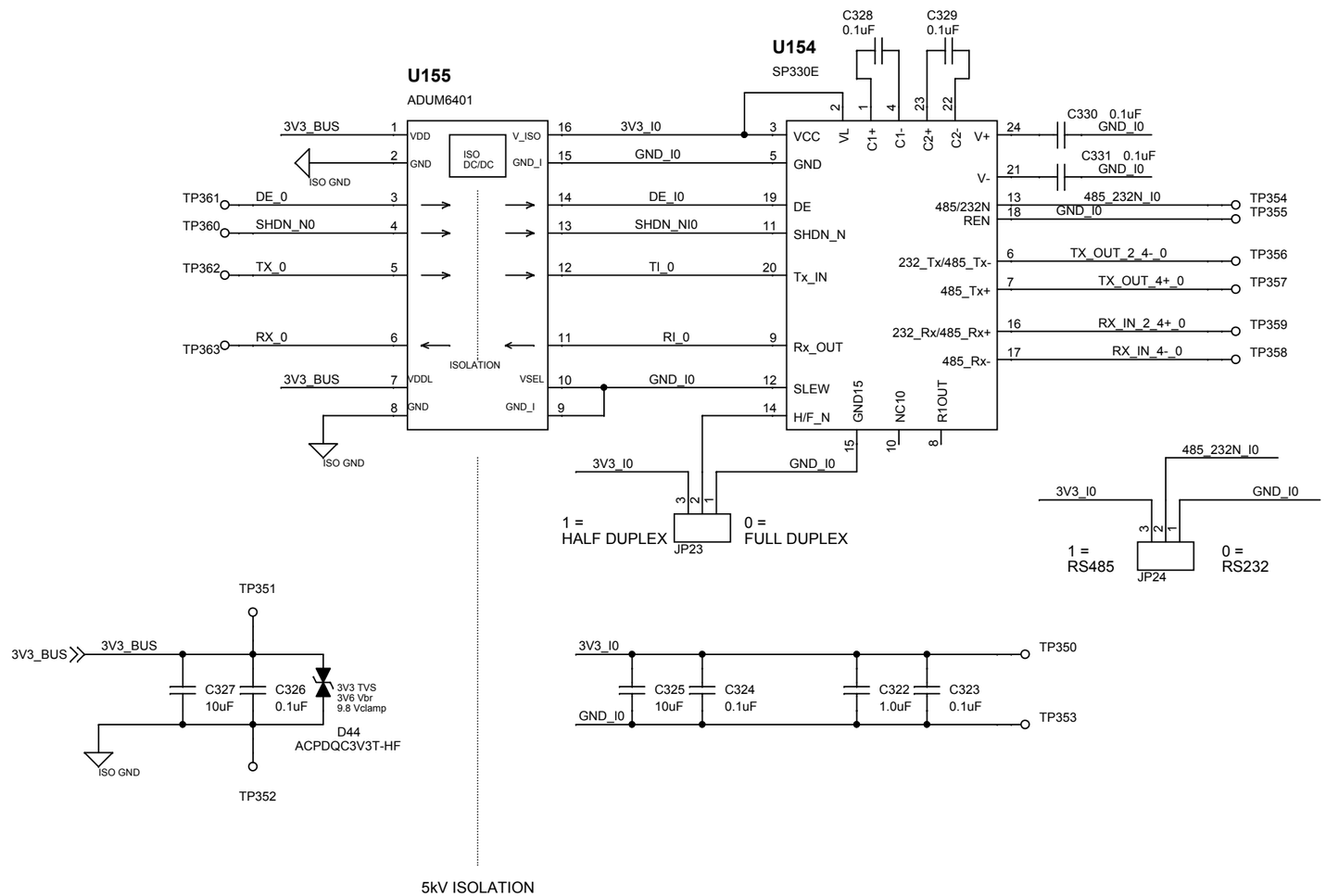

SINGLE CHANNEL
POWER: 46 mW
.014A at 3V3

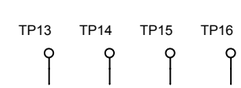

mt_hole_no_4_w_washer

Title	**SCH, AUV M'BOARD, COMMS_0**
Size **B**	Document Number **10020068** Rev **A**
Date: Thursday, May 18, 2017	Sheet 1 of 1

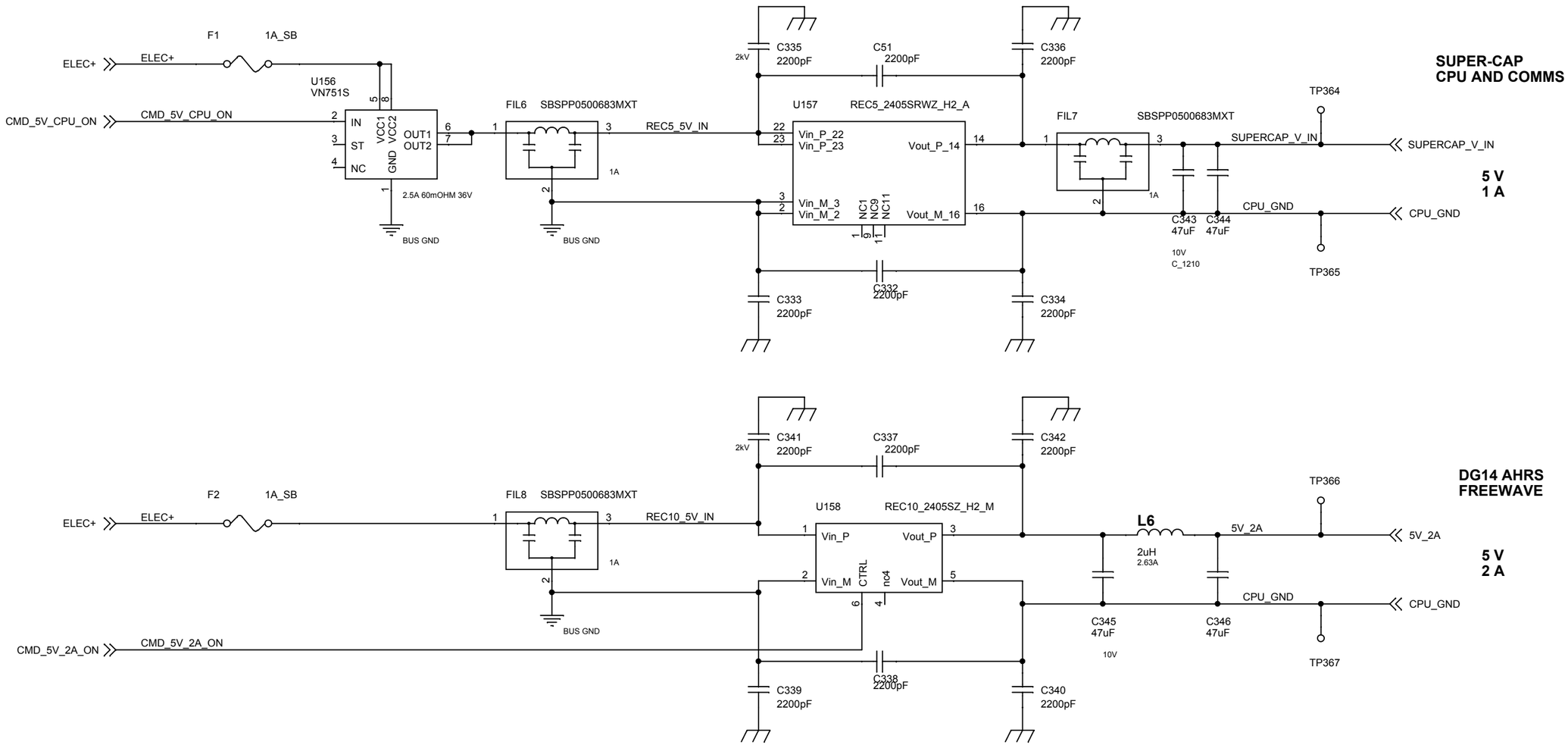

Title	SCH, AUV M'BOARD, DC_DC 5V	
Size B	Document Number 10020068	Rev A
Date: Thursday, May 18, 2017	Sheet 1 of 1	

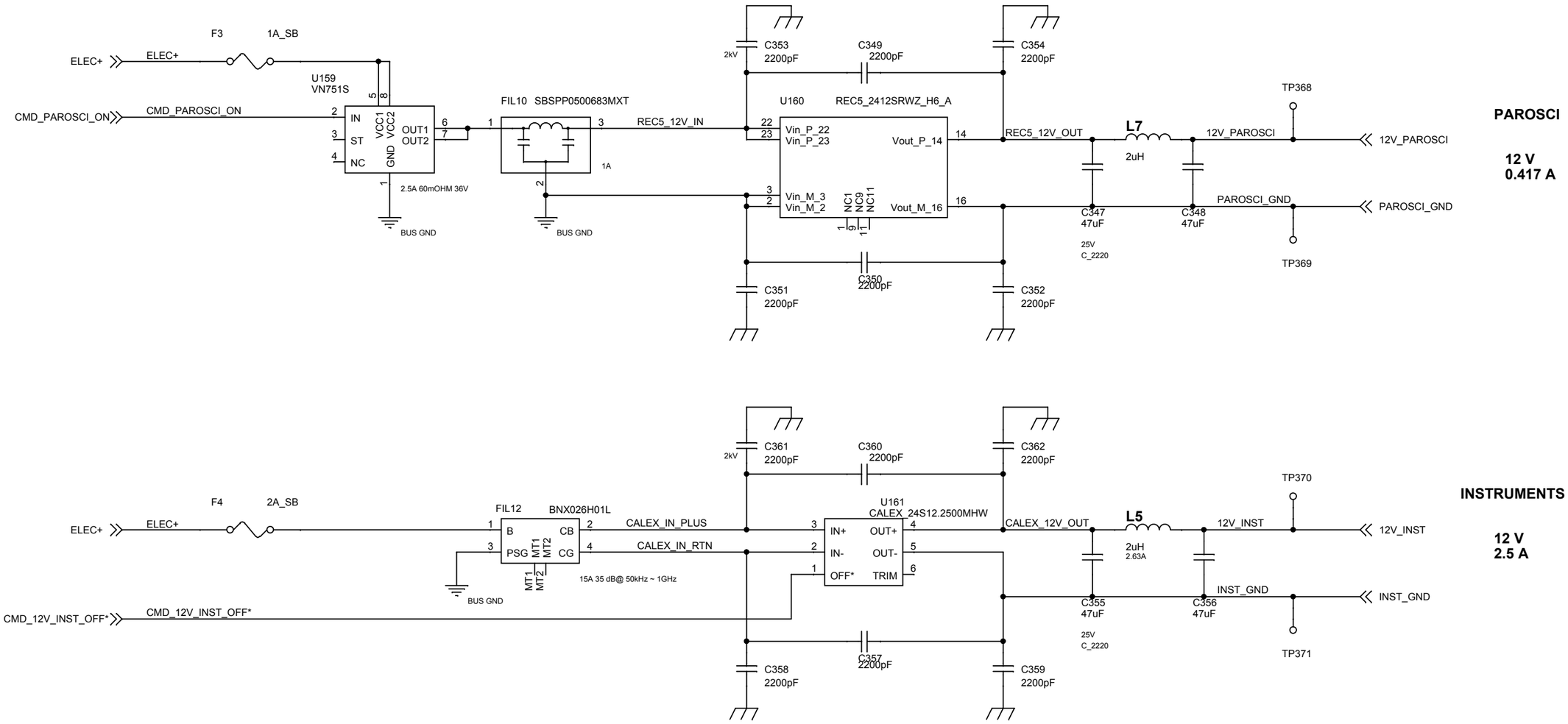

Title	SCH, AUV M'BOARD, DC_DC 12V	
Size B	Document Number 10020068	Rev A
Date: Thursday, May 18, 2017	Sheet 1 of 1	

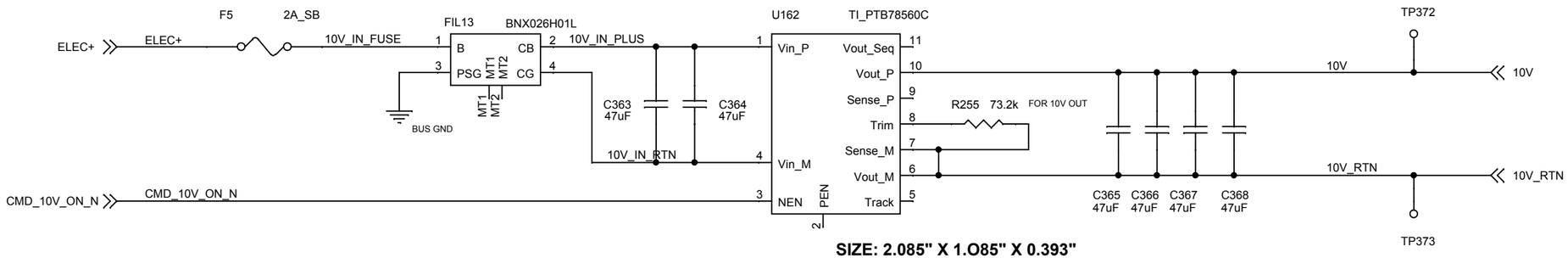

NOVATECH
SBD WARRIOR

10 V
3 A

SIZE: 2.085" X 1.O85" X 0.393"

Possibility: XP ITZ0924S09
only 1 amp output
maybe use w resistor and big cap on output ?

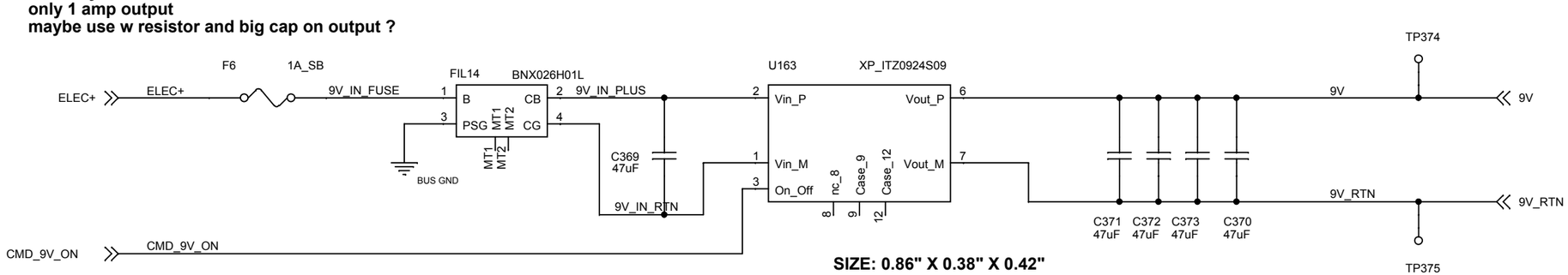

NOVATECH
SBD WARRIOR

9 V
1 A

SIZE: 0.86" X 0.38" X 0.42"

Possibility: Recom RPA30-2412SAW
output trims down to 10.8V

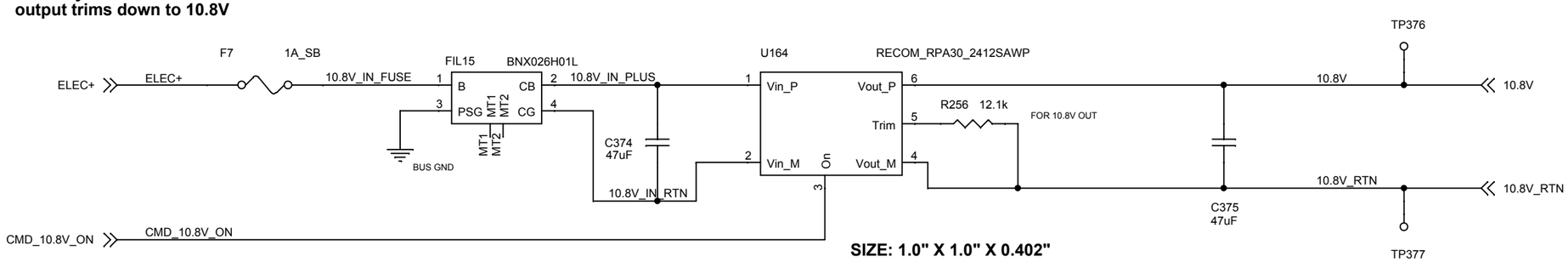

NOVATECH
SBD WARRIOR

10.8 V
2.5 A

SIZE: 1.0" X 1.0" X 0.402"

Title	**SCH, AUV M'BOARD, DC_DC 10V**	
Size **B**	Document Number **10020068**	Rev **A**
Date: Thursday, May 18, 2017	Sheet 1 of 1	

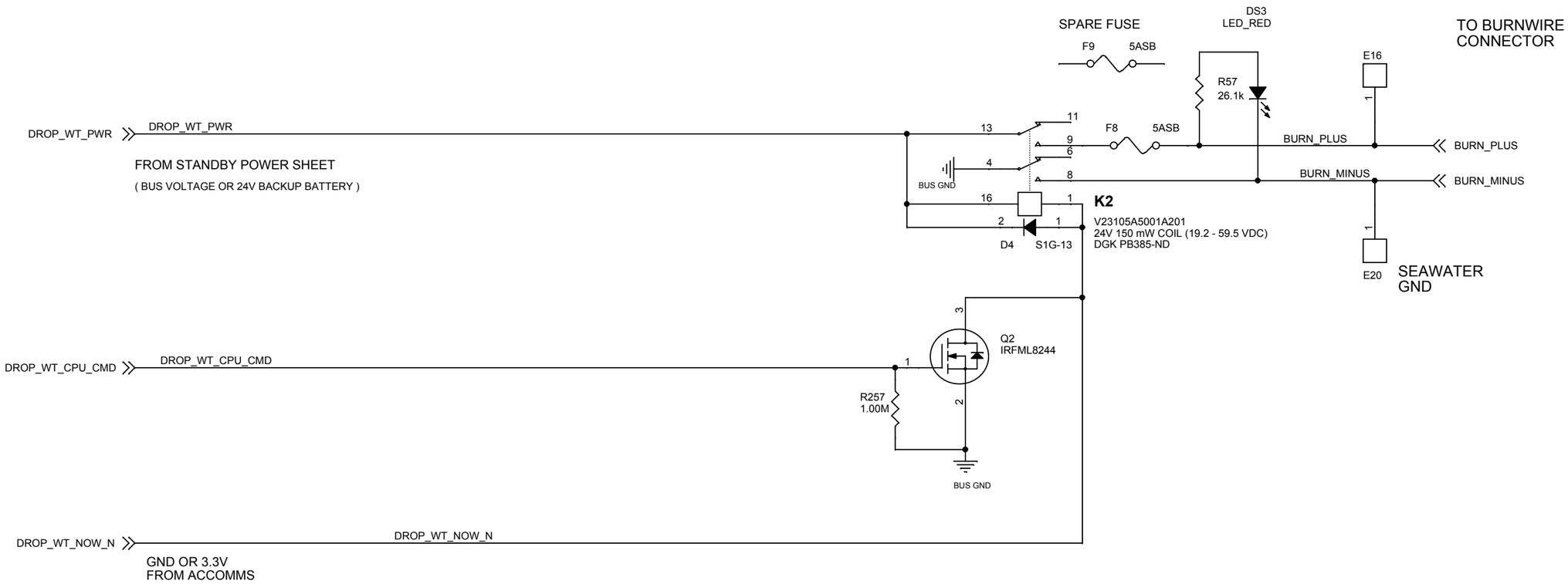

Title	SCH, AUV M'BOARD, DROP WEIGHT	
Size B	Document Number 10020068	Rev A
Date: Thursday, May 18, 2017	Sheet 1 of 1	

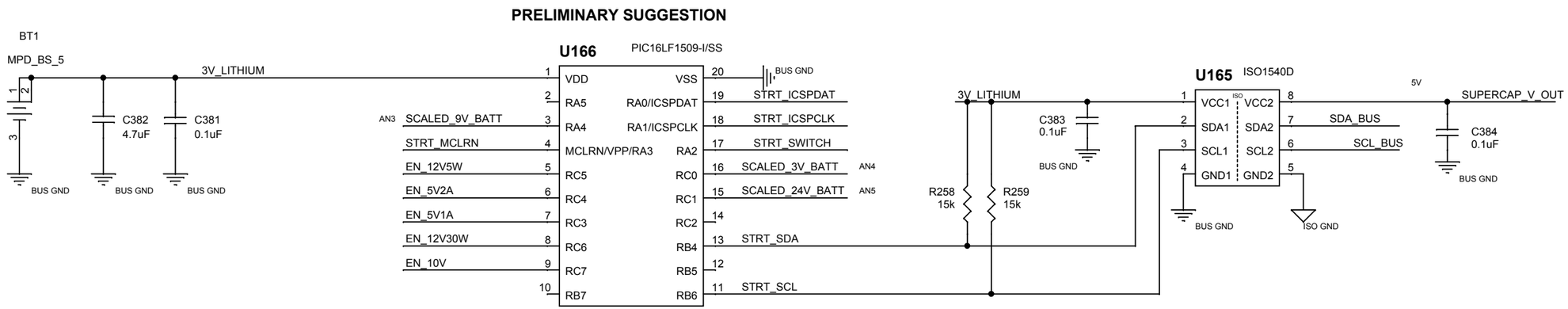

OFF-PAGE CONNECTORS

SUPERCAP_V_OUT	SUPERCAP_V_OUT 5V CPU POWER
SDA_BUS	SDA_BUS CPU COMMS
SCL_BUS	SCL_BUS CPU COMMS
STRT_ICSPDAT	STRT_ICSPDAT PROGRAMMING
STRT_ICSPCLK	STRT_ICSPCLK PROGRAMMING
STRT_MCLRN	STRT_MCLRN PROGRAMMING
STRT_SWITCH	STRT_SWITCH REED SWITCH
DW_STBY_BATT_PLUS	DW_STBY_BATT_PLUS FROM STBY PWR SHEET
9V_STBY_BATT_PLUS	9V_STBY_BATT_PLUS NOVATECH SBD WARRIOR
DW_STBY_BATT_PLUS	DW_STBY_BATT_PLUS 24V ACOMMS DROPWT
EN_5V1A	EN_5V1A CPU POWER
EN_5V2A	EN_5V2A DG14 AHRS FRWV
EN_12V5W	EN_12V5W PAROSCI
EN_12V30W	EN_12V30W INSTRUMENTS
EN_10V	EN_10V NOVATECH SBD WARRIOR

Title
SCH, AUV M'BOARD, uCHIP XLP

Size	Document Number	Rev
B	10020068	A

Date: Thursday, May 18, 2017 Sheet 1 of 1

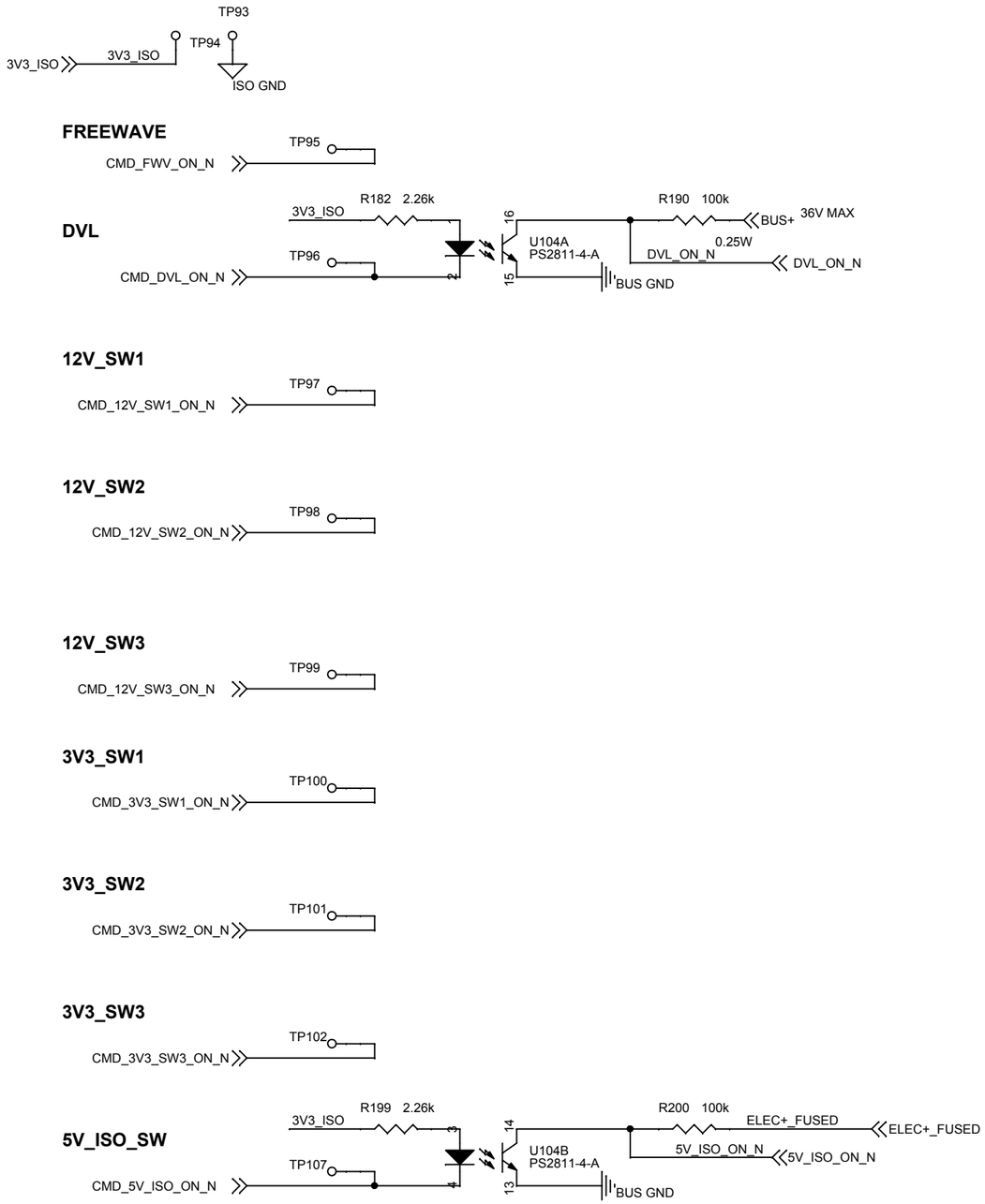

FUTURE USE

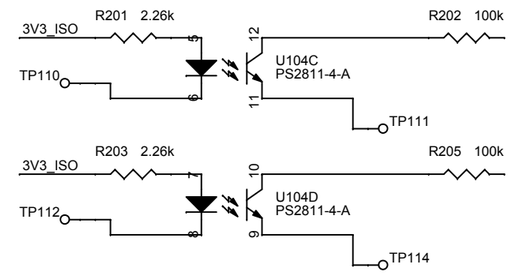

OPTO-ISOLATOR SPECS:

DIODE	TRANSISTOR
Vf = 1.15V	VceSAT = 0.3V
3.3V - 1.15V = 2.15V	36V - 0.3V = 35.7V
2.15V / 2.26k =~ 1mA	35.7V / 100k = 357uA

Title: SCH, AUV MOTHERBOARD, CPU DIG I/O		
Size: B	Document Number: 10020068	Rev: A
Date: Thursday, May 18, 2017	Sheet 3 of 10	

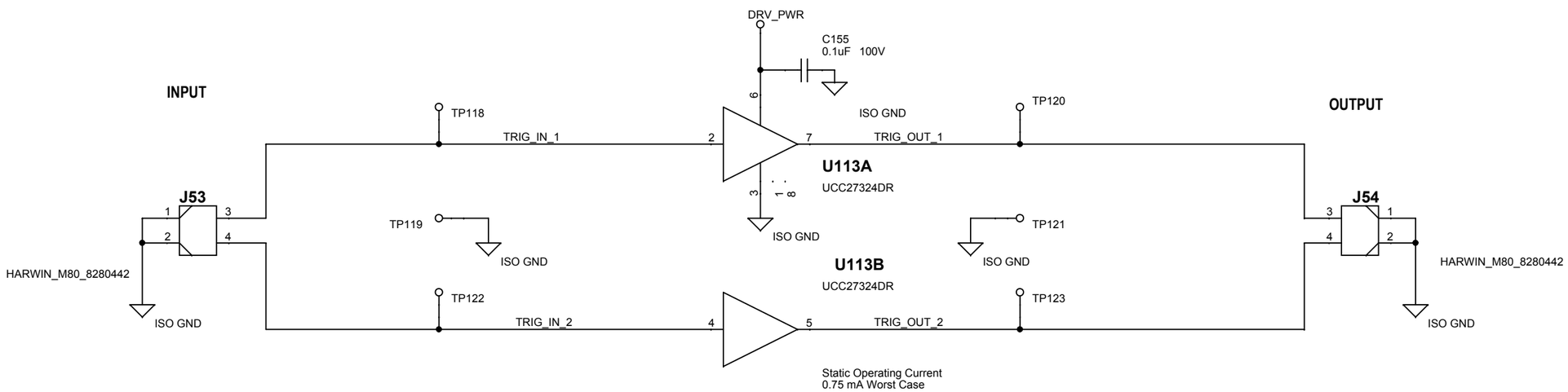

Title
SCH, AUV MOTHERBOARD, LINE DRIVER

Size	Document Number	Rev
B	10020068	A

Date: Thursday, May 18, 2017 Sheet 6 of 10

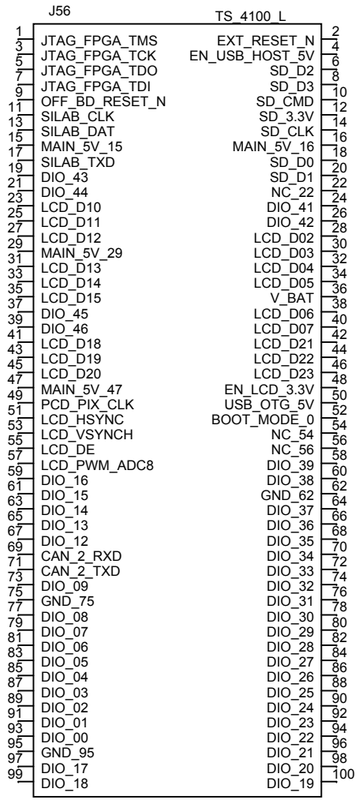

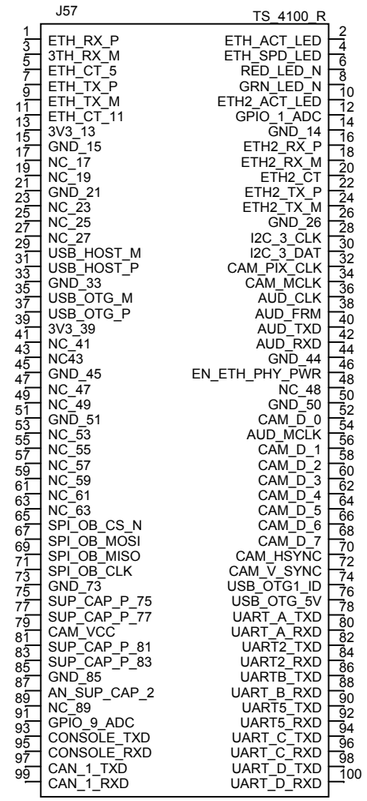

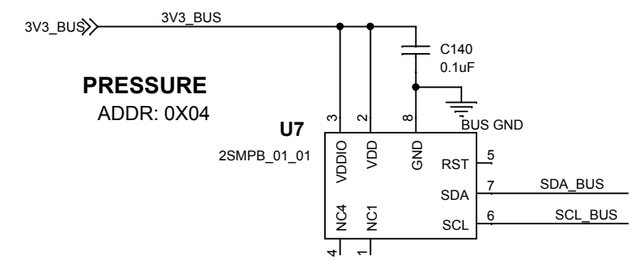

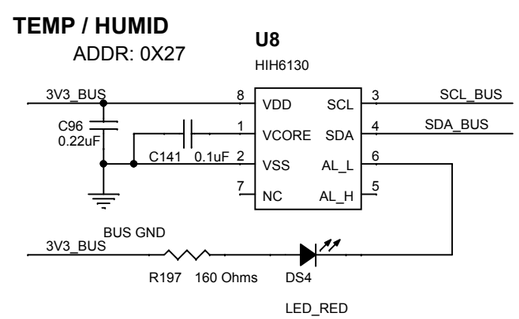

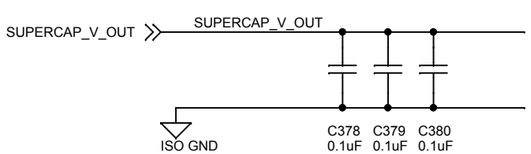

LOCATE CLOSE TO CPU PINS

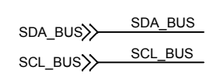

Title	SCH, AUV MOTHERBOARD, TS_4100, ENV SENS	
Size B	Document Number 10020068	Rev A
Date: Thursday, May 18, 2017	Sheet 7 of 10	

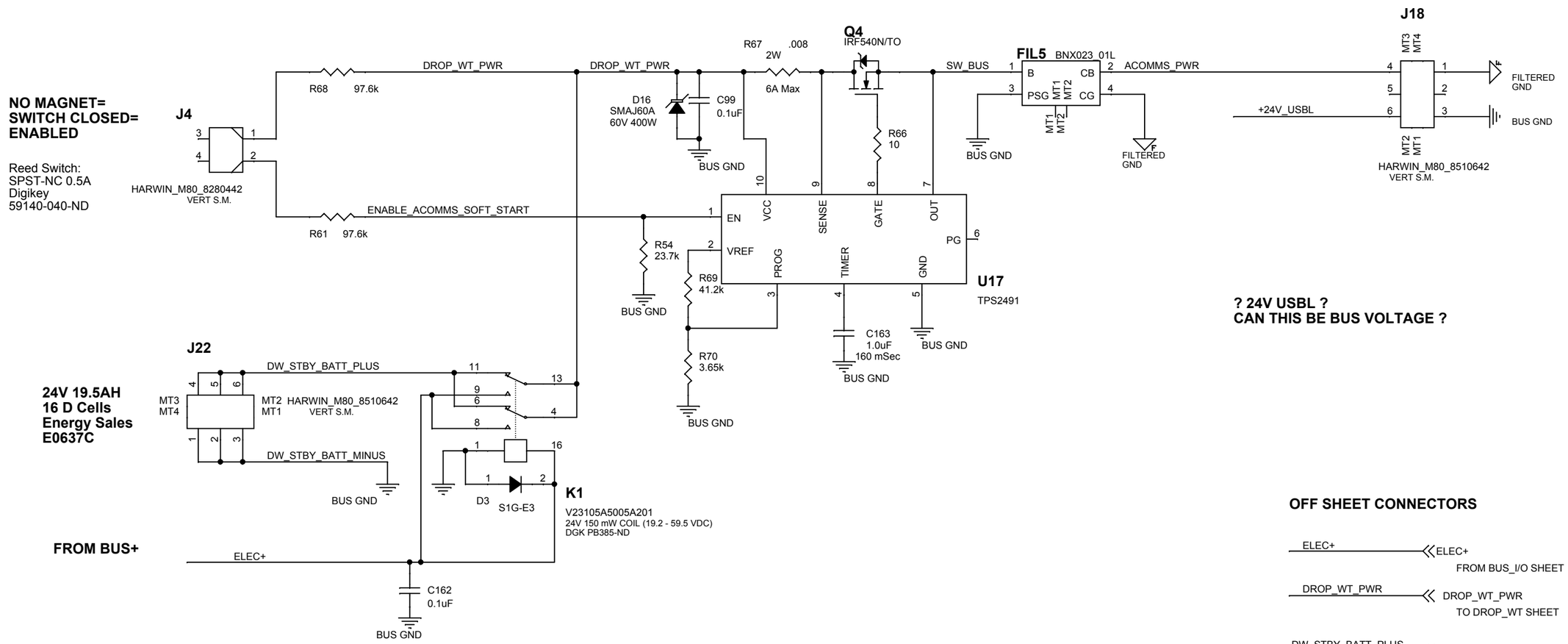

Title	SCH, AUV MOTHERBOARD, STBY PWR, ACOMMS	
Size B	Document Number 10020068	Rev A
Date: Thursday, May 18, 2017	Sheet 9 of 10	

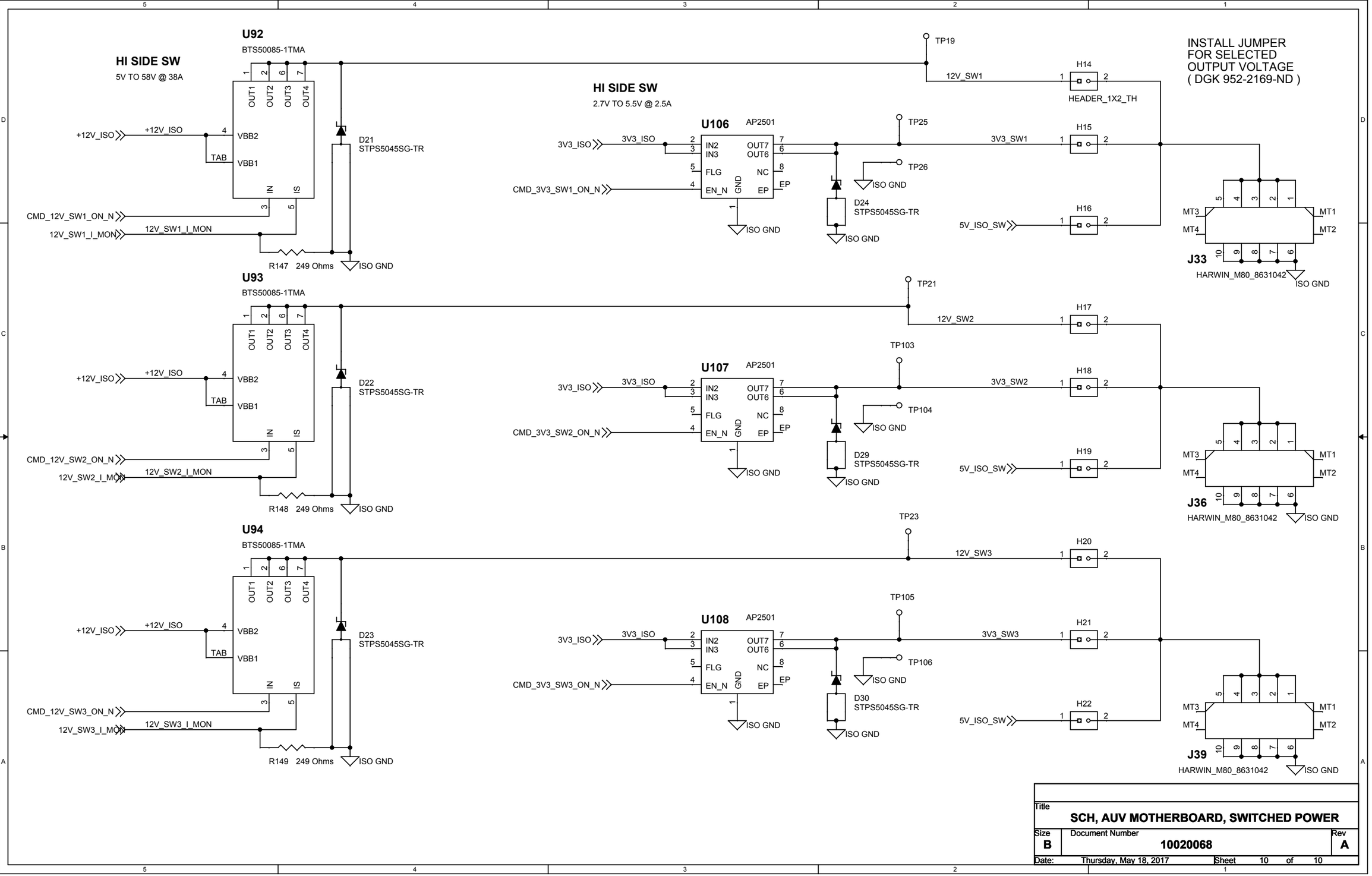

Title	SCH, AUV MOTHERBOARD, SWITCHED POWER	
Size B	Document Number 10020068	Rev A
Date: Thursday, May 18, 2017	Sheet 10 of 10	