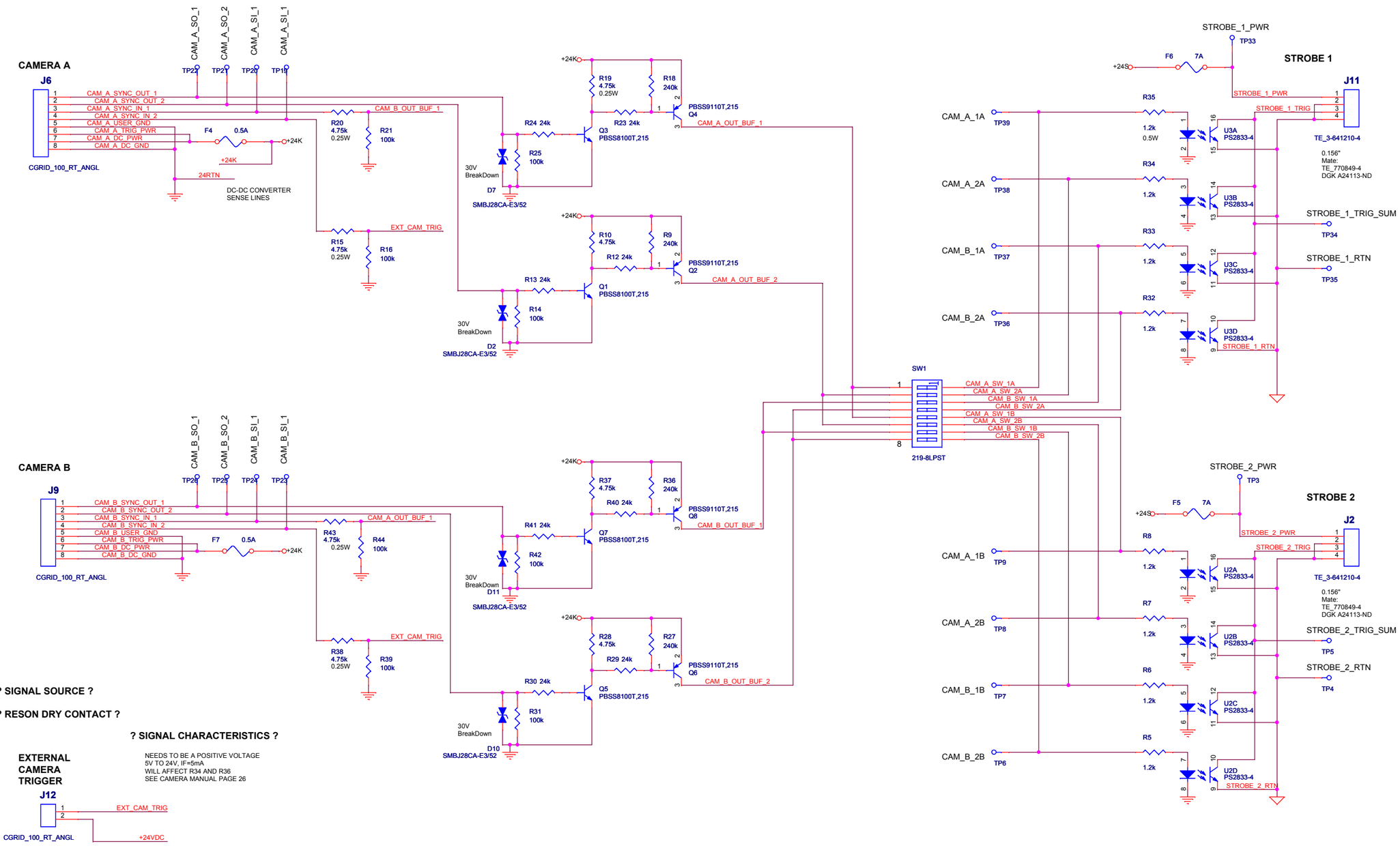

? SIGNAL SOURCE ?

? RESON DRY CONTACT ?

? SIGNAL CHARACTERISTICS ?

NEEDS TO BE A POSITIVE VOLTAGE
5V TO 24V, IF=5mA
WILL AFFECT R34 AND R36
SEE CAMERA MANUAL PAGE 26

EXTERNAL CAMERA TRIGGER

OFF-PAGE CONNECTIONS FROM POWER SHEET

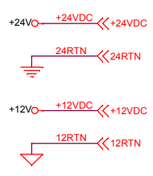

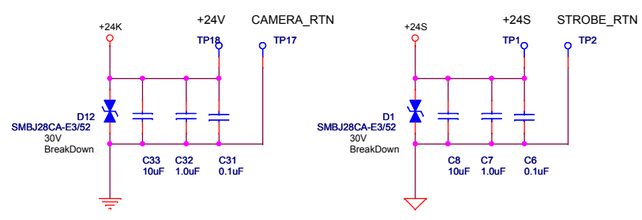

#6 MOUNTING HOLES FOR PS AND TRIGS MAIN BOARD

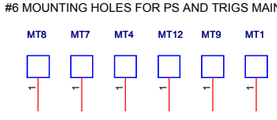

#6 MOUNTING HOLES FOR HOLD UP CAP MEZZANINE BOARD

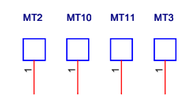

NOTES:

1. 0.156" CONNECTORS
   J1, J2, J3, J4, J5, J15
   INSTALLATION:
   CONNECT PLUG AS A SPACER
   BEFORE SOLDERING
2. VICOR COMPONENTS AND
   CONNECTORS MOUNT ON
   SOLDER SIDE

DANGER

HOLD UP
CAPACITORS
DISCHARGE TIME

5 MINUTES

Title: Sch, Triggers, Ocean Imaging		
Size: C	Document Number: 10020719	Rev: C
Date: Monday, June 04, 2012	Sheet 1 of 1	