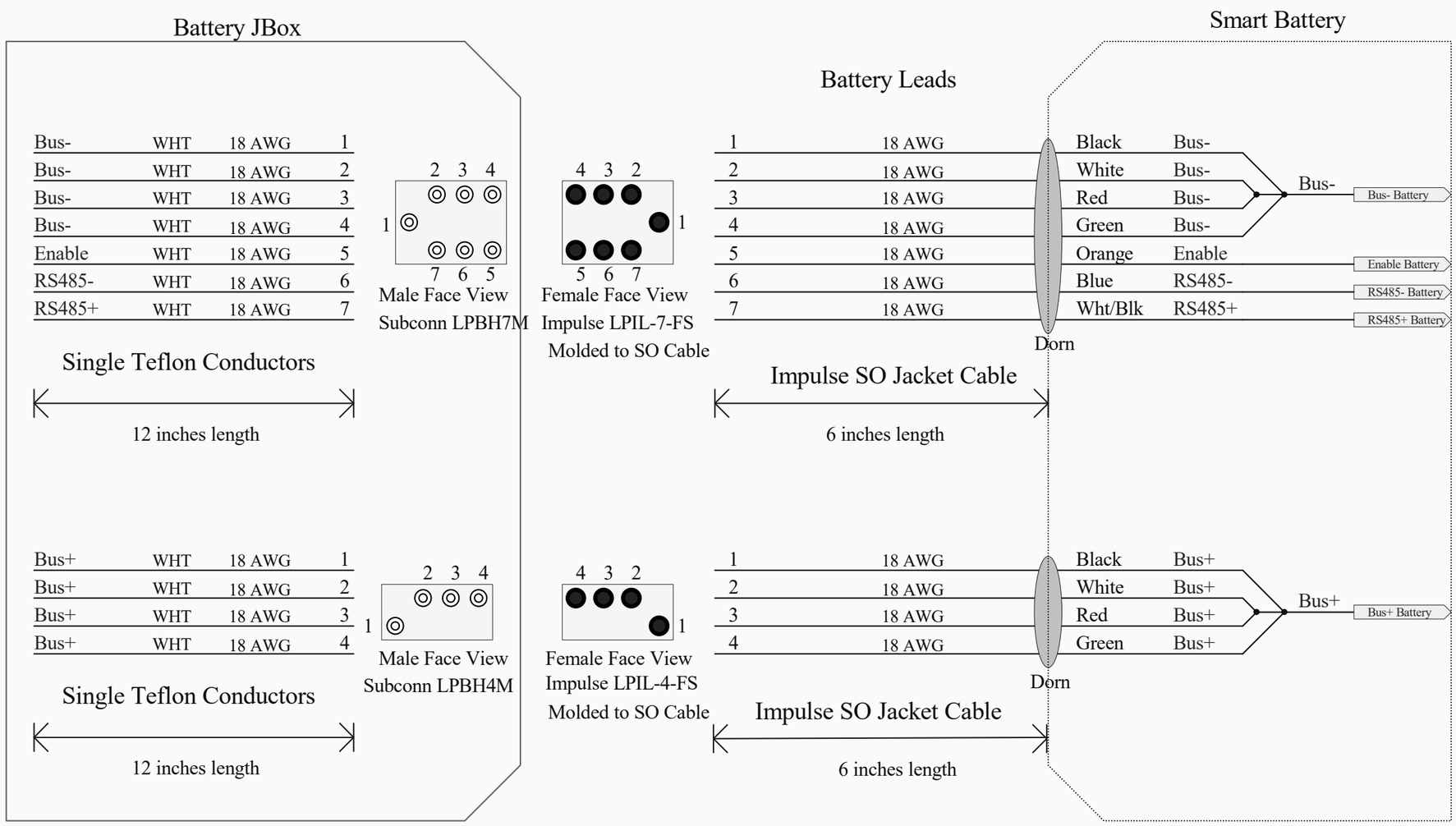

1 KW-hr Battery = 35 A-hr
-10 A max charge rate
-17 A max discharge rate

2 KW-hr Battery = 70 A-hr
-20 A max charge rate
-30 A max discharge rate

Cannot open file
C:\sib\MBARI\logo_bg2.bmp

Title:	Battery JBox Wiring to Battery	
Engineer:	7700 Sandholdt Rd	
Checked:	Moss Landing, CA 95039-9644	
Part No.:	AUV00002	Rev: 1
Sheet:	2 of 13	Date: 3/20/2024

\\atlas.shore.mbari.org\ProjectLibrary\368000_DMO_AUV\Schematics\Protel_DXP_Schs_CTD-Vehicle