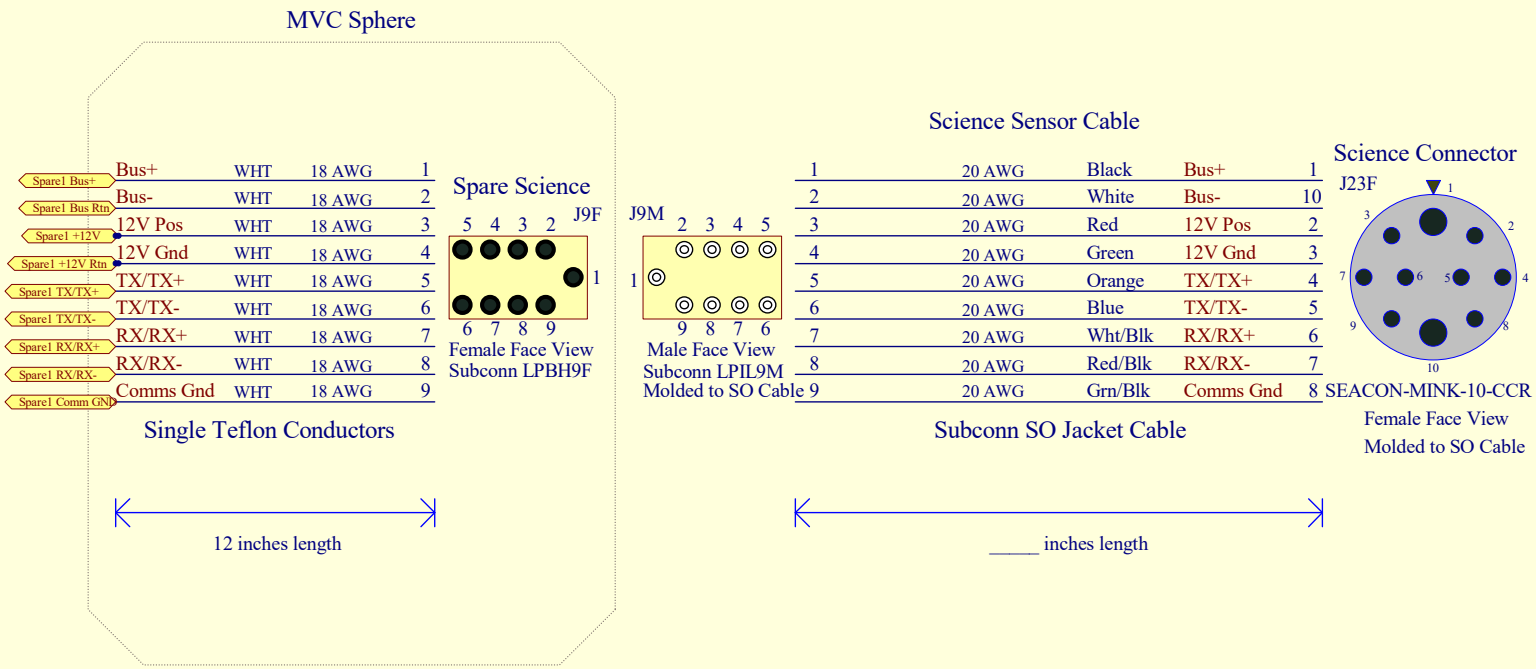

Cannot open file
C:\sib\MBARI\logo_bg2.bmp

Title:	MVC Wiring to Spare Science
Engineer:	7700 Sandholdt Rd
Checked:	Moss Landing, CA 95039-9644
Part No.:	AUV00011 — Rev: 1
Sheet:	11 of 13 — Date: 3/20/2024

\\atlas.shore.mbari.org\ProjectLibrary\368000_DMO_AUV\Schematics\Protel_DXP_Schs_CTD-Vehic