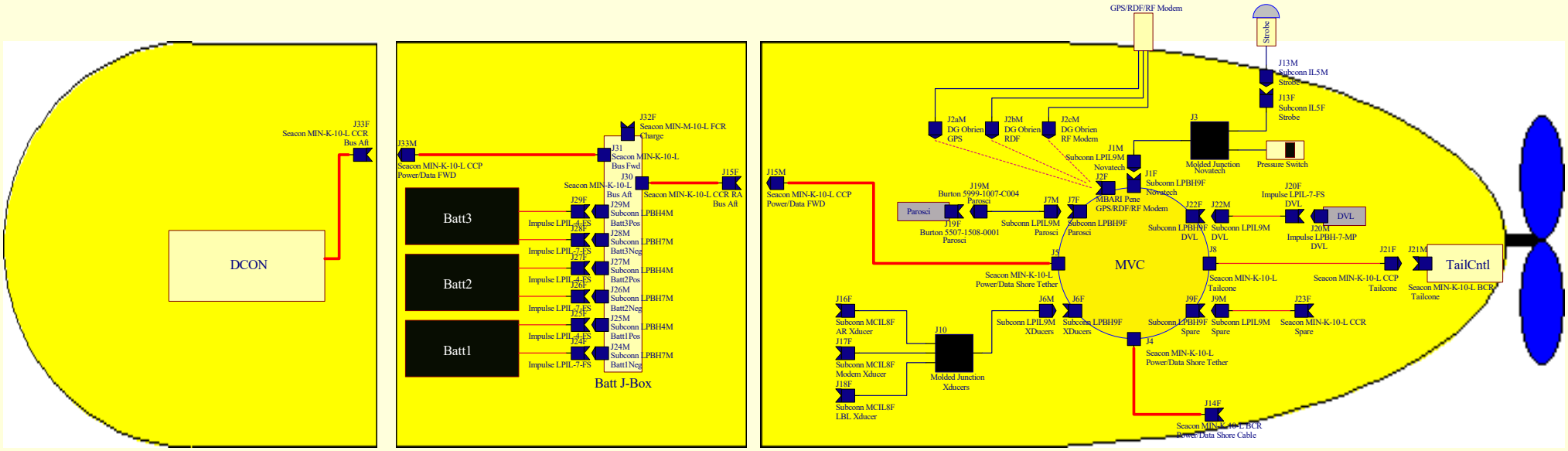

NOTES:

Raw Power/Data Bus Cable:
Raw Power on Cable:

Penetrator:

Plug:

Receptacle:

Cannot open file
C:\sib\MBARI\logo_bg2.bmp

Title:	CTD AUV System Block Diagram		
Engineer:	Mark Sibenac		
Checked:	*		
Part No.:	AUV00014	Rev: 1	
Sheet:	1 of 1	Date: 3/20/2024	

\\atlas.shore.mbari.org\ProjectLibrary\368000_DMO_AUV\Schematics\Protel_DXP_Schs_CTD\Vehicle-V