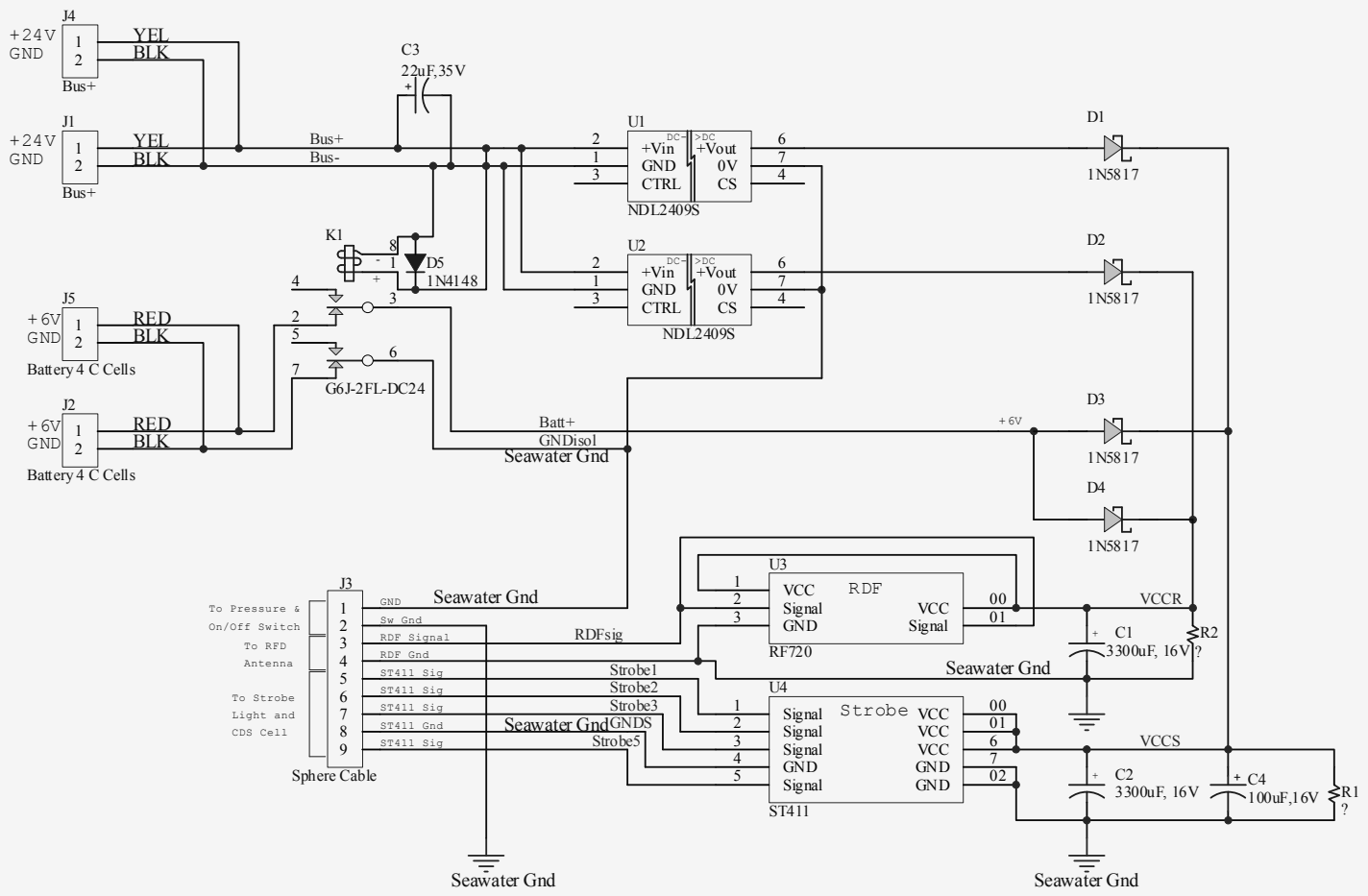

Rev 1.0 - point-to-point solder board built on 2001-APR-06
Rev 2.0 - PCB designed for 2002
Rev 3.0 - PCB designed for Dorado

Title: Novatech Carrier Board		Cannot open file C:\sib\MBARI\logo_bg2.bmp
Engineer: Mark Sibenac		
Checked:		
Part No.: Novatech-003	Rev: 3.0	
Sheet: 1 of 1	Date: 7/9/2010	
X:\368000_DMO_AUV\Schematics\NovatechCarrierBoard\Novatech Carrier Board.sch		