REVISIONS				
REV.	ZONE	DESCRIPTION	DATE	APPVD.
A	-	ENGINEERING RELEASE	04MAR2016	AW

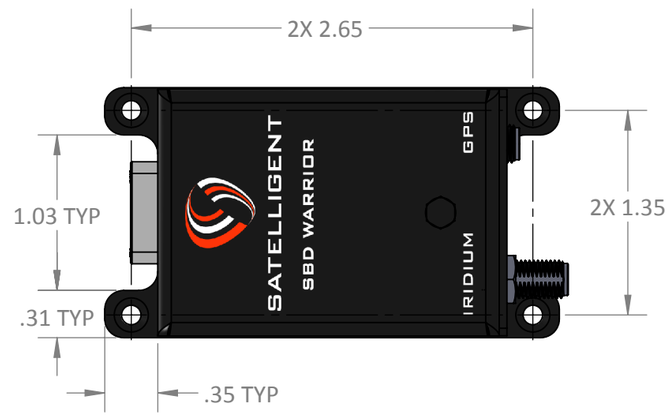

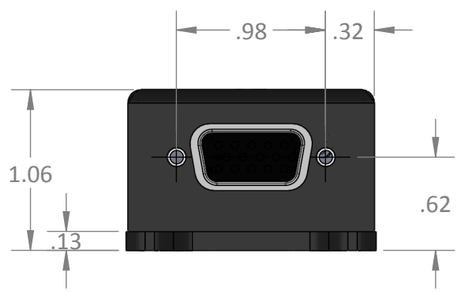

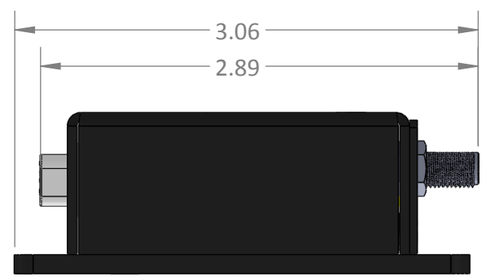

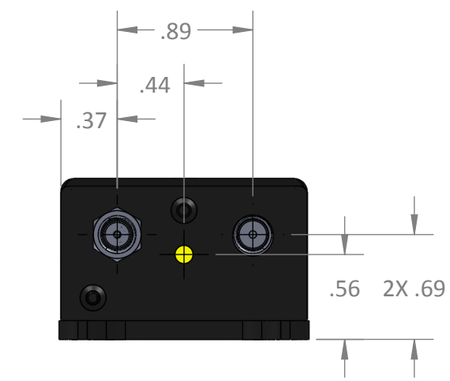

THIS DOCUMENT CONTAINS INFORMATION PROPRIETARY TO ANDIS THE PROPERTY OF SATELLIGENT OR IS UNDER A CONFIDENTIALITY AGREEMENT BETWEEN SATELLIGENT AND THIRD PARTIES. THE RECIPIENT OF THIS DOCUMENT, BY RETENTION AND USE, AGREES TO HOLD THIS DOCUMENT AND ITS CONTENT, IN CONFIDENCE. THIS DOCUMENT SHALL NOT BE REPRODUCED OR REPLICATED IN WHOLE OR IN PART, BY ANY MEANS. NOR SHALL IT BE TRANSFERED OR COMMUNICATED TO ANY THIRD PARTY WITHOUT THE WRITTEN CONSENT OF SATELLIGENT UPON REQUEST. THIS PROPRIETARY INFORMATION NOTICE IS AN INTEGRAL PART OF THIS DOCUMENT AND SHALL NOT BE REMOVED OR ALTERED.

THIRD ANGLE PROJECTION

UNLESS OTHERWISE SPECIFIED:

LINEAR DIMENSIONS UP TO 18:
2 PLACES ±.020
3 PLACES ±.010

LINEAR DIMENSIONS OVER 18:
2 PLACES ±.030
3 PLACES ±.020

HOLES UP TO Ø.500 ±.005
HOLES OVER Ø.500 LINEAR DIM. APPLY

ANGULAR DIMENSIONS ±0.5°

MACHINE FINISH 125

	NAME	DATE
DRAWN	A.SAULNIER	02MAR2016
CHECKED		
ENG APPR.		
MFG APPR.		
Q.A.		

SATELLIGENT

FINISH: N/A

MATERIAL: N/A

SATELLIGENT

TITLE:

SBD WARRIOR
GENERAL ARRANGEMENT

SIZE	DWG. NO.	REV
B	ENC-1013	A

SCALE: 1:1 | WEIGHT: 0.06LBS | SHEET 1 OF 1