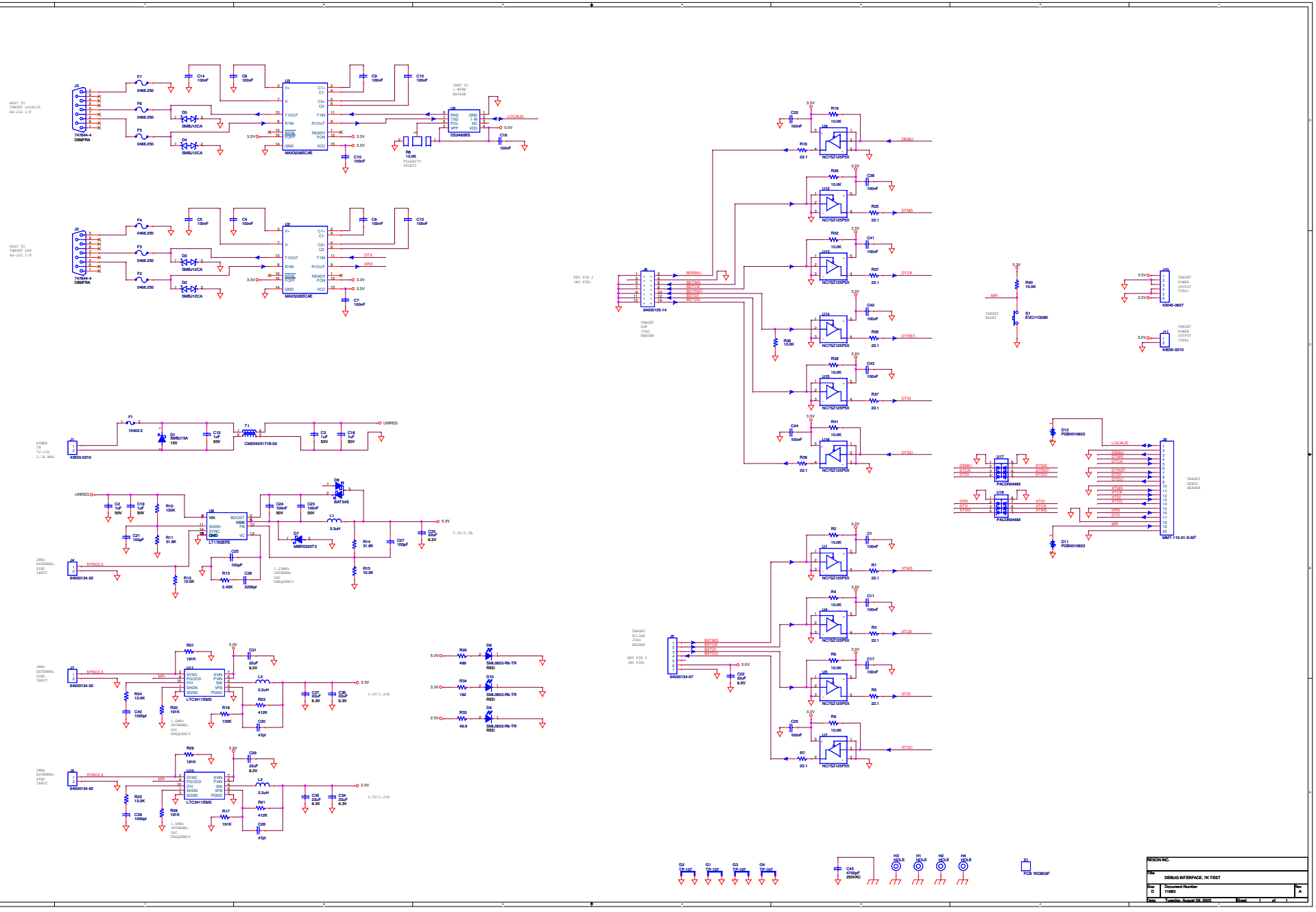
HOST TO TARGET LOCALID RS-232 I/F
HOST TO TARGET DSP RS-232 I/F
MAX3226ECAE
DS2480B5
LOCALID
DTX
DRX
UNREG
POWER IN 7V-15V 2.1A MAX
43650-0210
CM5345X171B-00
LT1765EFE
BAT54S
MBRS320T3
2MHz EXTERNAL SYNC INPUT
64000134-02
LTC3411EMS
1.4MHz INTERNAL OSC FREQUENCY
1.25MHz INTERNAL OSC FREQUENCY
3.3V/1.25A
2.5V/1.25A
SMLD603-R6-TR RED
KEY PIN 3 (NO PIN)
64000135-14
TARGET DSP JTAG HEADER
DEMU
DTMS
DTCK
DTRST
DTDI
DTDO
NC7SZ125P5X
PZC2N04M
PZC2N04M
KEY PIN 5 (NO PIN)
64000134-07
TARGET XILINX JTAG HEADER
XTMS
XTCK
XTDI
XTDO
EVQ11G03K
TARGET RESET
43045-0607
TARGET POWER OUTPUT TYPE1
43650-0210
TARGET POWER OUTPUT TYPE2
PCB00010603
MSET-110-01-S-MT
TARGET DEBUG HEADER
PCB 7K2BGIF
C45 470pF 250VAC
RESON INC.
DEBUG INTERFACE, 7K TEST
Size D
Document Number 11683
Rev A
Date: Tuesday, August 09, 2005
Sheet 1 of 1