ZONE	REV.	REVISIONS DESCRIPTION	DATE	APPROVED

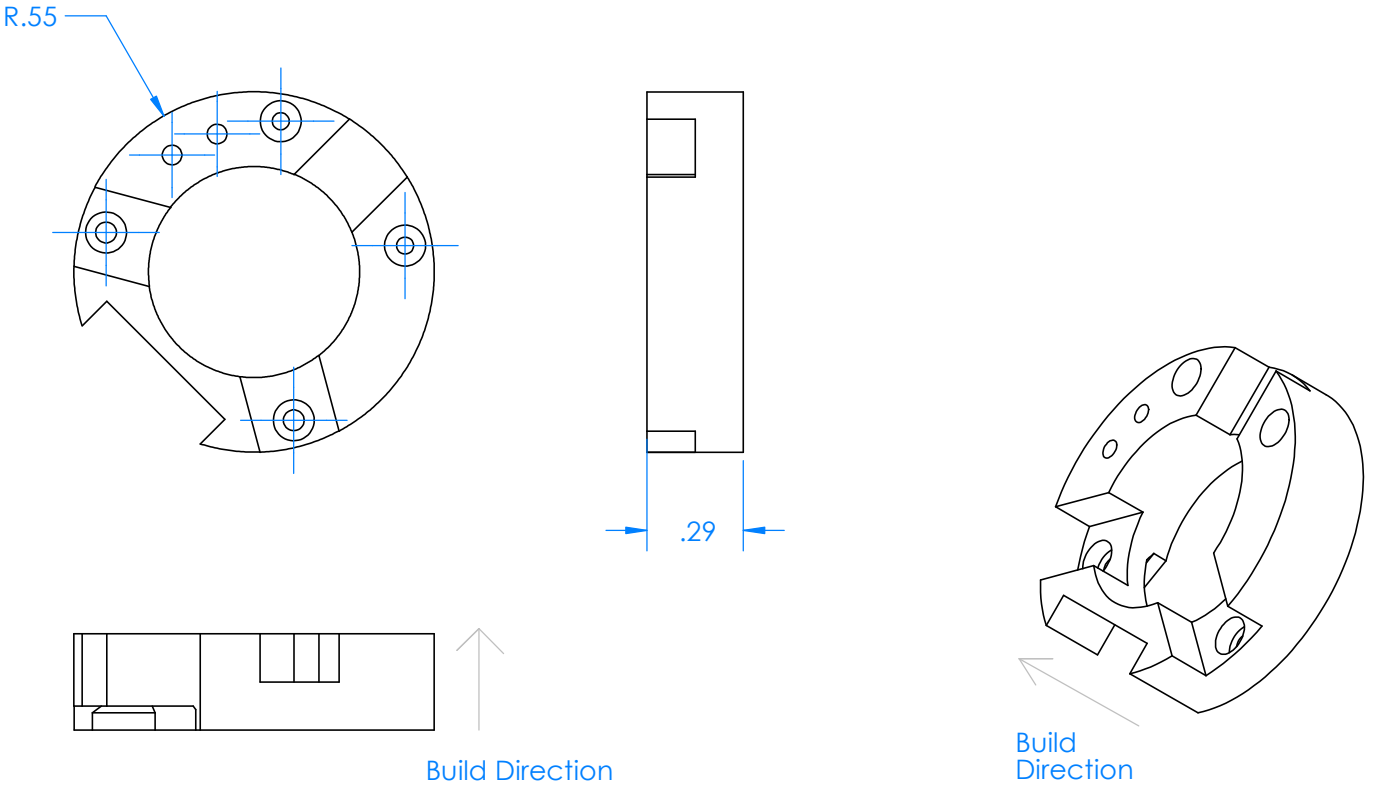

Status:

		DIMENSIONS ARE IN INCHES TOLERANCES: TWO PLACE DECIMAL ±0.02 THREE PLACE DECIMAL ±0.005 ANGLES: ±1° DRILLED HOLES: +.005 -.002	APPROVALS DATE DRAWN Jordan Caress 2/2/23 CHECKED ENGINEER	**Monterey Bay Aquarium Research Institute** **MBARI** **7700 Sandholdt RD.** **Moss Landing, CA 95039** **PH: (831) 775-1700**
		MATERIAL WaterShed XC 11122	PROJECT NO. 368000	Hard Stop, Limit Switch
NEXT ASSY	USED ON	FINISH --	PROJECT Dorado AUV	SIZE A · DWG. NO. · REV. B
APPLICATION		DO NOT SCALE DRAWING	WEIGHT	SCALE:2:1 · WEIGHT: · SHEET 1 OF 1