REVISIONS				
ZONE	REV.	DESCRIPTION	DATE	APPROVED
	X-02	UPDATES TO FIBER MOUNTING KIT	5/4/2018	
	X-03	REMOVED FIBER MOUNT KIT	3/22/2019	MW

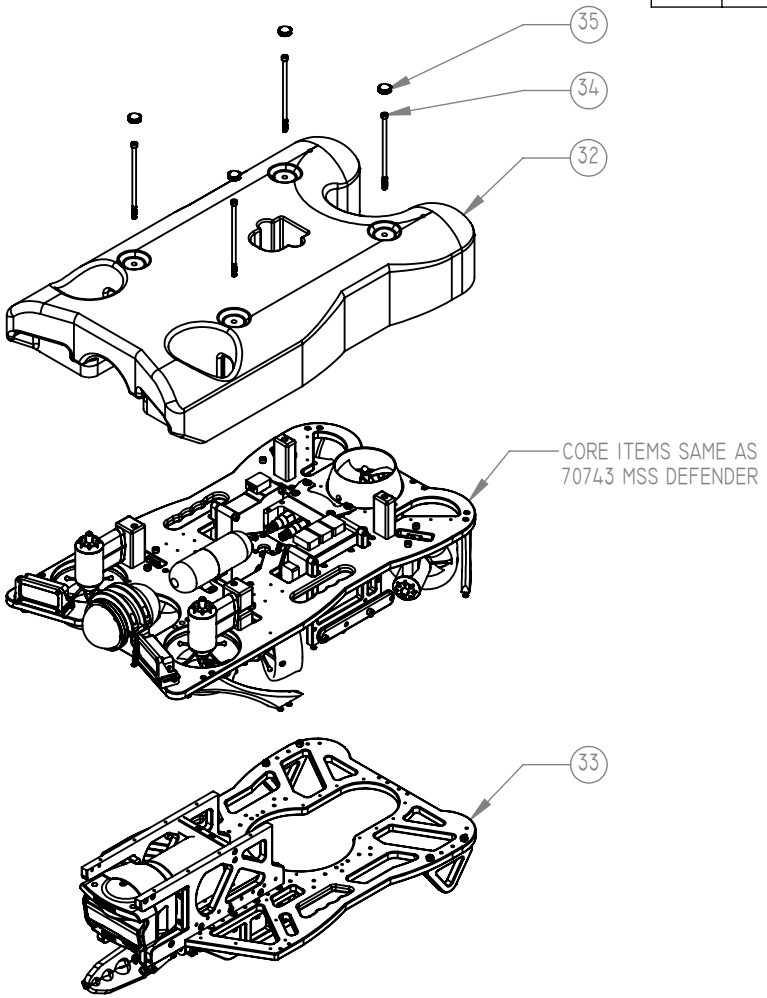

8	1615		1
1	70044	MSS HD Camera Module - 2000m rated	1
2	70160	M5 420v Power Module	1
3	70191	M5 Communication Module	1
4	70453	MSS Ballast Weight - 250g	3
5	70682	1 Atm IMU Housing Subassembly	1
6	70704	M5 THRUSTER ASSEMBLY WITH GUARD	7
7	70745	MSS Defender Frame Assembly	1
8	70776	LED LIGHT MOUNT ASSEMBLY	1
9	70776	LED LIGHT MOUNT ASSEMBLY	1
10	70865	M4 NYLON FLAT WASHER BLACK	2
11	70867	M5 NYLOCK HEX NUT 18-8 SS	2
12	70878	SHCS M6 X 12MM RENY BLACK	14
13	70879	SHCS M5 x 12MM 18-8 SS	2
14	70881	PLASTITE #6 X 1/2" 18-8 SS	4
15	70884	SHCS M6 X 55MM RENY BLACK	4
16	70885	SHCS M6 X 45MM RENY BLACK	4
17	70886	SHCS M6 X 35 MM 18-8 SS	2
18	70888	NORTEK DVL 1KMHz, 4000M ASSEMBLY	1
19	70932	MSS DVL 1K 300M ADAPTER PLATE	1
20	70962	SHCS M6 X 22MM 18-8 SS	4
21	70982	PLASTITE #8 x 1/2" 18-8 SS	2
22	71008	SHCS LOW PROFILE 1/4-20 X 3/8" LONG 316 SS	4
23	71015	MSS DVL 1K 1000M BOTTOM MOUNT BRACKET REAR	1
24	71019	MSS DVL 1K 1000M BOTTOM MOUNT PLATE REAR	1
25	71021	MSS DVL 1K 1000M SPACER BRACKET REAR	1
26	71022	SHCS M6 X 16MM 18-8 SS	2
27	71023	SHCS M5 X 30MM 18-8 SS	2
28	71024	MSS DVL 1K 1000M BOTTOM MOUNT PLATE FRONT	1
29	71025	MSS DVL 1K 1000M SPACER FRONT	2
30	71026	MSS DVL 1K 1000M BOTTOM MOUNT TAB FRONT	2
31	71027	SHCS M5 X 25MM 18-8 SS	2
32	71028	MSS Defender Float 2KM	1
33	71107	MSS DEFENDER 2KM ARM AND SONAR MOUNT KIT	1
34	71279	SHCS M6 X 140MM 18-8 SS	4
35	70869	M6 SOCKET HEAD SCREW KNOB BLACK	4

Notice of Proprietary Information
The information contained in this drawing is the sole property of VideoRay, LLC. Any reproduction in part or as a whole without the written permission of VideoRay, LLC is prohibited.

ALL DIMENSIONS ARE IN INCHES UNLESS OTHERWISE SPECIFIED INTERPRET DRAWING PER ASME Y14.5-1994

TOLERANCES UNLESS OTHERWISE SPECIFIED:

X.X	±0.03
X.XX	±0.010
X.XXX	±0.005
FRACTIONS	±1/16
ANGLES	±0.5

THIRD ANGLE

DRN:	TH	3/9/2018
CHK:	-	
APP:	-	

212 East High Street, Pottstown, PA 19464
USATEL: +1 610-458-3000 FAX: +1 610-458-3010
WWW.VIDEORAY.COM

TITLE:	MSS DEFENDER VEHICLE 2000M ASSEMBLY		
PART NO:	71014		SCALE:
MATERIAL:	-		
SHEET TITLE:	DRAWING		WEIGHT: -
REV: X-03	STATUS: DEVELOPMENT	SIZE: A	SHEET: 1 OF 1

PLOT DATE: 3/22/2019 2:28:05 PM