REVISIONS				
ZONE	REV.	DESCRIPTION	DATE	APPROVED
---	E	Sync to current Epicor Revision	07/12/2022	JKZ
---	F	Sync to current Epicor Revision	07/12/2022	JKZ
---	G	ADDED PLUGS & REPLACED STRAIN RELIEF	11/11/2022	MW

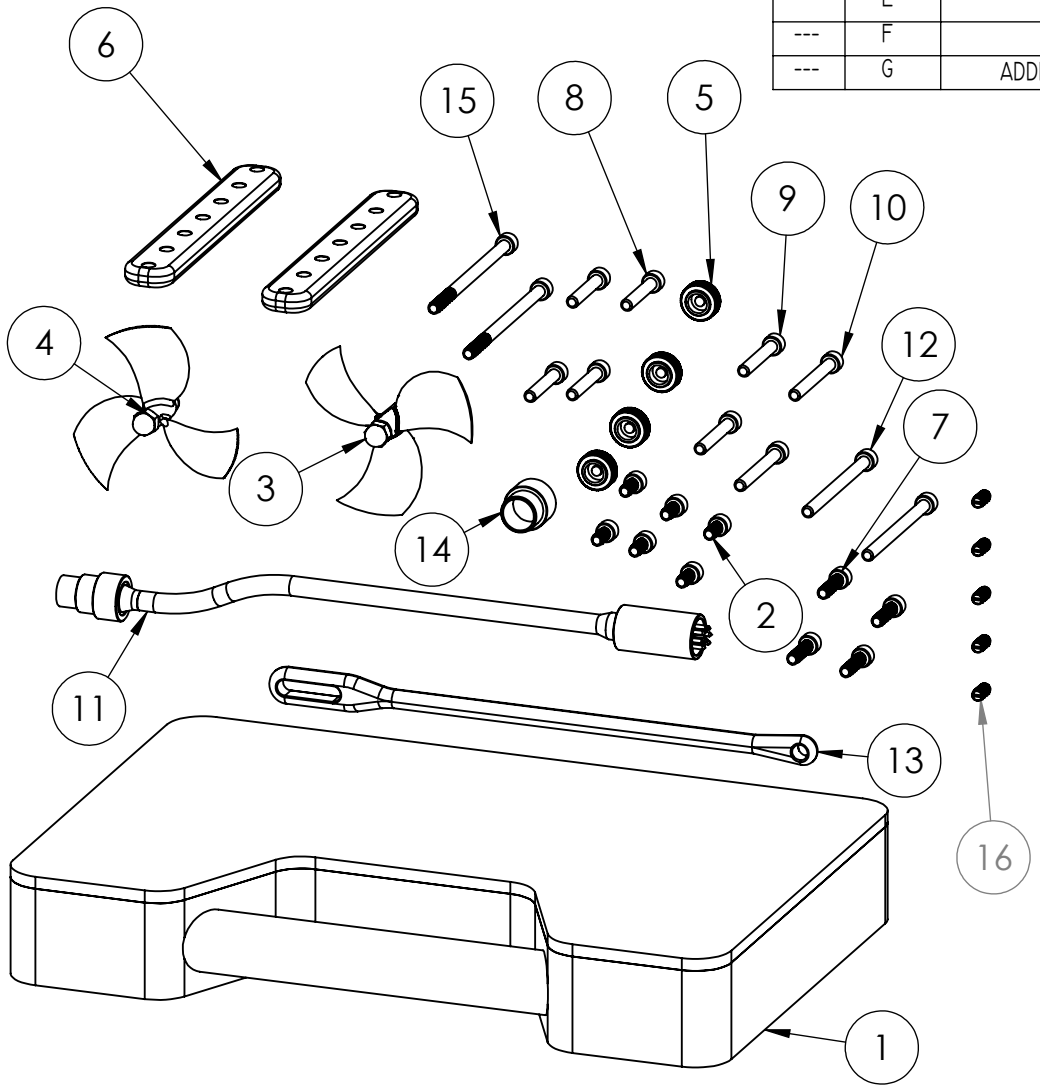

ITEM NO.	PART NUMBER	DESCRIPTION	QTY.
1	71411	MSS Defender Hardware Kit Box	1
2	70878	SHCS M6 X 12MM RENY BLACK	6
3	70950	95mm 3 Blade Propellor Left 5mm Collet	1
4	70951	95mm 3 Blade Propellor Right 5mm Collet	1
5	70869	M6 SOCKET HEAD SCREW KNOB BLACK	4
6	70453	MSS Ballast Weight - 250g	2
7	70962	SHCS M6 X 22MM 18-8 SS	4
8	70886	SHCS M6 X 35 MM 18-8 SS	4
9	71417	SHCS M6 X 40MM 18-8 SS	2
10	71418	SHCS M6 X 50MM 18-8 SS	2
11	DD8-001MF-ASSM	Tether Assembly Double Ended Connector Male/Female	1
12	71525	SHCS M6 X 80MM 18-8 SS	2
13	74040	Overmolded 11" Strain relief	1
14	THR-ENDCP-M	TETHER 8 PIN PART DUMMY CAP MALE	1
15	70876	SHCS M6 X 100 MM 18-8 SS	2
16	74068	Ballast Hole Plug	5

Notice of Proprietary Information

The information contained in this drawing is the sole property of VideoRay, LLC. Any reproduction in part or as a whole without the written permission of VideoRay, LLC is prohibited.

Tolerances unless otherwise specified:

X.X	±0.03
X.XX	±0.010
X.XXX	±0.005
FRACTIONS	±1/16
ANGLES	±0.5

VideoRay

THIRD ANGLE

DRN:	JKZ	07/11/2022
CHK:	JKZ	07/11/2022
APP:	JKZ	07/11/2022

212 East High Street, Pottstown, PA 19464
USATel: +1 610-458-3000 FAX: +1 610-458-3010
www.videoray.com

TITLE: MSS Hardware and Fastener Kit

PART NO: 71016 SCALE:

MATERIAL: ---

SHEET TITLE: Sheet1 WEIGHT:

REV: G STATUS: PRODUCTION SIZE: A SHEET: 1 OF 1

PLOT DATE: 8/2/2023 4:22:00 PM