Connect Tech Inc.

"Meeting your objectives ... by design"

Xtreme/104 Opto

Multi-port Serial Communications Adapter

User Manual

Connect Tech Inc
42 Arrow Road
Guelph, Ontario
N1K 1S6
Tel: 519-836-1291
800-426-8979
Fax: 519-836-4878
Email: sales@connecttech.com
support@connecttech.com
FTP: ftp.connecttech.com
URL: http://www.connecttech.com

CTIM-00007, Revision 0.00 August 31 2000
Part Number: MAN045

Limited Warranty

Connect Tech Inc. warrants to the original purchaser of this Connect Tech hardware product that it is to be in good working order for a period of one year from the date of purchase from Connect Tech Inc. or an authorized Connect Tech dealer. Should this product, in Connect Tech Inc.'s opinion, fail to be in good working order during the warranty period, Connect Tech Inc. will, at its option, repair or replace this product at no charge, **provided that the product has not been subjected to abuse, misuse, accident, disaster or non Connect Tech Inc. authorized modification or repair.**

You may obtain Limited Warranty service by delivering this product to an authorized Connect Tech dealer or to Connect Tech Inc. along with proof of purchase. If this product is shipped, you agree to insure the product or assume risk of loss or damage in transit, and to prepay shipping charges to the warranty repair location.

The above warranty is the only warranty authorized by Connect Tech Inc. **under no circumstances will Connect Tech Inc. be liable in any way for any damages, including any lost profits, lost savings or other incidental or consequential damages arising out of the use of, or inability to use, such product**

Copyright Notice

The information contained in this document is subject to change without notice. Connect Tech shall not be liable for errors contained herein or for incidental consequential damages in connection with the furnishing, performance, or use of this material. This document contains proprietary information that is protected by copyright. All rights are reserved. No part of this document may be photocopied, reproduced, or translated to another language without the prior written consent of Connect Tech, Inc.

Copyright © 2000 by Connect Tech, Inc.

Trademark Acknowledgment

Connect Tech, Inc. acknowledges all trademarks, registered trademarks and/or copyrights referred to in this document as the property of their respective owners.

Not listing all possible trademarks or copyright acknowledgments does not constitute a lack of acknowledgment to the rightful owners of the trademarks and copyrights mentioned in this document.

Certification

Xtreme/104 Opto

The Xtreme/104 Opto product family is to be included into a device ultimately subject to FCC, DOC/IC, and CE certification. The customer is responsible for bringing the completed device into compliance prior to resale.

Connect Tech has designed the Xtreme/104 Opto with EMI and EMC considerations such as:

- Ground and power planes
- Controlled slew-rate signals
- EMI/EMC reducing PCB layout

Table of Contents

Product Overview 1
Xtreme/104 Opto Adapter 1
Optical Isolation 2

Hardware Installation 5
Port Addresses 5
Status Port Addresses 5
Custom Port Addresses 5
Interrupt Selection 6
Baud Rate Selection 9

Software Installation 11
Windows NT 11
Utilities 11
Portfind 11
Porttest 11
SeePORT 11

Specifications 13
Operating Environment 13
Power Requirements 13
PC Bus Interface 13
Communications 13
Control Signals 13
Dimensions 14
Connectors/Interface 14
Part Numbers 14

Connectors/Pinouts 15

Factory Default Settings 17

RS-232/RS-485/422 Interfaces 19
Electrical Interface Selection 19
Full Duplex Mode 20
Half Duplex RS-485 21
Multi-drop Slave Mode 22
Line Termination 23
RS-485/422 Cable Wiring 24

List of Tables

Table 1: Port address settings 5
Table 2: Baud rates 9
Table 3: P4/P5/P6/P7 - 10 pin port header pinouts..... 15
Table 4: DB-9 cable connector pinouts 16

List of Figures

Figure 1: Xtreme/104 Opto adapter 3
Figure 2: RS-485/422 wiring diagram (4 wire) 24
Figure 3: RS-485/422 wiring diagram (2 wire) 24

Product Overview

The Xtreme/104 Opto adapters are high performance multi-port serial adapters in a PC/104 form factor that allow you to connect up to 8 serial devices.

Your Xtreme/104 Opto product consists of the following components:

- Xtreme-2/104 Opto or Xtreme-4/104 Opto adapter
- Xtreme/104 Opto Windows 95/98 device drivers

Note: *You can also order standard cables for the Xtreme/104 Opto*

Xtreme/104 Opto Adapter

Xtreme/104 Opto adapters provide high speed interfaces between a host computer and multiple external serial devices. Xtreme/104 Opto adapters include features such as:

- Two or four asynchronous serial ports.
- Both RS-232 and RS-485/422 electrical interfaces. The interfaces are jumper selectable for each port.
- Multiple Xtreme/104 Opto adapters may reside in a system.
- 16C2850 dual UARTs control each port. The 16C2850 has 128 byte TxD and RxD FIFO buffers for each port and automatic software/hardware flow control.
- Each port has independent baud rate selection offering baud rates from 50 – 230.4 KBPS (RS-232) and 50 – 460.8 KBPS (RS-485/422), with 5, 6, 7 or 8 data bits and 1, 1.5, 2 stop bits, odd or even parity.
- On board jumpers allow the selection of 8 predefined I/O address sets.
- On board jumpers allow the selection of 1,2 or 4 IRQ lines. You can choose from interrrupts 3, 4, 5, 6, 7, 9, 10, 11, 12, 14 and 15.
- Each port is individually optically isolated up to 1kV AC peak to peak
- Driver support for Windows 95/98/NT/2000. Also compatible with operating systems featuring 16450/16550 serial drivers such as: Linux, BSD/OS, QNX, DOS, Solaris, OS/2 (3RD party driver) and SCO Unix

Optical Isolation

The Xtreme/104 Opto uses optocouplers and isolated DC to DC converters to achieve optical isolation. The board will provide **1K VAC** peak to peak isolation between each port and between each port and your system. However there are some considerations to note.

1. Optical isolation can degrade if the board is subjected to high humidity, especially conditions that are right for condensation to occur.
2. Optical isolation can degrade if airborne dust is allowed to accumulate on the surface of the board.
3. **An Electrical Shock hazard could exist** depending on what equipment is connected to the Xtreme/104 Opto**.** Under these circumstances the wiring and/or cabling leading to the serial port connections may have high voltages on them. You must use appropriately insulated cables in these situations.
4. Please contact your Connect Tech Technical Support Specialist for any questions related to the application of optical isolation.

Figure 1 shows the locations of various hardware components of the Xtreme/104 Opto adapter.

Figure 1: *Xtreme/104 Opto adapter*

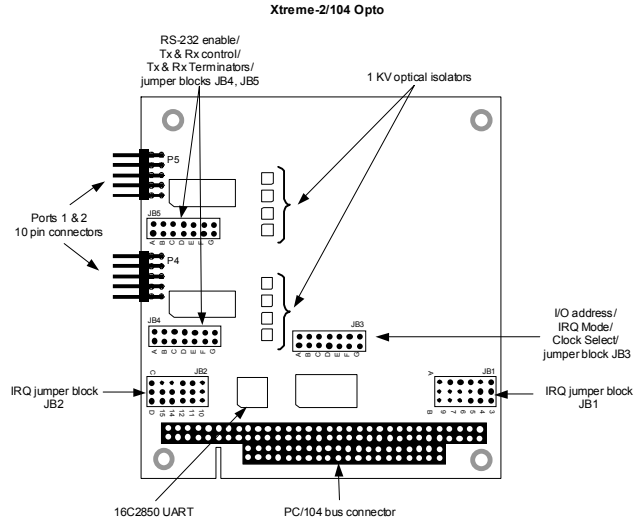

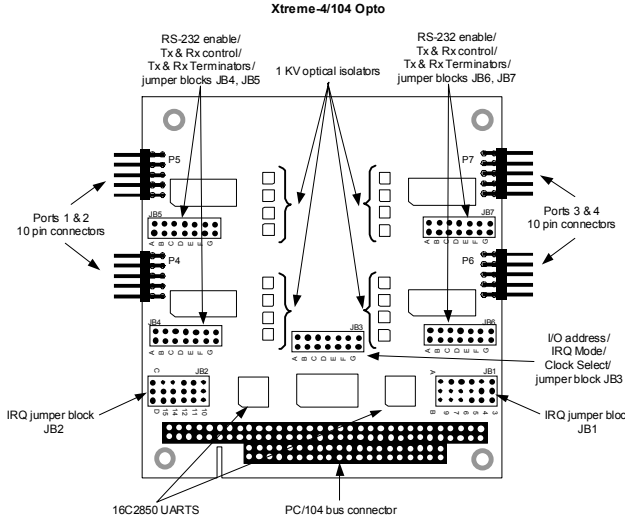

Hardware Installation

Port Addresses

Port addresses are configured with the jumper block JB3 on the Xtreme/104 Opto adapter. Jumpers A, B, and C select a set of port addresses for the ports

Status Port Addresses

Some operating system device drivers can utilize an Interrupt Status Port, for example Windows NT offers it as an option and for SCO Unix it is mandatory. This can improve your system's efficiency. The Xtreme/104 Opto offers a status port and this port is enabled and disabled using jumper F on jumper block JB3.

Please refer to **Table 1** for a list of supported status port addresses and to **Figure 1** for a description and location of jumper block JB3

Technical tip:
Please make certain that the Status Port Enable jumper is disabled if your application is not using the Status Port. This eliminates the possibility of an address conflict with another device in your system.

Custom Port Addresses

You can generate other port addresses by making changes to the CPLDs found on the Xtreme/104 Opto adapter. If you require specific port addresses not listed in **Table 1** please contact a Connect Tech Customer Service Representative for further information.

Table 1: *Port address settings*

Jumper			Ports				
C	B	A	1	2	3	4	Status
on	on	on	150	158	160	168	190
on	on	off	250	258	260	268	290
on	off	on	1A0	1A8	1B0	1B8	1E0
on	off	off	2A0	2A8	2B0	2B8	2E0
off	on	on	100	108	110	118	140
off	on	off	200	208	210	218	240
off	off	on	380	388	390	398	3C0
off	off	off	300	308	310	318	340

Note: *Port addresses are expressed in hex*

Example 1	*Example 2*
The following example shows the port address jumper block set for port addreses 2A0, 2A8, 2B0, 2B8 (hex) and status port disabled	*The following example shows the port address jumper block set for port addreses 100, 108, 110, 118 (hex) and status port 140 (hex) enabled.*
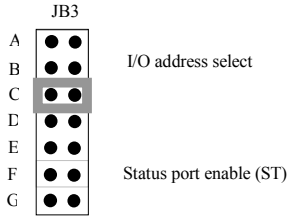	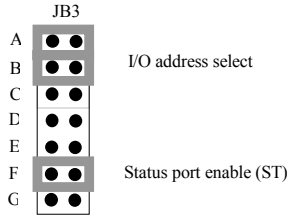

Interrupt Selection

You can configure an interrupt request line (IRQ) with the jumper blocks JB1, JB2 and JB3 on the Xtreme/104 Opto adapter. Please refer to **Figure 1** for a description and location of the jumper blocks JB1, JB2 and JB3.

You are able to configure the Xtreme/104 Opto adapter for four different IRQ modes.

- **Mode 1 (one IRQ)**:
  1. First you make sure there are no jumpers across positions E and D on the JB3 jumper block
  2. All ports interrupting on one IRQ by setting jumpers on the A or C rows and the middle rows of jumper blocks JB1 or JB2.
- **Mode 2 (two IRQs)**:
  1. First you jumper position D on the JB3 jumper block
  2. The odd ports (ports 1, 3) interrupt on one IRQ by setting jumpers on the B or D rows and the middle rows of jumper blocks JB1 or JB2.
  3. The even ports (ports 2, 4) interrupt on one IRQ by setting jumpers on the A or C rows and the middle rows of jumper blocks JB1 or JB2.

- **Mode 3 (two IRQs)**:
  1. First you jumper position E on the JB3 jumper block
  2. The first two ports (ports 1, 2) interrupt on one IRQ by setting jumpers on the A or C rows and the middle rows of jumper blocks JB1 and JB2.
  3. The last two ports (ports 3, 4) interrupt on one IRQ by setting jumpers on the B or D rows and the middle rows of jumper blocks JB1 and JB2.

- **Mode 4 (four IRQs)**:
  1. First you jumper positions D and E on the JB3 jumper block
  2. To set an IRQ for Port 1 install a jumper across a pair of pins on A row and the middle row of IRQ block JB1.
  3. To set an IRQ for Port 2 install a jumper across a pair of pins on B row and the middle row of IRQ block JB1.
  4. To set an IRQ for Port 3 install a jumper across a pair of pins on C row and the middle row of IRQ block JB2.
  5. To set an IRQ for Port 4 install a jumper across a pair of pins on D row and the middle row of IRQ block JB2.

Example: Mode 1 – one IRQ

The following example shows the settings on JB3 and the IRQ jumper block JB1 so that all ports will interrupt on IRQ 4.

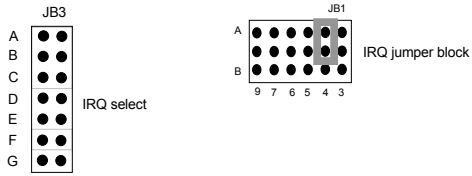

Example: Mode 2 – two IRQs

The following example shows the settings on JB3 and the IRQ jumper blocks JB1 and JB2 so that ports 1, 3 will interrupt on IRQ 7 and ports 2, 4 will interrupt on IRQ 12.

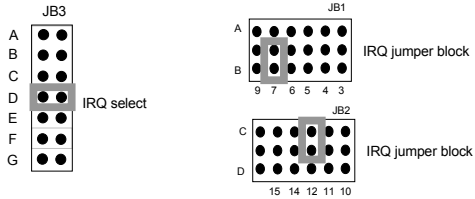

Example: Mode 3 – two IRQs

The following example shows the settings on JB3 and the IRQ jumper blocks JB1 and JB2 so that ports 1, 2 interrupt on IRQ 7 and ports 3, 4 interrupt on IRQ 10.

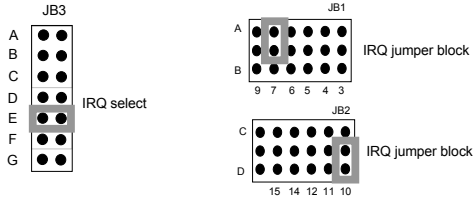

Example: Mode 4 – four IRQs

The following example shows the settings on JB3 and the IRQ jumper blocks JB1 and JB2 so that Port 1interrupts on IRQ 7, Port 2 interrupts on IRQ 4, Port 3 interrupts on IRQ 12, and Port 4, interrupts on IRQ 10.

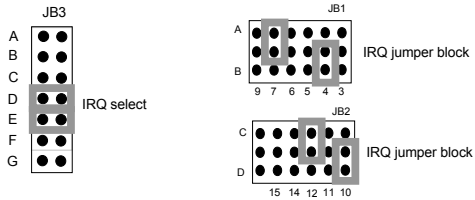

Baud Rate Selection

The Xtreme/104 Opto is capable of baud rates up to 460.8 kbps (4X oscillator) or 115.2 kbps (1X oscillator) depending on whether a shorting block is installed across position G on the JB3 jumper block. Please refer to **Figure 1** for a description and location of the jumper block JB3. Please refer to **Table 2** for a list of standard and extended baud rates for the Xtreme/104 Opto.

Example

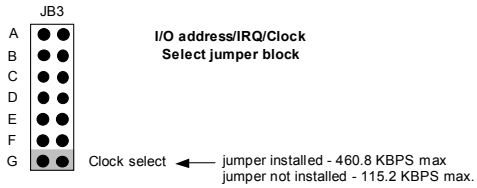

Note: *You must reset your system when you change the clock select setting.*

Table 2: Baud rates

Standard Baud Rate. (1X - set in software)	Max. Baud Rate (4X standard)
50	200
75	300
150	600
300	1200
600	2400
1200	4800
2400	9600
4800	19.2K
7200	28.8K
9600	38.4K
19.2K	76.8K
38.4K	153.6K
57.6K	230.4K
115.2K	460.8K

Software Installation

Windows NT

Windows NT and its standard serial driver allow users to configure their computer systems with multiple serial ports sharing one IRQ.

Please refer to the **WINNT.TXT** file on the Xtreme/104 Opto distribution diskette for more information about installing the Xtreme/104 Opto for the Windows NT operating system.

Utilities

Portfind

Portfind is a utility that verifies the I/O port addresses and IRQs of the serial ports in your system. For more information on the use of Portfind, please refer to the readme file **portfind.txt** on the Xtreme/104 Opto distribution diskette.

Porttest

Porttest is a utility that performs loopback tests on the RxD, TxD, RTS, CTS, DTR, and DCD signals of the serial ports in your system. For more information on the use of Porttest, please refer to the readme file **porttest.txt** on the Xtreme/104 Opto distribution diskette.

SeePORT

SeePORT is a Windows 95/98, full-featured serial data analyzer software application included with the Xtreme/104 Opto adapter. This handy utility enables the user to examine the data associated with any serial port including the modem control signal states. You can quickly identify serial port related support issues using the information gathered by SeePORT.

For more information on the use of SeePORT, please refer to the readme file **README.TXT** on the Xtreme/104 Opto distribution diskette under the SeePORT directory.

Specifications

Operating Environment

- Storage temperature: -65° C to 150° C
- Operating temperature: 0° C to 70° C (standard version)
  -40° C to 85° C (industrial version)
- Humidity: 0 to 90% relative humidity, non-condensing

Power Requirements

- ***Xtreme-2/104 Opto; Xtreme-4/104 Opto***
  +5 VDC +/-5% @ 260 mA (typical)

PC Bus Interface

- PC interrupts are jumper selectable, (3, 4, 5, 6, 7, 9, 10, 11, 12, 14, 15)
- Base address for I/O ports is jumper selectable, requires 8 addresses
- One PC/104 expansion connector

Communications

UARTs

- 16C2850 dual UARTs communication controllers
- On chip 128 byte TxD and RxD FIFO buffers per port
- Automatic RTS/CTS (Hardware) flow control
- Automatic XON/XOFF (Software) flow control
- Compatible with 16550 style software drivers

RS-232

- Programmable baud rate generator - up to 230.4.8K baud on all RS-232 ports
- Full duplex, point to point

RS-485/422

- Programmable baud rate generator - up to 460.8K baud on all RS-485/422 ports
- Full duplex, point to point or multi-drop
- Half duplex, point to point or multi-drop
- Jumper selectable RxD and TxD line termination resistors
- Compatible with RS-422

Control Signals

- RS-232 TxD; RxD; RTS; CTS
- RS-485/422 RTS ±; TxD ±; CTS ±; RxD ±

Dimensions

- ***Xtreme/104 Opto PCB***

  Length: 10.40 cm (4.09 inches) – includes connectors
  Height: 1.10 cm (0.43 inches)
  Width: 9.60 cm (3.78 inches)
  Compliant to PC/104 Specification 2.3

Connectors/Interface

- ***Xtreme-2/104 Opto***

  Two 10 pin header connectors
- ***Xtreme-4/104 Opto***

  Four 10 pin header connectors

Part Numbers

Xtreme-2/104 Opto

1040290101	Xtreme/104 Opto, 2 port, c/w 16C2850 UARTs, with cable

Xtreme-4/104 Opto

1040490101	Xtreme/104 Opto, 4 port, c/w 16C2850 UARTs, with cable

Connectors/Pinouts

Table 3: *P4/P5/P6/P7 - 10 pin port header pinouts*

Pin No.	RS-232	Direction	RS-485/422	Direction
1	NC	NC	RxD (+)	input
2	NC	NC	CTS (-)	input
3	RxD	input	RxD (-)	input
4	RTS	output	RTS (+)	output
5	TxD	output	TxD (+)	output
6	CTS	input	CTS (+)	input
7	NC	NC	TxD (-)	output
8	NC	NC	RTS (-)	output
9	Isolated Gnd	signal gnd.	Isolated Gnd	signal reference
10	N/A	N/A	N/A	N/A

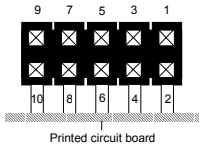

Table 4: *DB-9 cable connector pinouts*

Pin No.	RS-232 Signal	Direction	RS-485/422 Signal	Direction
1	NC	NC	RxD (+)	input
2	RxD	input	RxD (-)	input
3	TxD	output	TxD (+)	output
4	NC	NC	TxD (-)	output
5	Isolated Gnd	signal gnd	Isolated Gnd	signal reference
6	NC	NC	CTS (-)	input
7	RTS	output	RTS (+)	output
8	CTS	input	CTS (+)	input
9	NC	NC	RTS (-)	output

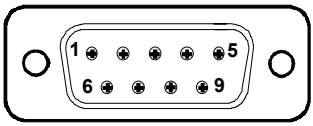

Technical Tip:

1. ***You must connect pin 5 (the isolated ground) to the ground of the external device you are connecting to.***
2. *Please ensure that you terminate the CTS signal if your application does not use them. The common way to do this is to connect CTS to RTS. Failure to do so may result in a loss of a performance on your Xtreme/104 Opto adapter.*

Factory Default Settings

Function	Factory Setting
I/O Port Address	JB3 is set for I/O port addresses 300, 308, 310, 318 hex and the status port disabled (positions A, B, C, not jumpered)
Status Port Address	JB3 is set for the status port disabled (position F not jumpered)
Baud Rate	JB3 is set for the maximum baud rate of 115.2 KBPS (position G not jumpered)
IRQs	1. JB3 set for all ports interrupting on a single interrupt (positions D & E not jumpered) 2. JB1 and JB2 jumper blocks set for no interrupts (all positions not jumpered)
Electrical Interface	JB4, JB5, JB6 and JB7 set for all ports RS-485/422 (position B not jumpered)
RS-485 Mode	JB4, JB5, JB6 and JB7 set for all ports running in full duplex mode (positions A and C not jumpered)
Termination	JB4, JB5, JB6 and JB7 set for all ports being not terminated. (positions D, E, F and G not jumpered)
Note: *Please see* ***Figure 1*** *for the locations of these jumper blocks.*	

RS-232/RS-485/422 Interfaces

Electrical Interace Selection

The Xtreme/104 Opto adapter provides jumper selectable RS-232 and RS-485/422 electrical interfaces on each port.

Jumper blocks JB4, JB5, JB6 and JB7 set the electrical interfaces for the individual ports, with JB4 for Port 1; JB5 for Port 2; JB6 for Port 3; and JB7 for Port 4. Jumpers installed across position B on JB4, JB5, JB6 and JB7 enable the RS-232 interface for that port, while jumpers not installed across position B enable the RS-485/422 interface for that port**. Figure 1** shows the locations of jumper blocks JB4, JB5, JB6 and JB7.

Example 1	*This example shows the settings on JB4 and JB5 jumper blocks so that port 1 is set for RS-232 and port 2 is set for RS-485/422.* 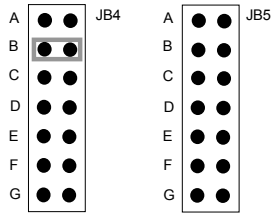
Example 2	*This example shows the settings on JB4, JB5, JB6 and JB7 jumper blocks so that ports 1, 2 are set for RS-485/422 and ports 3,4 are set for RS-232.* 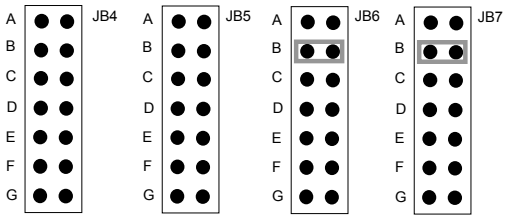

Technical Note:
You can set up the RS-232 serial ports to run at up to 230.4 KBPS, but you must use good quality serial cables with lengths that do not exceed 2 metres.

Full Duplex Mode

By making sure that there are no jumpers on positions A and C of jumper blocks JB4, JB5, JB6 and JB7 you can run the individual RS-485/422 ports in full duplex mode. In this mode, TxD & RxD are active all the time. This mode is typically used in point to point situations much like RS-232.

Figure 1 shows the locations of jumper block JB4, JB5, JB6, JB7 and J1, J2.

Example

The example below shows the settings on JB4, JB5, JB6, and J1, J2 where RS-485 ports 1, 2 and 3 are set for full duplex mode. Port 4 is RS-232 and therefore is not set for full duplex

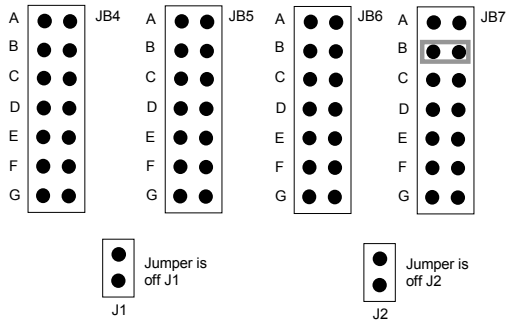

Technical Note:

J1 controls ports 1 and 2 and J2 controls ports 3 and 4. If both ports 1 and 2 are set for full duplex then J1 should not be jumpered. If both ports 3 and 4 are set for full duplex then J2 should not be jumpered.

Half Duplex RS-485

By jumpering positions A and C of jumper blocks JB4, JB5, JB6 and JB7 you can run the individual RS-485/422 ports in half duplex mode. In this mode your Xtreme/104 Opto adapter controls the transmitter and receiver circuits. RTS is turned on prior to and during transmission to cause the transmit driver to enable and the receiver to disable. RTS is turned off when not transmitting to cause the transmit driver to disable (tri-stated) and the receiver to enable. The Xtreme/104 Opto adapter is responsible for timing the RTS toggle

Figure 1 shows the locations of jumper block JB4, JB5, JB6, JB7 and J1, J2.

Example

The example below shows the settings on JB4, JB5, JB6, and J1, J2 where RS-485 ports 1, 2 are set for half duplex mode. Ports 3, 4 are RS-232 and therefore should not be set for half duplex

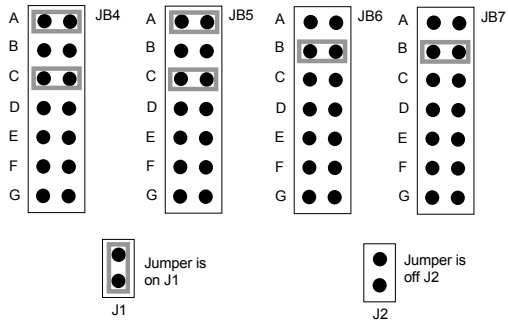

Technical Note:

J1 controls ports 1 and 2 and J2 controls ports 3 and 4. If both ports 1 and 2 are set for full duplex then J1 should not be jumpered. If both ports 3 and 4 are set for full duplex then J2 should not be jumpered.

Multi-drop Slave Mode

By jumpering positions A and C of jumper blocks JB4, JB5, JB6, JB7 and by jumpering J1(ports 1 & 2) or J2(ports3 & 4) you can run the individual RS-485/422 ports in multi-drop slave mode.In this mode the TxD line driver is enabled only when data is transmitted and RxD is enabled all the time. This mode is typically used in multi-drop "4 wire" connections.

Figure 1 shows the locations of jumper block JB4, JB5, JB6, JB7 and J1, J2.

Example

The example below shows the settings on JB4, JB5, JB6, and J1, J2 where RS-485 ports 1, 2 are set for multi-drop slave mode. Ports 3, 4 are RS-232 and therefore should not be set for multi-drop slave mode

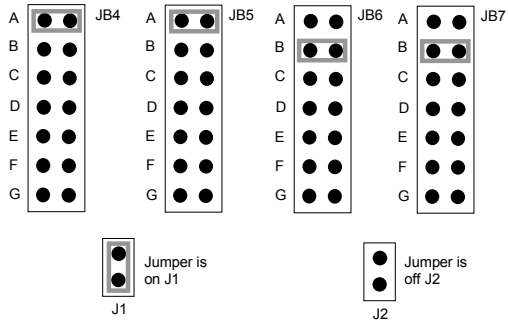

Technical Note:

J1 controls ports 1 and 2 and J2 controls ports 3 and 4. If both ports 1 and 2 are set for full duplex then J1 should not be jumpered. If both ports 3 and 4 are set for full duplex then J2 should not be jumpered.

Line Termination

Jumper blocks JB4, JB5, JB6 and JB7 can terminate the transmitters and receivers on the individual RS-485/422 ports through jumper selectable 120 Ω fixed resistors.

Please refer to **Figure 1** for the locations of JB4, JB5, JB6, JB7 and J1, J2.

Example

The following example shows the settings on JB4, JB5, JB6 and JB7 where the half duplex RS-485 port 1is terminated, the full duplex RS-485 port 2 is terminated, the multi-drop slave RS-485 port 3 is not terminated, and the RS-232 port 4 is not and should not be terminated

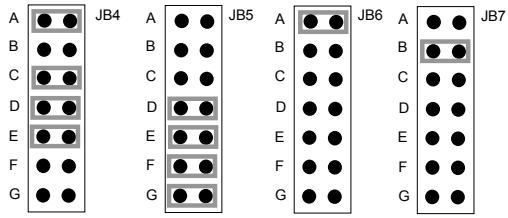

Technical Notes:

1. *For half duplex RS-485 ports you only jumper positions D and E on the appropriate jumper block (JB4, JB5, JB6 or JB7) if you want them terminated.*
2. *For full duplex and multi-drop slave you can jumper positions D, E, F, and G on the appropriate jumper block (JB4, JB5, JB6 or JB7) if you want them terminated.*
3. *For RS-232 ports do not jumper positions D, E, F and G on the appropriate jumper block (JB4, JB5, JB6 or JB7).*

RS-485/422 Cable Wiring

Figure 2 describes a 4 wire cabling scheme between a port on the Xtreme/104 Opto adapter to a port on the RS-485/422 peripheral.

Figure 2: *RS-485/422 wiring diagram (4 wire)*

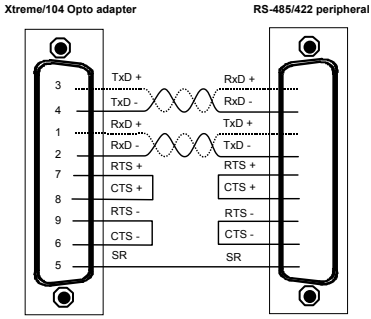

Figure 3 describes a 2 wire cabling scheme between a port on the Xtreme/104 Opto adapter to a port on the RS-485/422 peripheral.

Figure 3: *RS-485/422 wiring diagram (2 wire)*

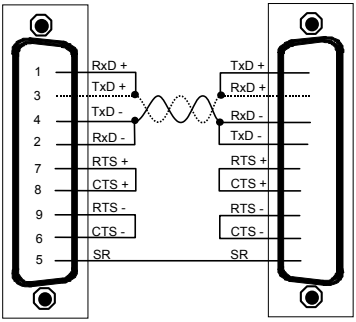

Technical Tips:

1. *The RS-485/422 electrical interface consists of a differential signaling scheme.* ***You should always connect the signals with twisted pairs.***
2. *Signal reference* ***must be connected.***