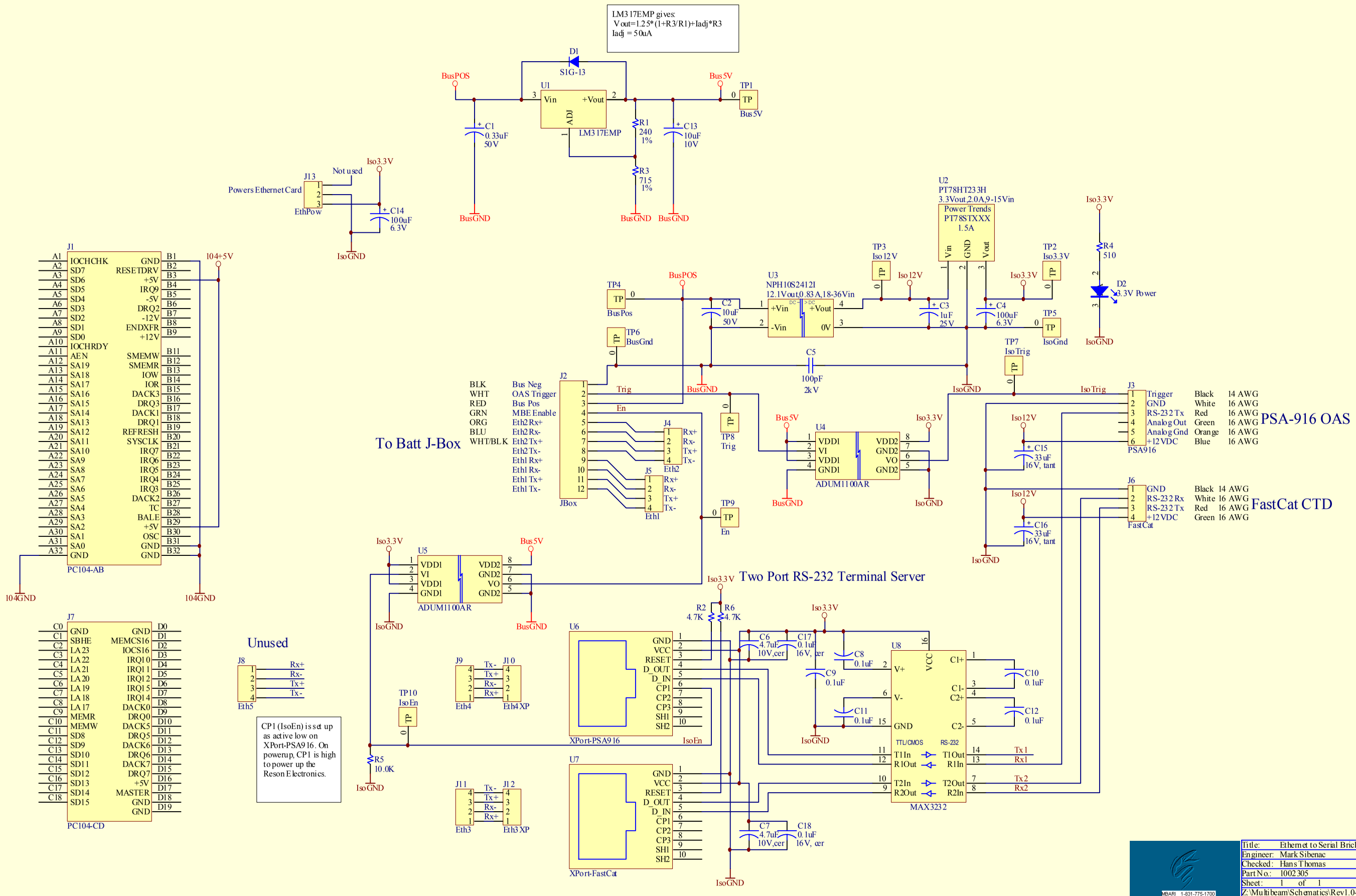
LM317EMP gives:
Vout=1.25*(1+R3/R1)+Iadj*R3
Iadj = 50uA
D1
S1G-13
U1
Vin
+Vout
ADJ
LM317EMP
BusPOS
Bus5V
TP1
Bus5V
C1
0.33uF
50V
R1
240
1%
R3
715
1%
C13
10uF
10V
BusGND
J13
Powers Ethernet Card
Not used
EthPow
Iso3.3V
C14
100uF
6.3V
IsoGND
J1
PC104-AB
I04+5V
I04GND
U2
PT78HT233H
3.3Vout,2.0A,9-15Vin
Power Trends
PT78STXXX
1.5A
Vin
GND
Vout
TP3
Iso12V
TP2
Iso3.3V
R4
510
D2
3.3V Power
U3
NPH10S2412I
12.1Vout,0.83A,18-36Vin
+Vin
-Vin
+Vout
0V
C2
10uF
50V
C3
1uF
25V
C4
100uF
6.3V
TP5
IsoGnd
TP4
BusPos
TP6
BusGnd
C5
100pF
2kV
TP7
IsoTrig
J2
JBox
BLK Bus Neg
WHT OAS Trigger
RED Bus Pos
GRN MBE Enable
ORG Eth2 Rx+
BLU Eth2 Rx-
WHT/BLK Eth2 Tx+
Eth2 Tx-
Eth1 Rx+
Eth1 Rx-
Eth1 Tx+
Eth1 Tx-
Trig
En
To Batt J-Box
J4
Eth2
J5
Eth1
TP8
Trig
TP9
En
U4
ADUM1100AR
VDD1
VI
VDD1
GND1
VDD2
GND2
VO
GND2
J3
PSA916
Trigger Black 14 AWG
GND White 16 AWG
RS-232 Tx Red 16 AWG
Analog Out Green 16 AWG
Analog Gnd Orange 16 AWG
+12VDC Blue 16 AWG
PSA-916 OAS
C15
33uF
16V, tant
J6
FastCat
GND Black 14 AWG
RS-232 Rx White 16 AWG
RS-232 Tx Red 16 AWG
+12VDC Green 16 AWG
FastCat CTD
C16
33uF
16V, tant
U5
ADUM1100AR
Two Port RS-232 Terminal Server
R2
4.7K
R6
4.7K
J7
PC104-CD
Unused
J8
Eth5
Rx+
Rx-
Tx+
Tx-
CP1 (IsoEn) is set up as active low on XPort-PSA916. On powerup, CP1 is high to power up the Reson Electronics.
TP10
IsoEn
R5
10.0K
J9
Eth4
J10
Eth4XP
U6
XPort-PSA916
GND
VCC
RESET
D_OUT
D_IN
CP1
CP2
CP3
SH1
SH2
IsoEn
J11
Eth3
J12
Eth3XP
U7
XPort-FastCat
C6
4.7uF
10V,cer
C17
0.1uF
16V, cer
C8
0.1uF
C9
0.1uF
C11
0.1uF
U8
MAX3232
VCC
V+
V-
GND
C1+
C1-
C2+
C2-
TTL/CMOS
RS-232
T1In
R1Out
T2In
R2Out
T1Out
R1In
T2Out
R2In
Tx1
Rx1
Tx2
Rx2
C10
0.1uF
C12
0.1uF
C7
4.7uF
10V,cer
C18
0.1uF
16V, cer
Title: Ethernet to Serial Brick for Mapping AUV Nose
Engineer: Mark Sibenac
Checked: Hans Thomas
Part No.: 1002305
Rev: 1
Sheet: 1 of 1
Date: 12-Feb-2004
Z:\Multibeam\Schematics\Rev1.0-EthSerialBrick\EthSerialBrick-sch.SchDoc