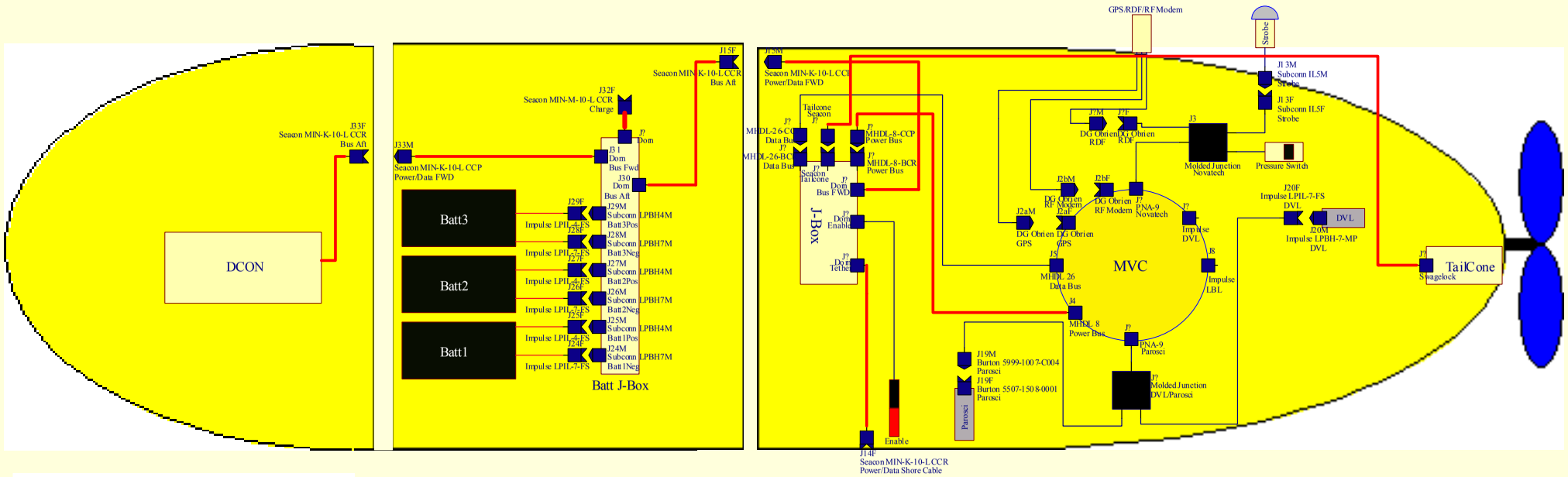

NOTES:

Raw Power/Data Bus Cable:

Raw Power on Cable:

Penetrator:

Plug:

Receptacle:

Title	ALTEX AUV System Block Diagram	
Engineer:	Mark Sibenac	
Checked :	*	
Part No.:	AUV 00200	Rev: 1
Sheet:	1 of 1	Date 02-Feb-2004
Z:\Schematics\Altex Schematics\Protel-DXP\AUV00200-ALTEX-SystemBlockDiagram.SCHDOC		

MBARI 1-831-775-1700