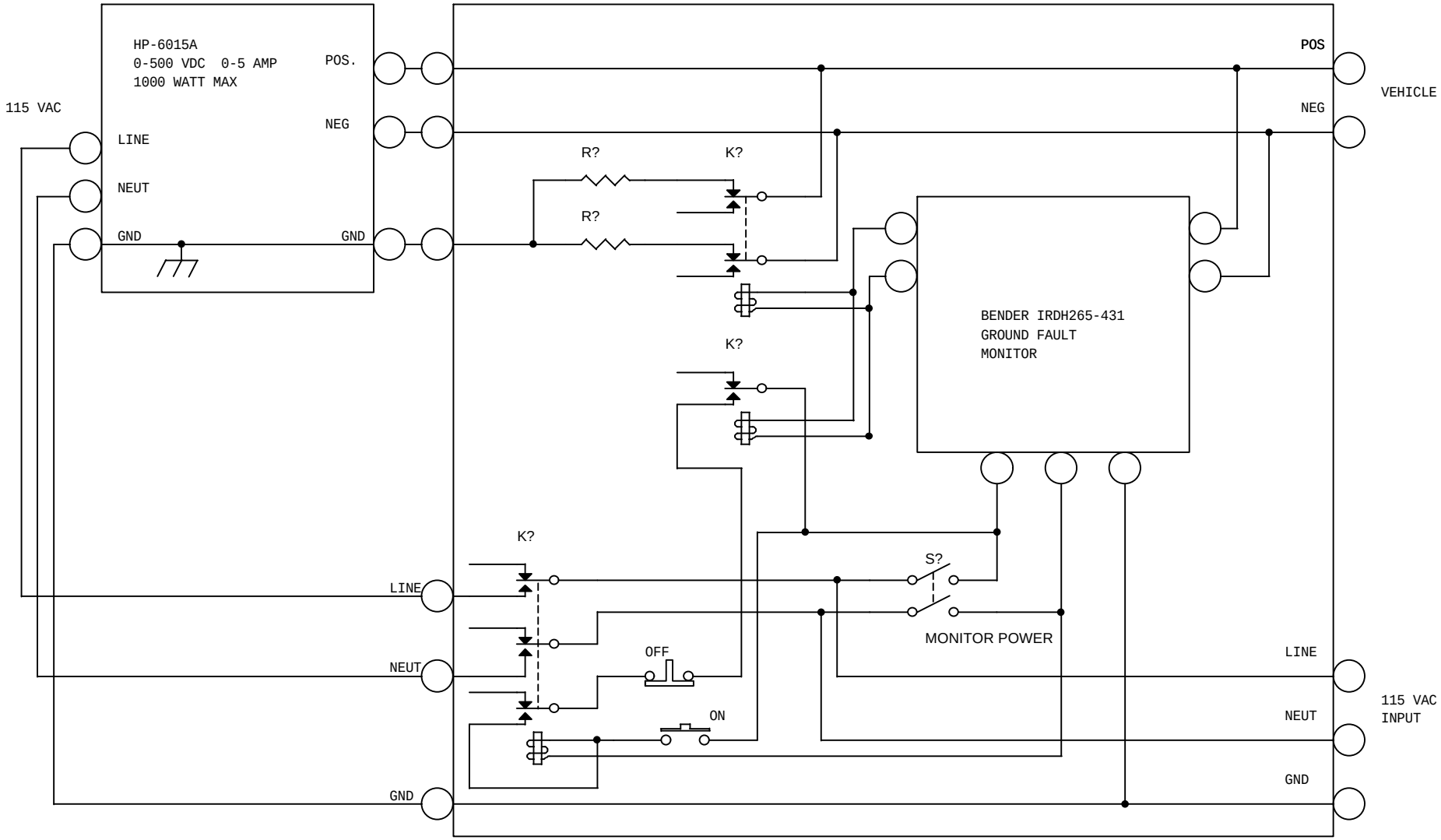

MONTEREY BAY AQUARIUM RESEARCH INSTITUTE
PO Box 628
7700 SANDHOLDT ROAD
MOSS LANDING, CA 95039

Title	**Test Tank Ground Fault Protection**		Number	**{Doc}**
Size **A**	Engineer **G. Thurmond**	Layout **-**	Filename **ttankgfd2.dsn**	Rev **2.0**
	Date: Sunday, March 14, 1999		Sheet 1 of 1	