
BRANTNER
AND ASSOCIATES INC
ESP-WELLHEAD FEED-THROUGH SYSTEMS
SEACON®
SUB SEA ELECTRO-OPTIC CONNECTORS
SEACON
Rubber Molded In-Line Connectors and Mateable Bulkheads
ALL WET / WET CON™
UNDERWATER-MATEABLE ELECTRICAL CONNECTORS
1997
SEACON
MICROMINICON™
U.S. & FOREIGN PATENTS PENDING
SEACON®
CM2000™ SERIES
LOCKHEED MARTIN

SEA CON®

UNDERWATER ELECTRICAL CONNECTORS / CABLE SYSTEMS

TABLE OF CONTENTS

SECTION	Page
INTRODUCTION Company History Products And Services	1-1
GENERAL INFORMATION Sales Office Terms And Conditions Of Sale Domestic Sales Representatives Foreign Sales Representatives	5-1
ALL WET™ SERIES (UNDERWATER MATEABLE)	10-1
WET CON™ SERIES (UNDERWATER MATEABLE)	15-1
FIBER OPTIC SERIES	20-1
GLASS SEALED PRODUCTS	25-1
MINI-CON™ SERIES	30-1
MicroMinicon™ SERIES	35-1
OIL FIELD CONNECTOR SERIES	40-1
GLASS REINFORCED EPOXY SERIES	45-1
RUBBER MOLDED SERIES AND BULKHEAD CONNECTOR MATES	50-1
RUBBER MOLDED, METAL SHELL U-Mate (UNDERWATER MATEABLE) 55 Series	55-1
METAL SHELL SERIES (MSS)	60-1
FLUID-FILLED UNDERWATER MATEABLE CM2000™ Electrical Connector CM HydraStar™ Hybrid Connector	61-1
PENETRATORS	65-1
PRESSURE BALANCED OIL FILLED	70-1
MILITARY SPECIFICATIONS CONNECTORS	71-1
SPECIALTY PRODUCTS SEM SERIES Light Connectors AUV/UUL Towed Array Connectors	75-1
ELECTRICAL CABLES / TERMINATIONS	A-1
ELECTRICAL CONTACT AND WIRE ROPE INFORMATION	B-1
MAX CABLE DIAMETERS	C-1
GLOSSARY	D-1
INDEX	E-1

INTRODUCTION
COMPANY HISTORY

SEA CON® is a manufacturing company that specializes in underwater electrical connectors and cable assemblies. We have production facilities located in California (Corporate Office), Mexico, Rhode Island, and United Kingdom.

The company was founded in 1964 by William Brantner, and is now run by Patrick Simar (President) who joined the organization during 1969.

Our headquarters is located in El Cajon (20 miles east of San Diego), California USA and has over 150 employees. Research and development engineering, manufacturing, quality assurance, and sales take place in this facility. The corporate office is the coordinating sales facility for all customers worldwide.

SEA CON®/EUROPE, LTD. (formerly Sea Connections Systems Ltd.) was established during April 1987. The facility is based in Great Yarmouth, United Kingdom. SEA CON®/EUROPE, LTD. specializes in the manufacturing of the WET-CON™ range of connectors and the U-Mate Series. SEA CON®/EUROPE, LTD. also supplies the complete range of SEA CON® connectors to many countries within Europe.

Phoenix Industries of Rhode Island was acquired by SEA CON® during April 1993 in order to offer customers a wider selection of products. SEA CON®/Phoenix, Inc. manufactures a vast number of glass sealed products which includes battery seals used in aerospace, ocean and land applications, glass sealed hull fittings for submarines and glass sealed underwater electrical connectors for hazardous environments. SEA CON®/Phoenix, Inc. also specializes in custom molded assemblies for both commercial and military applications.

After 30 years of working with customers to meet specific requirements, SEA CON® is able to offer over 1,000 different product styles and is committed to providing connectors that best suit a market defined by continually evolving needs. Our corporate philosophy emphasizes flexibility, responsiveness, staying ahead of market requirements, and quality assurance. The basis of this philosophy is our ongoing commitment to *Customer Satisfaction.*

PRODUCTS & SERVICES

SEA CON® products and services, include but are not limited to the following:

CONNECTORS

- ALL WET™
- WET CON™
- Fiber Optic
- Glass Sealed
- MINI-CON™
- MicroMinicon™
- Oil Field Connectors
- Glass Reinforced Epoxy
- Rubber Molded
- U-MATE™
- Metal Shell
- CM2000™
- CM Hydrastar™
- Penetrators
- Pressure Balanced Oil-Filled
- MIL-SPEC
- Specialty Products
- Electrical Cables

SERVICES

- Cable Terminations
- Cable Assemblies
- Custom Product Design
- Armor Terminations

COPYRIGHT INFORMATION

Copyright © 2000 SEA CON® / Brantner & Associates, Inc.
ALL RIGHTS RESERVED

The information contained in the pages of this catalog remain the property of
SEA CON® / Brantner & Associates, Inc.

All trademarks mentioned are trademarks or registered trademarks of their respective owners.

SEA CON®

UNDERWATER ELECTRICAL CONNECTORS / CABLE SYSTEMS

2000 PRODUCT GUIDE

SEA CON®/BRANTNER & ASSOCIATES, INC.
1240 Vernon Way
El Cajon, CA 92020-1874 USA
TEL 619.562.7071
FAX 619.562.9706
E-Mail: seacon@seaconbrantner.com
Website: http://www.seaconbrantner.com

U.S. GULF AREA SALES OFFICE
2825 Wilcrest Drive, Suite 656
Houston, TX 77042 USA
TEL 713.974.4910
FAX 713.974.4276
Contact: Glenn Pollock, Sales Manager

EAST COAST SALES OFFICE
52 Airport Road - P.O. Box 2236
Westerly, RI 02891-1854 USA
TEL 401.596.6658
FAX 401.596.8597
E-Mail: pcseacon@seaconbrantner.com
Contacts: Paula Christina, Sales Manager

SEA CON®/PHOENIX, INC.
Subsidiary of SEA CON®/Brantner & Associates, Inc.
52 Airport Road - P.O. Box 2236
Westerly, RI 02891-1854 USA
TEL 401.596.6658
FAX 401.596.8597
E-Mail: pcseacon@seaconbrantner.com
Contacts: Frank Ravenelle, Managing Director
Philip Doringer, Sales/Marketing Manager

SEA CON®/EUROPE, LTD.
Subsidiary of SEA CON®/BRANTNER & ASSOCIATES, INC.
Unit 8, Bessemer Way
Harfreys Industrial Estate
Great Yarmouth, Norfolk NR31 OLX England
TEL +44 (0) 1493.652733
FAX +44 (0) 1493.652840
E-Mail: Sales - chris@seaconeurope.com.
Marketing - melanie@seaconeurope.com
Engineering - daveh@seaconeurope.com
Website: http://www.seaconeurope.com
Contact: Chris Knight, Sales Director

ORDERING INFORMATION

In order to serve our customers in the most effective way possible, SEA CON® has developed an easy-to-use key code. Throughout the catalog you will notice a letter (A, B, C) or a combination of letters in the lower right corner of the page. These letters represent the SEA CON® office location(s) which specialize in the product appearing on that page. For example, **AC** indicates that SEA CON®/Brantner & Associates, Inc. or SEA CON®/EUROPE, LTD. may be contacted.

The key code is represented below, and the associated information above:

PRODUCT INFORMATION	
A	**SEA CON®/BRANTNER & ASSOCIATES, INC.**
B	**SEA CON®/PHOENIX, INC.**
C	**SEA CON®/EUROPE, LTD.**

For a complete listing of representatives please see pages 5-6 through 5-8.

GENERAL INFORMATION

TERMS AND CONDITIONS

Provisions listed below apply to the sale of products or service performed by SEA CON®/BRANTNER & ASSOCIATES, INC. and/or its subsidiaries, SEA CON®/PHOENIX and SEA CON®/EUROPE, LTD. hereinafter referred to as, "vendor".

BINDING PURCHASE ORDER

A. *Acceptance of customer orders must be confirmed in writing by vendor, to be binding.*

B. *No terms or conditions, other than those stated herein, and no agreement or understanding, oral or written, in any way purporting to modify or negate these terms and conditions, whether contained in customer's purchase or shipping forms or elsewhere, shall be binding on vendor unless made in writing and signed by an officer of vendor.*

SHIPPING AND DELIVERIES

A. *Unless otherwise agreed in writing, all products are shipped F.O.B. vendor.*

B. *In the absence of specific routing instructions from customers, vendor shall have the right to select the date of shipment, type of carrier, and routing of shipment on behalf of the customers. Vendor will make all efforts to promptly ship products.*

C. *Unless otherwise agreed in writing, vendor shall have the option of partial or complete shipment of orders.*

D. ***Customer shall give written notice to vendor of any claim for apparent defect, shortage, error in shipment, or error in charges within 30 days after receipt of products or such claims shall be deemed waived.***

E. *Vendor shall not be held responsible for any failure to make delivery of all or any part of products or nonperformance of services, ordered by customer attributable to governmental action; strike; or other labor dispute; riots; storm; flood; epidemic; fire damage to or destruction in whole or in part of products; lack of inability to obtain raw materials, labor, fuel or supplies; or any act of God or other cause, contingency or circumstances within or without the United States not subject to vendor control which prevents or hinders manufacture or delivery of products or performance of the services.*

PAYMENT

A. *Customer agrees to pay vendor for products ordered in accordance with prices quoted in writing to customer, or if not so agreed those in effect at the time of delivery.*

B. *Terms of payment are Net 30 days following invoice date.*

C. *Any amount unpaid at the end of 30 days from the date of invoice shall bear interest at the rate of 12% annum, and additional charges as allowed by law shall be allowed for legal fees if collected by an attorney. Payment shall be made in legal tender of the United States (except SEA CON®/EUROPE,LTD. which shall be made in legal tender of the United Kingdom,£).*

D. Payment shall be made to vendor: Appropriate addresses shown on page 5-1 of this product guide.

E. Orders for standard products cancelled prior to completion and delivery shall be subject to a 20% restocking charge. Customer shall pay vendor all costs incurred of an order for specially designed products is cancelled prior to final completion and shipment.

LIMITED WARRANTY

EXPRESS WARRANTY

Products of vendor are warranted to the original purchaser for a period of six (6) months from the date of shipment from the factory to conform to the specifications contained in vendor's product guide and to be free from mechanical, electrical, and physical defects in material and workmanship if the products have been properly installed, operated, used, and serviced under normal and reasonable conditions and in accordance with vendor's instructions.

EXPRESS WARRANTY REMEDY

Vendor will, at its sole discretion, repair or replace, or refund to the original purchaser the purchase price for, any defective product; provided that:

(1) *Vendor receives prompt written notice of any such defect.*

(2) *The defective product is promptly returned to vendor at the warranty claims address set forth below, postage or freight and insurance (if any) prepaid, proof of date for original purchase, and proof that the defect occurred during the warranty period.*

(3) *Vendor determines to its satisfaction that the claimed defect is not excluded from the coverage of this warranty. Unless purchaser otherwise obtains appropriate insurance, purchaser is solely responsible for damage to the product covered by or related to this warranty.*

EXPRESS WARRANTY LIMITATIONS

This warranty does not apply to defects or damage resulting from:

(1) *Use of improper voltage or current.*

(2) *Failure to follow installation instructions.*

(3) *Use which is abnormal, unreasonable, unauthorized, or otherwise contrary to operating instructions.*

(4) *Unreasonable wear and tear.*

(5) *Unauthorized or improper dissembly, repair or alteration.*

(6) Failure to perform normal and reasonable maintnenance.

(7) Abuse, misuse, negligence, tampering, or accident.

(8) Extreme weather conditions.

EXCLUDED WARRANTIES

Except for the express warranty set forth herein, vendor makes no other warranties or guarantee, express, oral, implied, or statutory, regarding its products, all such warranties (including the implied warranties of merchantability and fitness for a particular purpose) being expressly disclaimed to the extent allowable by law.

LIMITATION OF REMEDIES

Purchaser assumes all risk and liability for results obtained in any installation, operation, or use of the product. Purchaser's sole remedy for any breach of warranty by vendor shall be limited to the "express remedies" set forth above. Otherwise, in no event shall vendor, its agents, or employees be liable to the original purchaser or any third party for any consequential or incidental damages or expenses of any nature arising directly out of or in connection with the use of vendor products, even if vendor has been advised of the possibility of such damages or expenses. In any event, unless otherwise contrary to state law, vendor liability under this limited warranty shall not exceed the purchase price of the product

SEND WARRANTY CLAIMS TO VENDOR AT APPROPRIATE ADDRESS LOCATED ON PAGE 5-1 OF THIS PRODUCT GUIDE.

No product shall be accepted for return, repair, or replacement without the written authorization of vendor.

Freight and handling charges on returns shall be at customer's expense and will be reimbursed of vendor determines that the product is defective.

SPECIFICATIONS

All cable diameters and connector to cable molded lengths are approximate and subject to change without notice.

IMPORTANT NOTICE

The product information published in our catalogs and literature is not guaranteed. Although it is compiled carefully and accurate for most purposes, because of our commitment to quality products; modifications may be necessary. Changes are normally made to improve the performance for which the product is intended.

Note:All pressure ratings in this catalog refer to mated conditions of the connectors. If 'open face' pressure resistance is desired, it must be so specified on the purchase order and will be priced accordingly.

DOMESTIC SALES REPRESENTATIVES

FLORIDA
Panama City only
Q ASSOCIATES
P.O. Box 1129
Panama City, FL 32402 USA
Tel: 850.763.1557 FAX: 850.234.6040

GULF AREA
Louisiana, Mississippi, Oklahoma, Texas
OCEANTEC
1109 Pecan Street
Bastrop, TX 78602
Tel: 800.733.0221 Fax: 512.332.0609

PACIFIC NORTHWEST
Alaska, B.C., N. California (limited accounts), Oregon, Washington
MECCO
P.O. Box 790
Duvall, WA 98019 USA
Tel: 425.788.4522 Fax: 425.788.0639

SOUTHERN U.S.
BMW
Route 3 - Box 725
Dickinson, TX 77539 USA
Tel: 281.339.1037 Fax: 281.339.3049

FOR REPRESENTATION IN YOUR AREA, IF UNLISTED, PLEASE CONTACT THE CORPORATE OFFICE:

SEA CON®
1240 Vernon Way
El Cajon, CA 92020-1874 USA
TEL: 619.562.7071 FAX: 619.562.9706

FORIEGN SALES REPRESENTATIVES

AUSTRALIA
UNDERWATER VIDEO SYSTEMS - BORONIA
P.O. Box 129
9 Macquarie Place
Boronia, Victoria 3155 Australia
Tel: ++.61.39729.8622 Fax: ++.61.39720.4948

UNDERWATER VIDEO SYSTEMS - PERTH
P.O. Box 1337, Bibra Lake
Unit 2, 14 Port Kembla Drive
Bibra Lake, W.A., 6163 Australia
Tel: ++.61.89.434.2544 Fax: ++.61.89.434.1463

BELGUIM
TEKNA
43 Pl. Jamblinne De Meux
1040 Brussels, Belguim
Tel: ++.32.2733.1480 Fax: ++.32.2465.0746

BRAZIL
DEMO Offshore LTDA
Av. Marechal Camara 160, Sala 316
Castelo
20020-080 Rio de Janeiro, Brazil
Tel: ++.55.21.533.0526 Fax: ++.55.21.533.0526
E-Mail: fportella@unikey.com.br

CANADA
Saskatchewan, Manitoba, Ontario, Quebec, New Brunswick, Nova Scotia, Prince Edward Island, New Foundland/Labrador, N.W. Territories
EGETEC ENTERPRISES, INC.
502-6 Bayfield Street
Barrie, Ontario
Canada L4M 3A4
Tel: 705.734.1090 Fax: 705.734.1083

ENGLAND, FRANCE, SCOTLAND, WALES & IRELAND
Subsidiary of SEA CON®/Brantner & Associates, Inc.
SEA CONNECTIONS SYSTEMS LTD.
Unit 8 Bessemer Way
Harfreys Industrial Estate
Great Yarmouth, Norfolk NR31 OLX United Kingdom
Tel: ++.441.493.652.733 Fax: ++.441.493.652.840
E-Mail: melanie@seaconsytems.co.uk
Website: http://www.seaconsystems.co.uk

GERMANY
HQ PRODUCTS
Johann-Weger-Strasse 9
D-84149 Velden/Vils, Germany
Tel: ++.49.8742.1688 Fax: ++.49.8742.2458

ITALY
TELESUB LANTERNA S.N.C.
Localita Vincinella
19035 Ponzana Magra (SP), Italy
Tel: ++.39.187.631350 Fax: ++.39.187.630400

JAPAN
SHOSHIN CORPORATION
Nissho Bldg., P.O. Box 173
Tokyo, Japan 103-91
Tel: ++.81.3270.5921 Fax: ++.81.3245.1695
E-Mail: hshirani@shoshin.co.jp

SHOSHIN OSAKA
C.P.O. Box 541
Osaka, Japan
Tel: ++.81.6946.7751 Fax: ++.81.6946.7760
E-Mail: fujiwara@osk.shoshin.co.jp

SHOSHIN U.S.A., INC.
1700 E. Garry Avenue, Suite 115
Santa Ana, CA 92705
Tel: 714.250.4073 Fax: 714.250.9574
E-Mail: tfukui@shoshin.com

NEW ZEALAND
ASIANZ HOLDINGS, LTD.
P.O.Box 10-672
Wellington, New Zealand
Tel: ++.64.4472.3288 Fax: ++.64.4472.3348
E-Mail: mick.dillon@asianz.co.nz
pascal@asianz.co.nz

FOREIGN SALES REPRESENTATIVES

NORWAY & SWEDEN
BENNEX TRANSMARK NORGE AS
P.O. Box 1992, Nordnes
N-5024 Bergen, Norway
Tel: ++.47.5530.9800 Fax: ++.47.5590.2212
E-Mail: bennex@sn.no
Website: http://www.schilling.com/agents/Bennex-Transmark/

PORTUGAL
COMARTEC
Rue Ferreira Lapa, 32, 5D
1150 Lisboa, Portugal
Tel: ++.35.11315.0441 Fax: ++.35.11352.2052

SINGAPORE
SEA AND LAND TECHNOLOGIES
01-290 Block 20209
Bukit Batok Industrial Park A
Singapore 659534
Tel: ++.655.612622 Fax: ++.655.630366

SOUTH KOREA
TETRADYNE INC.
3525 Breakwater Avenue
Hayward, CA 94545
Tel: 213.980.9200 Fax: 213.980.0708

THE NETHERLANDS
VAN ESSEN INSTRUMENTS BV
P.O. Box 553
2600 AN Delft
Holland, The Netherlands
Tel: ++.31.1526.25625 Fax: ++.31.15256.5175
E-Mail: vanessen@vanessen.com

ALL WET™ Round Series

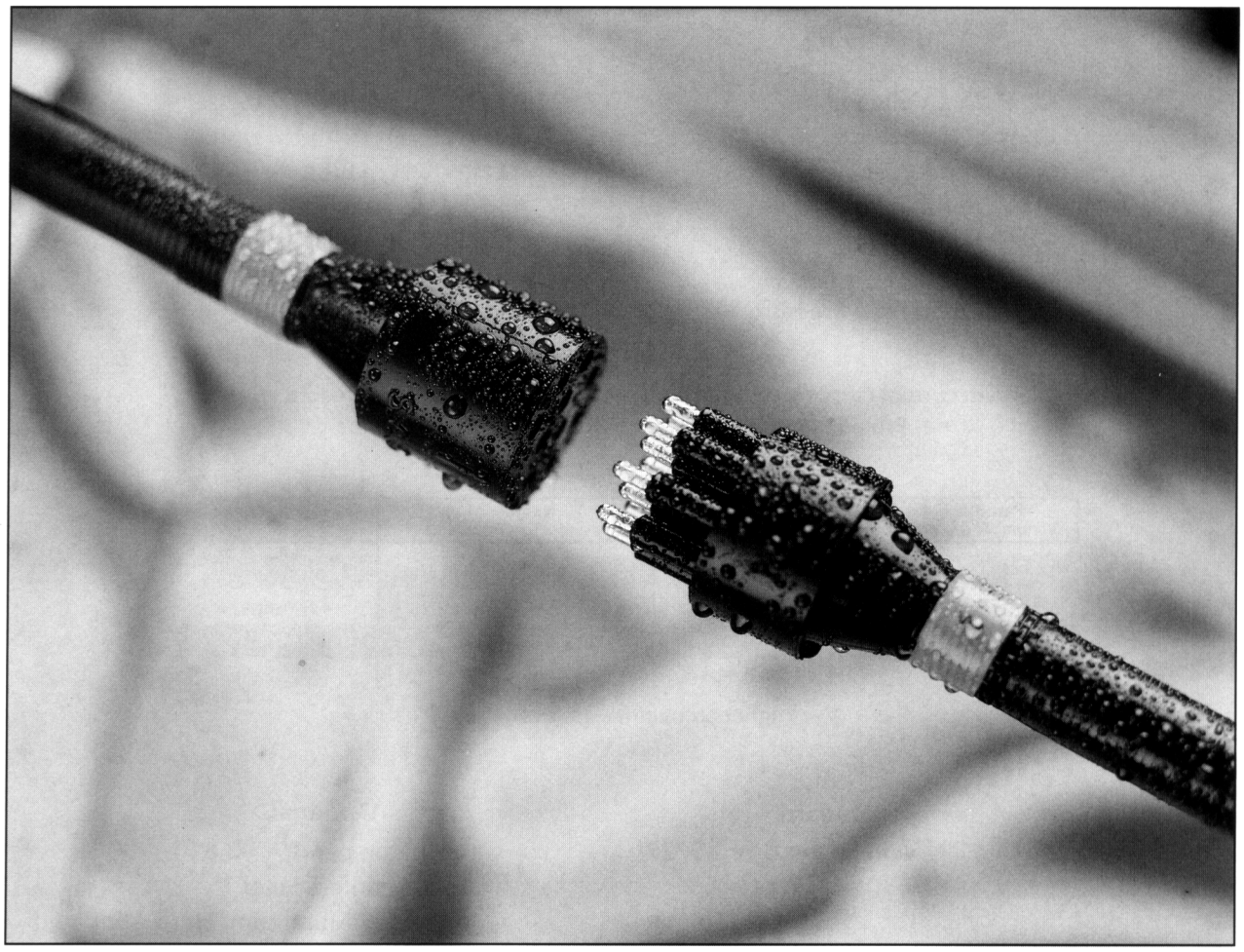

ALL WET™ Round Series specifications

Current Carrying Capacity	19 amps per contact *
Operating Voltage	600 VDC
Contact Resistance	< 0.01 OHM
Insulation Resistance	> 500 MΩ after wet mating
Pressure Ratings	
Mated Condition	In-line: 20,000 psi (46,000 ft)
	Bulkheads 10,000 psi (23,000 ft)
Open Face Pressure	Bulkhead 1,000 psi (2,300 ft)
Mating Cycles	> 500 wet matings * *

* Maximum current carrying capacity for contacts may be affected by cable selection.
* * Provided proper handling procedures are adhered to.

Ampacity Chart for Standard Parts

Part description number of contacts	Ampacity	Number of conductors / contacts	Ampacity
AWL - 2	7 Amps	AWM - 6	5.6 Amps
AWL - 3	7 Amps	AWM - 8	4.9 Amps
AWL - 4	5.6 Amps	AWO - 12	3.5 Amps
AWL - 5	5.6 Amps		

Higher ampacities are available

materials

	Standard	Optional
Connector Body	Neoprene per B/A X5727	Hypalon per B/A X6830
Bulkhead Shell	CA630 per QQ-C-465	316 Stainless Steel
		6061-T6 Aluminum, Hard Anodized
		Glass Reinforced Epoxy (GRE)
Contacts	Copper Alloy	
	Gold Plated per MIL-G-45204	
Guide Pins	304 Stainless Steel	
O-Rings	Buna N, 70 Durometer	
In-Line Cable * * *	# 18 AWG SO *	# 14 or # 16 AWG SO
Bulkhead Pigtails	Teflon Type E hook-up wire *	
Locking Sleeves * *	Not standard, must be ordered	Delrin or Stainless Steel
Bulkhead Nut / Washer	Not standard, must be ordered	Brass or Stainless Steel

* 18 in. standard length
* * Locking Sleeves shown on page 10-10.
* * * Cable other than 'SO' will be terminated and over-molded to a bulkhead connector.

standard wiring color code

CAUTION:

ALL WET™ connectors are intended to mate with ALL WET™ connectors only. Although the ALL WET™ and WET CON™ connectors look similar, the numbering pattern and color codes are not the same.

We recommend, as general practice, to verify color code and pin location before installation.

Standard In-Line Color Code (SO cable)

CONTACT #	COLOR
1	White
2	Black
3	Green
4	Red
5	Orange
6	Blue
7	White / Black
8	Red / Black

CONTACT #	COLOR
9	Green / Black
10	Orange / Black
11	Blue / Black
12	Black / White

ALL WET™ Round Series part numbering system

When ordering, specify as follows:

AW Bulkhead Connectors

example: AWL - 4 P - BC - N/W

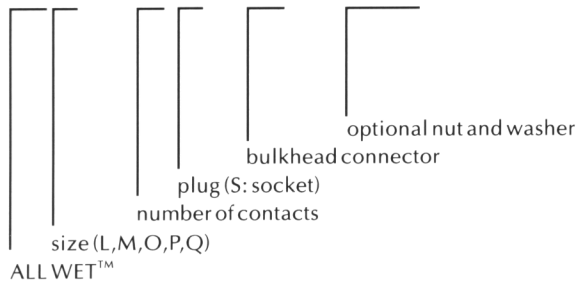

AW In - Line Connectors

example: AWL - 4 - MP

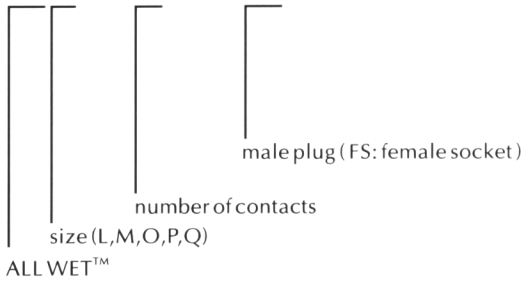

Locking Sleeves

Locking sleeves are available for round ALL WET™ connectors as an option, see page 10-10.

example: AWL - MLS - D

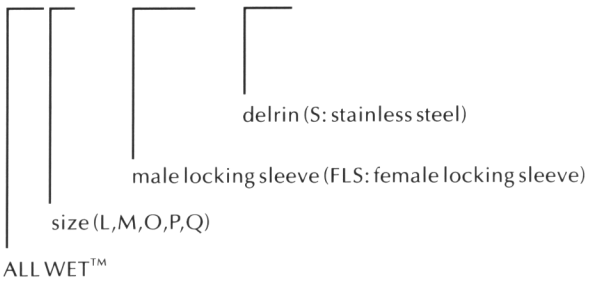

Dummy Connectors

Dummy connectors are available for all connectors in the ALL WET™ series.
To order, add the suffix-D after the part number.

example: AWL - 4 - FS - D

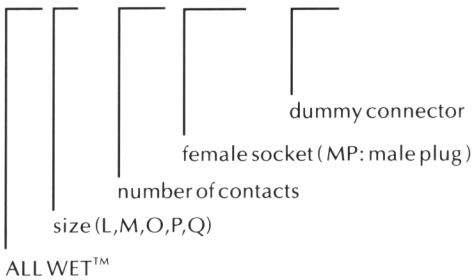

SEA CON A

ALL WET™ Round Series bulkhead connectors

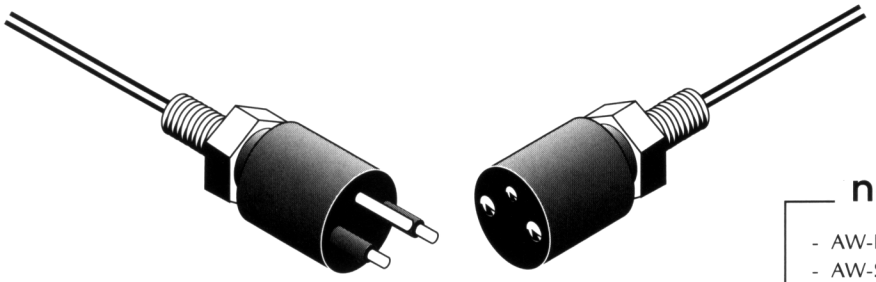

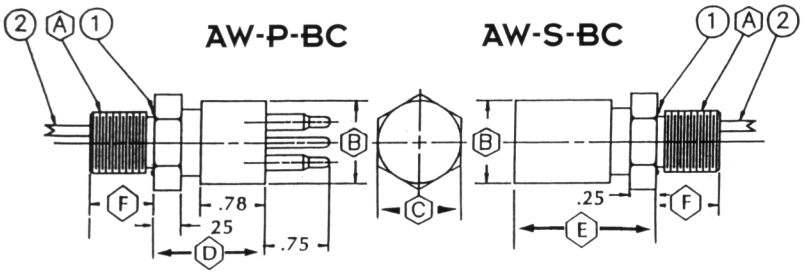

notes

- AW-P-BC mates with AW-FS.
- AW-S-BC mates with AW-MP.
- Optional thread sizes: AWL- 7/16-20 UNF-2A.
  AWM/AWO-5/8-18 UNF-2A.
- For GRE bulkhead mounting torques please contact factory. *
- Bulkhead Locking Sleeve: Optional; Factory installation only for AWL/M/O-BC (see page 10-10).
- Nut and washer: Optional.
- Dummy Connector: Optional.
- Dummy Shorting Plug Connector: Optional
- Do not dry mate connectors.
- Torque values referenced in this literature assume installation into dry metal threads. For other applications, please contact the factory for recommendations. *

Part No.	(A) Thread	(B) Inches	(C) Hex Flats Inches	(1) O-Ring	(2) Hook-Up Wire	* Bulkhead Mounting Torque inch pounds	(D)	(E)	(F) Thread Length
AWL-P/S-BC	1/2-20 UNF-2A	1.00	1.00	2-114	18 AWG	50	1.29	1.67	.75
AWM-P/S-BC	3/4-16 UNF-2A	1.25	1.25	2-118	18 AWG	85	1.29	1.67	.75
AWO-P/S-BC	1-14 UNS-2A	1.60	1.62	2-122	18 AWG	125	1.29	1.67	.75

contact configurations - face view

AWL-2P-BC

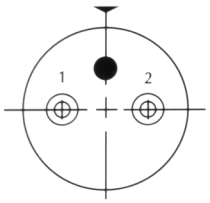

AWL-2S-BC

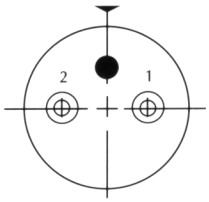

AWL-3P-BC

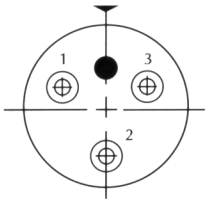

AWL-3S-BC

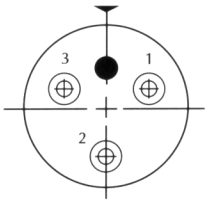

AWL-4P-BC

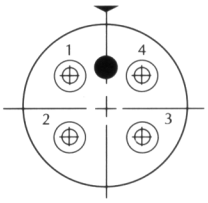

AWL-4S-BC

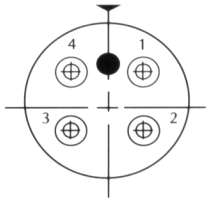

AWL-5P-BC

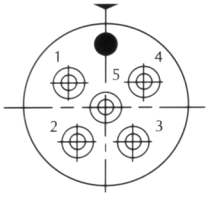

AWL-5S-BC

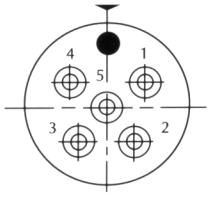

AWM-6P-BC

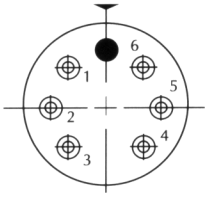

AWM-6S-BC

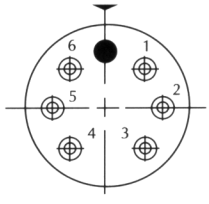

* AWM-8P-BC

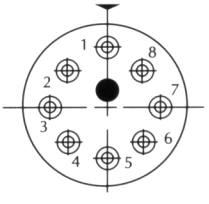

* AWM-8S-BC

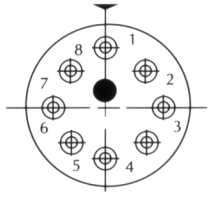

* AWM-8XP-BC

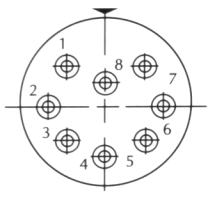

* AWM-8XS-BC

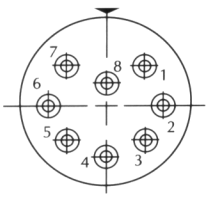

AWO-12P-BC

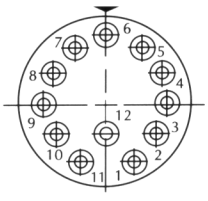

AWO-12S-BC

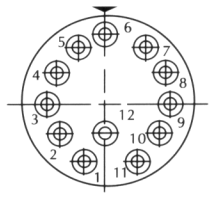

*AWM-8X pattern is recommended for new applications.

SEACON® A

ALL WET™ Round Series
in-line connectors

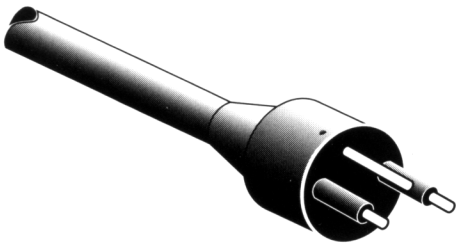

AW-MP

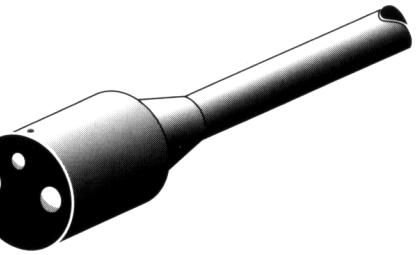

AW-FS

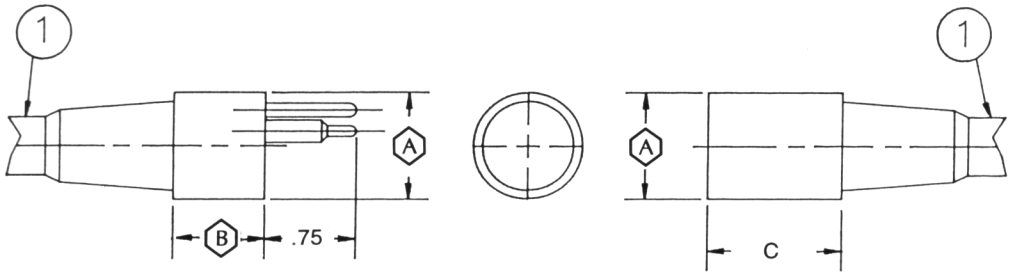

Part No.	(A) Inches	(B) Inches	(C) Inches	(1) Cable
AWL-MP/ FS	1.00	.78	1.16	18 AWG SO
AWM-MP/ FS	1.25	.78	1.16	18 AWG SO
AWO-MP/FS	1.60	.78	1.16	18 AWG SO

notes

- AW-MP mates with AW-FS and AW-S-BC.
- AW-FS mates with AW-MP and AW-P-BC.
- Locking Sleeve: Optional (see page 10-10).
- Dummy Connector: Optional
- Dummy Shorting Plug Connector: Optional.
- Do not dry mate connectors.

contact configurations - face view

AWL-2-MP

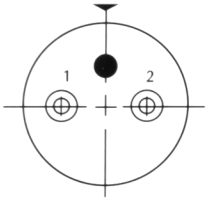

AWL-2-FS

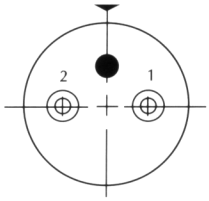

AWL-3-MP

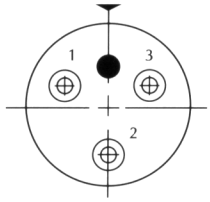

AWL-3-FS

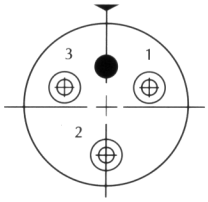

AWL-4-MP

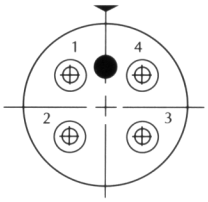

AWL-4-FS

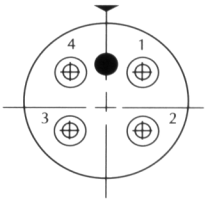

AWL-5-MP

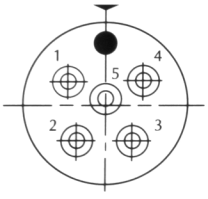

AWL-5-FS

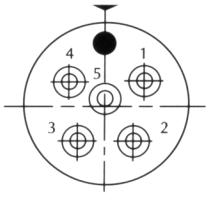

AWM-6-MP

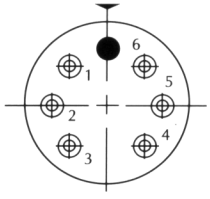

AWM-6-FS

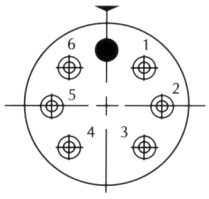

* AWM-8-MP

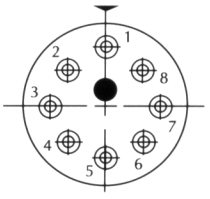

* AWM-8-FS

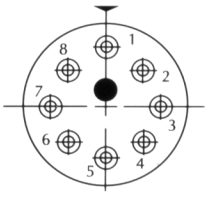

* AWM-8X-MP

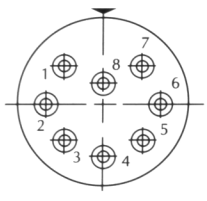

* AWM-8X-FS

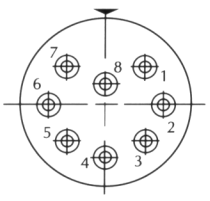

AWO-12-MP

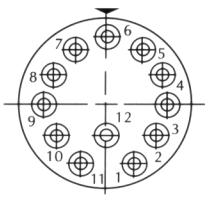

AWO-12-FS

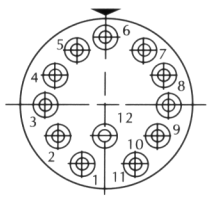

* AWM-8X pattern is recommended for new applications.

SEA CON® A

ALL WET™ Round Series with Ground (w/G) in-line connectors

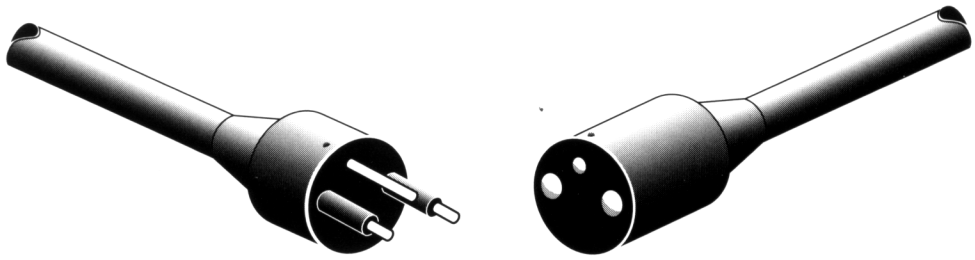

AW-MP w/G

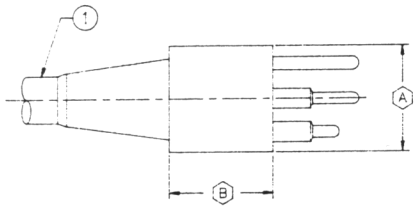

AW-FS w/G

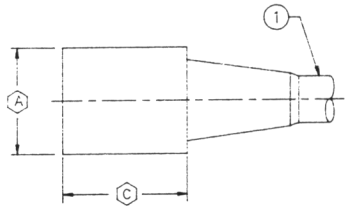

Part No.	A Inches	B Inches	C Inches	1 Cable
AWL-MP/ FS	1.00	.78	1.16	18 AWG SO
AWM-MP/ FS	1.25	.78	1.16	18 AWG SO
AWO-MP/FS	1.60	.78	1.16	18 AWG SO

notes

- AW-MP mates with AW-FS and AW-S-BC.
- AW-FS mates with AW-MP and AW-P-BC.
- Locking Sleeve: Optional (see page 10-10).
- Dummy Connector: Optional.
- Dummy Shorting Plug Connector: Optional.
- Do not dry mate connectors.
- For Bulkhead Connectors, please contact the factory for availability.

contact configurations - face view

AWL-2w/G-MP

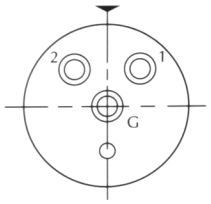

AWL-2w/G-FS

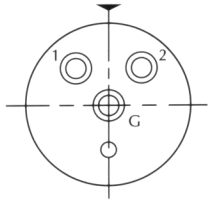

AWL-3w/G-MP

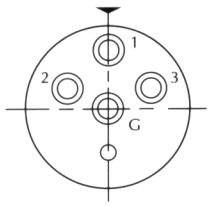

AWL-3w/G-FS

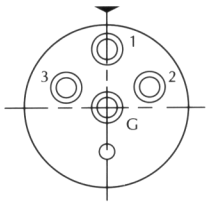

AWM-3w/G-MP

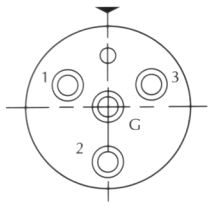

AWM-3w/G-FS

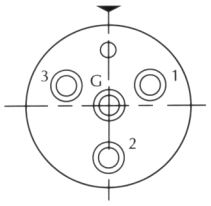

AWM-5w/G-MP

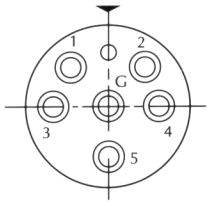

AWM-5w/G-FS

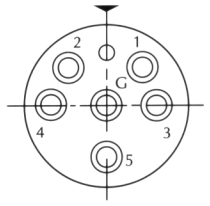

AWO-15w/G-MP

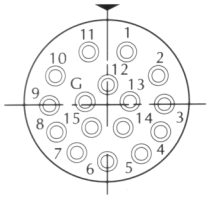

AWO-15w/G-FS

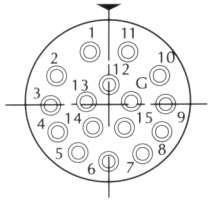

Standard In-Line w/ Ground Color Code

AWL-2w/G-MP/FS	
CONTACT #	COLOR
1	White
2	Black
G	Green

AWL-3w/G-MP/FS AWM-3w/G-MP/FS	
CONTACT #	COLOR
1	White
2	Black
3	Red
G	Green

AWM-5w/G-MP/FS	
CONTACT #	COLOR
1	White
2	Black
3	Red
4	Orange
5	Blue
G	Green

AWO-15w/G-MP/FS	
CONTACT #	COLOR
1	White
2	Black
3	Red
4	Orange
5	Blue
6	White/Black
7	Red/Black
8	Green/Black
9	Orange/Black
10	Blue/Black
11	Black/White
12	Green/White
13	Red/White
14	Blue/White
15	Black/Red
G	Green

SEA CON® A

ALL WET™ Split Series
specifications

Current Carrying Capacity	13 amps per contact *
Operating Voltage	600 VDC (except as noted)
Contact Resistance	< 0.01 OHM
Insulation Resistance	> 500 MΩ after wet mating
Pressure Ratings	
Mated Condition	10,000 psi (23,000 ft)
Open Face Pressure	1,000 psi (2,300 ft)
Mating Cycles	> 500 wet matings **

* Maximum current carrying capacity for contacts may be affected by cable selection.
**Provided proper handling procedures are adhered to.

Ampacity Chart for Standard Parts

Part description number of contacts	Ampacity
AWQ 2/8	7 Amps
AWQ 6/12	5.6 Amps
AWQ 2/24	7 Amps

Part description number of contacts	Ampacity
AWQ 4/24	5.6 Amps
AWQ 8/24	4.9 Amps
AWQ 12/24	3.5 Amps

Part description number of contacts	Ampacity
AWQ 8/32	4.9 Amps
AWQ 6/36	5.6 Amps
AWQ 7/42	4.9 Amps

materials

	Standard	Optional
Connector Body	Neoprene per B/A X5727	Hypalon per B/A X6830
Bulkhead Shell	CA630 per QQ-C-465	316 Stainless Steel
		6061-T6 Aluminum, Hard Anodized
		Glass Reinforced Epoxy
Contacts	Copper Alloy Gold Plated per MIL-G-45204	
Guide Pins	304 Stainless Steel	
O-Rings	Buna N, 70 Durometer	
Locking Sleeves *	Not standard, must be ordered	Delrin or Stainless Steel
Bulkhead Nut / Washer	Not standard, must be ordered	Brass or Stainless Steel

* Locking Sleeves shown on page 10-10.

standard wiring color code

Standard In-Line Color Code (SO cable)

CONTACT #	COLOR
1	White
2	Black
3	Green
4	Red
5	Orange
6	Blue
7	White / Black
8	Red / Black

CONTACT #	COLOR
9	Green / Black
10	Orange / Black
11	Blue / Black
12	Black / White

ALL WET™ Split Series part numbering system

When ordering, specify as follows:

AW Bulkhead Connector

example: AWQ - 4 / 24 - S - BC

- AWQ — ALL WET™
- size (L,M,Q)
- 4 — number of contacts per sector
- 24 — total no. of contacts
- S — socket
- BC — bulkhead connector

AW In - Line Connector

example: AWQ - 4 / 24 - MP

- AWQ — ALL WET™
- size (L,M,Q)
- 4 — number of contacts per sector
- 24 — total no. of contacts
- MP — male plug

Locking Sleeves

Locking sleeves are available for ALL WET™ Split Series connectors as an option, see page 10-10.

example: AWQ - MLS - D

- AWQ — ALL WET™
- size (L,M,Q)
- MLS — male locking sleeve (FLS: female locking sleeve)
- D — delrin (S: stainless steel)

Dummy Connectors

Dummy male plug connectors are available for all bulkhead connectors in the ALL WET™ Split Series. To order, add the suffix-D after the part number.

example: AWQ - 4 / 24 - MP - D

- AWQ — ALL WET™
- size (L,M,Q)
- 4 — no. of contacts per sector
- 24 — total no. of contacts
- MP — male
- D — dummy connector

ALL WET™ Split Series
pie connectors

AW - MP

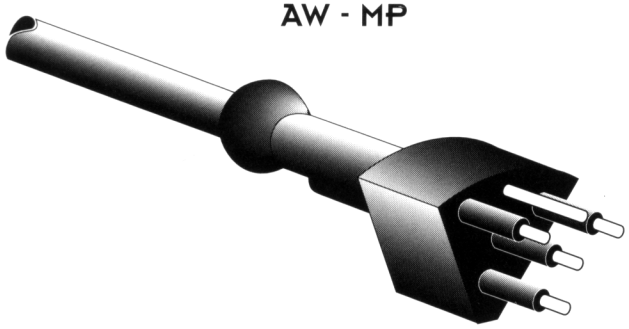

AW - S - BC



AWL-2/4-MP-Split

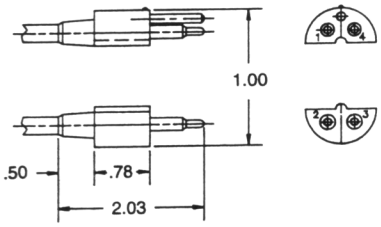

AWQ-MP Split

Split In-Line Connector

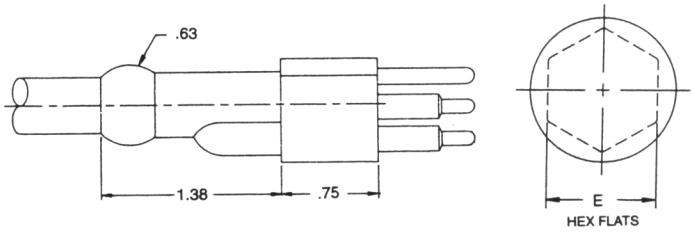

AW-S-BC

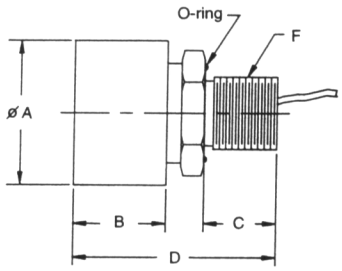

Multiple connectors required to fill all sectors of bulkhead connector.

notes

- Pressure Rating: 10,000 PSI, mated
  1,000 PSI, open face
- Dummy Connector: Optional
- Dummy Shorting Plug Connector: Optional.
- Do not dry mate connectors.
- Locking Sleeves: optional (see page 10-10).

notes

- Nut and washer: optional
- For GRE bulkhead mounting torques please contact factory.*
- Torque values referenced in this literature assume installation into dry metal threads. For other applications, please contact the factory for recommendations.
- Only available with 18 AWG SO/SJO or smaller neoprene jacketed cables.

	AW-S-BC	A	B	C	D	E	F	O-Ring	-BC 18" Teflon Type E Hook-up Wire	-MP w/18" Cable	VDC	AMP per contact	Cable Ampacity	* Bulkhead Mounting Torque: inch pounds
*	AWL-2/4	1.00	1.16	.75	2.42	1.00	1/2-20 UNF-2A	2-114	18 AWG	18/2 SJO	300	19	7.0	50
*	AWM-2/12	1.25	1.16	.75	2.42	1.25	1/2 -20 UNF-2A	2-114	20 AWG	18/2 SJO	300	19	7.0	50
	AWQ-2/8	2.00	1.28	1.00	2.80	1.50	1-14 UNS-2A	2-123	18 AWG	18/2 SO	600	19	7.0	125
	AWQ-6/12	2.00	1.28	1.00	2.80	1.50	1-14 UNS-2A	2-123	18 AWG	18/6 SO	600	10	5.6	125
	AWQ-2/16	2.00	1.28	1.00	2.80	1.50	1-14 UNS-2A	2-123	18 AWG	18/2 SO	600	19	7.0	125
	AWQ-2/24	2.00	1.28	1.00	2.80	1.50	1-14 UNS-2A	2-123	18 AWG	18/2 SJO	300	10	7.0	125
	AWQ-4/24	2.00	1.28	1.00	2.80	1.50	1-14 UNS-2A	2-123	18 AWG	18/4 SO	600	19	5.6	125
	AWQ-8/24	2.00	1.28	1.00	2.80	1.50	1-14 UNS-2A	2-123	18 AWG	18/8 SO	600	10	4.9	125
	AWQ-12/24	2.00	1.28	1.00	2.80	1.50	1-14 UNS-2A	2-123	18 AWG	18/12 SO	600	19	3.5	125
	AWQ-8/32	2.00	1.28	1.00	2.80	1.50	1-14 UNS-2A	2-123	18 AWG	18/8 SO	600	19	4.9	125
	AWQ-6/36	2.00	1.28	1.00	2.80	1.50	1-14 UNS-2A	2-123	20 AWG	18/6 SO	600	10	5.6	125
	AWQ-12/36	2.00	1.28	1.00	2.80	1.50	1-14 UNS-2A	2-123	20 AWG	18/12 SO	600	19	3.5	125
	AWQ-7/42	2.00	1.28	1.00	2.80	1.50	1-14 UNS-2A	2-123	20 AWG	18/7 SO	600	19	4.9	125

* Bulkhead Locking Sleeve: Optional
Factory installation only for AWL/M-BC (see page 10-10).

SEA CON® A

ALL WET™ Split Series
bulkhead connectors - face view

AWL-2/4

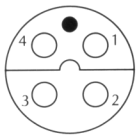

AWM-2/12

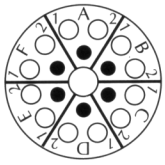

AWQ-2/8

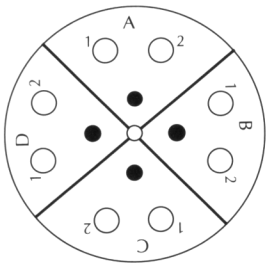

AWQ-6/12

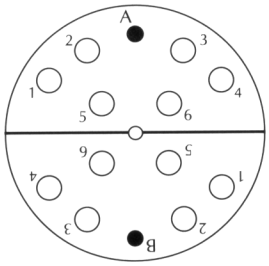

AWQ-2/16

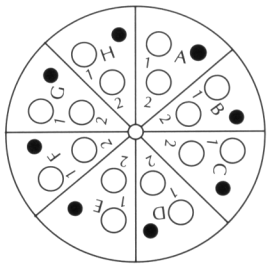

AWQ-2/24

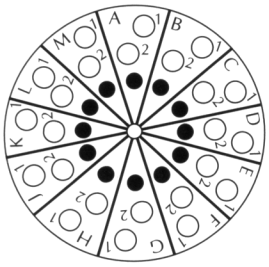

AWQ-4/24

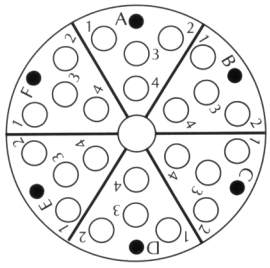

AWQ-8/24

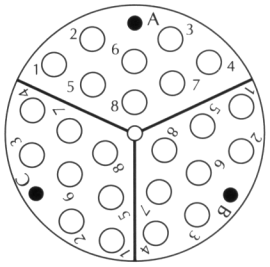

AWQ-12/24

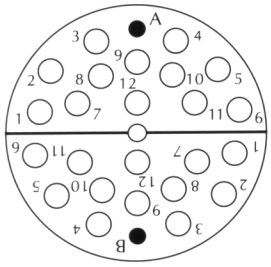

AWQ-8/32

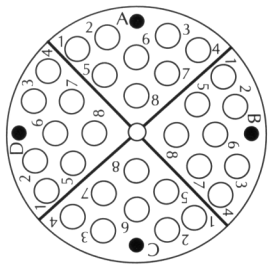

AWQ-6/36

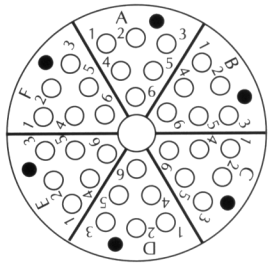

AWQ-12/36

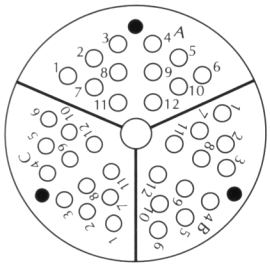

AWQ-7/42

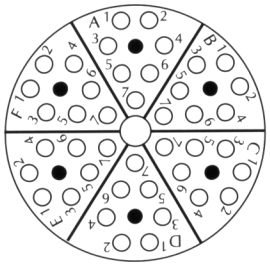

SEA CON® A

ALL WET™
locking sleeves

FLS

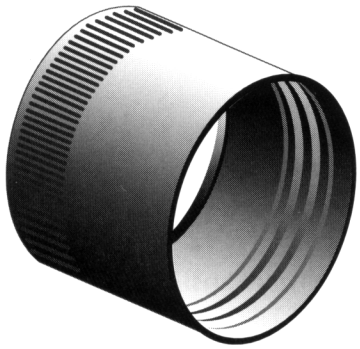

MLS



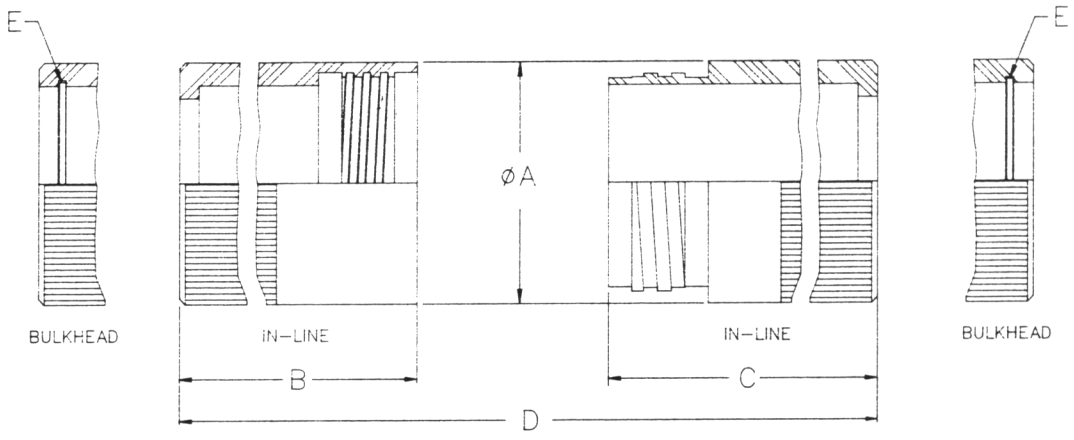

notes

- D - Delrin.
- S - Stainless Steel
- Locking Sleeves will fit standard ALL WET™ Connectors (page 10-3 and 10-4) and ALL WET™ Split Connectors (page 10-8 and 10-9).
- Specify Bulkhead or In-Line type locking sleeve.
- Bulkhead Locking Sleeve: Optional
  Factory installation only for AWL/M/O-BC (see page 10-10).

* No spirolox in this Bulkhead Locking Sleeve.

ALL WET™ Locking Sleeves In-Line		Bulkhead	ØA	B	C	D	E Spirolox
AWL -	FLS	FBLS	1.25	1.23	——	2.10	RR-100
AWL -	MLS	MBLS	1.25	——	1.38		RR-100
AWM -	FLS	FBLS	1.50	1.23	——	2.10	RR-125
AWM -	MLS	MBLS	1.50	——	1.38		RR-125
AWO -	FLS	FBLS	1.85	1.23	——	2.10	RR-162
AWO -	MLS	MBLS	1.85	——	1.38		RR-162
AWQ -	——	FBLS	2.50	1.44	——	2.94	—— *
AWQ -	MLS	——	2.50	——	2.00		——

SEA CON A

ALL WET™ FAW/Flat Series
MAW/Hermaphroditic Series

specifications

Current Carrying Capacity	
FAW	10 amps per contact *
MAW	3 amps per contact *
Operating Voltage	
FAW	600 VDC
MAW	300 VDC
Contact Resistance	< 0.01 OHM
Insulation Resistance	> 500 MΩ after wet mating
Pressure Ratings	
Mated Condition	In-line: 10,000 psi (23,000 ft)
Open Face Pressure	Bulkhead 1,000 psi (2,300 ft)
Mating Cycles	> 500 wet matings **

* Maximum current carrying capacity for contacts may be affected by cable selection.
**Provided proper handling procedures are adhered to.

Ampacity Chart for Standard Parts

Part description number of contacts	Ampacity
FAWL - 2	7 Amps
FAWL - 3	7 Amps
FAWL - 4	5.6 Amps
FAWL- 5	5.6 Amps

Higher ampacities are available

materials

	Standard	Optional
Connector Body	Neoprene per B/A X5727	Hypalon per B/A X6830
Bulkhead Shell	CA630 per QQ-C-465	316 Stainless Steel 6061-T6 Aluminum, Hard Anodized
Contacts	Copper Alloy Gold Plated per MIL-G-45204	
O-Rings	Buna N, 70 Durometer	
In-Line Cable		
FAWL	# 18 AWG SO *	
FAWM	# 22 AWG *	
MAW	IN2 *	
Bulkhead Pigtails	Teflon Type E hook-up wire *	Stainless Steel
Bulkhead Nut / Washer	Brass	

* 18 in. standard length

standard wiring color code

Standard In-Line Color Code (SO cable)

CONTACT #	COLOR
1	White
2	Black
3	Green
4	Red
5	Orange

ALL WET™ FAW/Flat Series
MAW/Hermaphroditic Series
part numbering system

When ordering, specify as follows:

FAW Bulkhead Connector

example: FAWL - 4 P - BC - R/A

- FAWL: Flat ALL WET™
- L: size (L,M)
- 4: number of contacts
- P: pin (S: socket)
- BC: bulkhead connector
- R/A: right angle

FAW In-Line MP Connector

example: FAWL - 4 P - MP

- FAWL: Flat ALL WET™
- L: size (L,M)
- 4: number of contacts
- P: pin (S: socket)
- MP: male plug (FS: female socket)

FAW In-Line FS Connector

example: FAWL - 4 P - FS

- FAWL: Flat ALL WET™
- L: size (L,*)
- 4: number of contacts
- P: pin (S: socket)
- FS: female socket (MP: male plug)

Dummy Connectors

Dummy connectors are available for all connectors in the ALL WET™ Flat Series.
To order, add the suffix-D after the part number.

example: FAWL - 4 P - MP D

- FAWL: Flat ALL WET™
- L: size (L,M)
- 4: number of contacts
- P: pin (S: socket)
- MP: male plug (FS: female socket)
- D: dummy connector

ALL WET™ FAW/Flat Series

FAW-P-BC-R/A / FAW-S-BC-R/A bulkhead connectors

FAW-P-BC-R/A

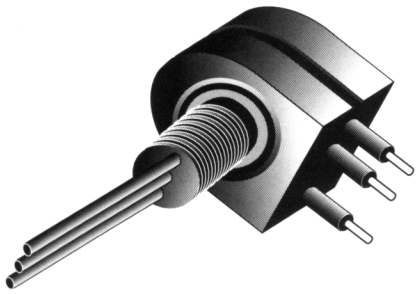

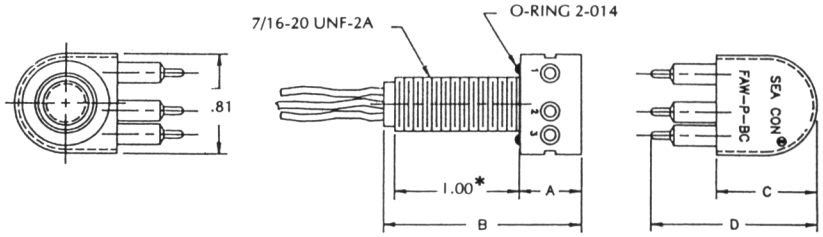

connector	A	B	C	D
FAWL-P-BC-R/A	.50	1.59*	.81	1.34
FAWM-P-BC-R/A	.63	1.70*	.95	1.48

contact configurations - face view

FAWL-2P-BC-R/A

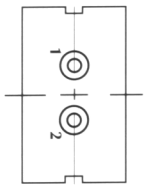

FAWL-3P-BC-R/A

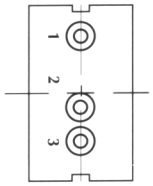

FAWL-4P-BC-R/A

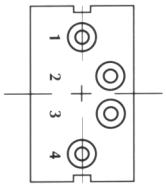

FAWL-5P-BC-R/A

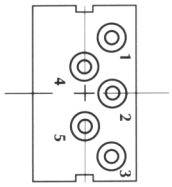

FAWM-8P-BC-R/A

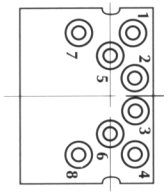

FAWM-10P-BC-R/A

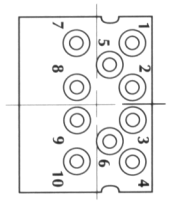

FAW-S-BC-R/A

connector	A	B	C
FAWL-S-BC-R/A	1.05	.50	1.59*
FAWM-S-BC-R/A	1.12	.63	1.70*

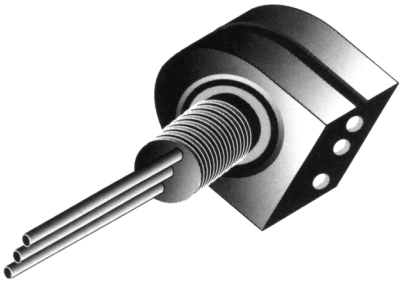

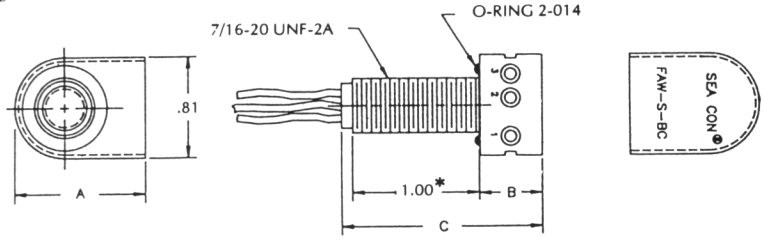

notes

- FAW-P-BC R/A mates with FAW-S-MP.
- FAW-S-BC-R/A mates with FAW-P-MP.
- Thread length is 1.00" standard. If shorter thread is required, specify as follows: FAW-P(or S)-BC-R/A (1/2" thread length).*
- Available thread length: 1/2", 3/4" and 1". *
- Bulkhead mounting torque: 40 inch pounds.
- Nuts and washer supplied.
- Do not dry mate FAW connectors.
- Dummy connectors: Optional.
- Dummy Shorting Plug: Optional

contact configurations - face view

FAWL-2S-BC-R/A

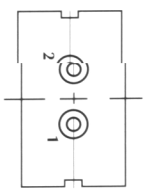

FAWL-3S-BC-R/A

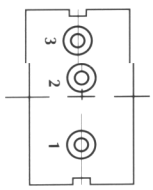

FAWL-4S-BC-R/A

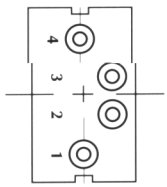

FAWL-5S-BC-R/A

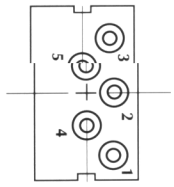

FAWM-8S-BC-R/A

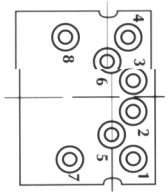

FAWM-10S-BC-R/A

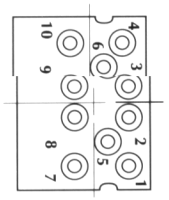

SEA CON A

FAW-P MP/ FAW-S-MP in-line connectors

FAW-P-MP In-Line

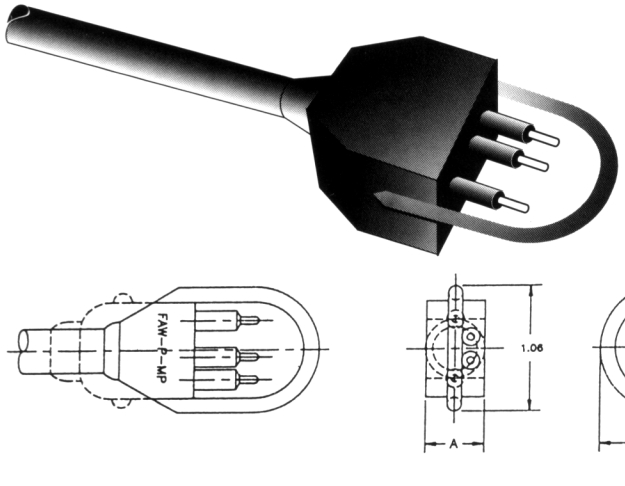

connector	A
FAWL-P-MP	.50
FAWM-P-MP	.63

contact configurations - face view

FAWL-2P-MP

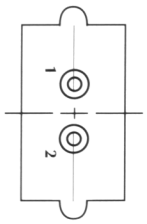

FAWL-3P-MP

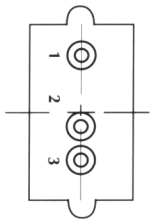

FAWL-4P-MP

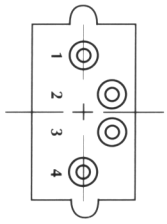

FAWL-5P-MP

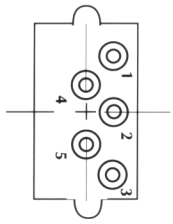

FAWM-8P-MP

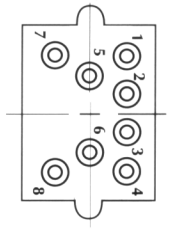

FAWM-10P-MP

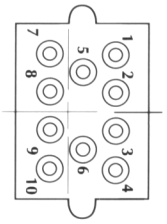

FAW-S-MP In-Line

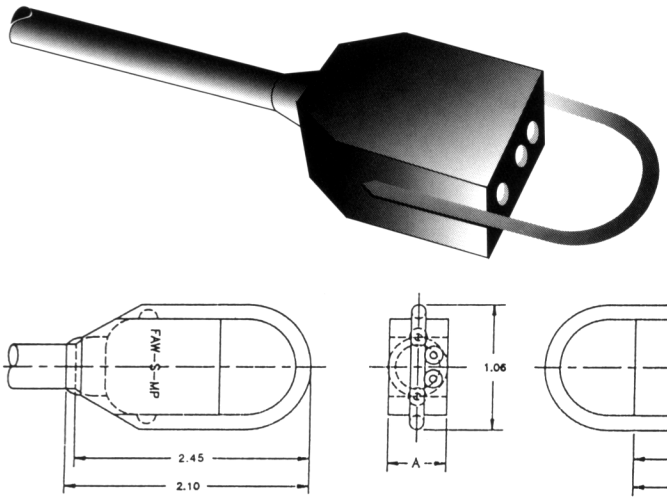

connector	A
FAWL-S-MP	.50
FAWM-S-MP	.63

notes

- FAW-P-MP mates with FAW-S-FS and FAW-S-BC-R/A.
- FAW-S-MP mates with FAW-P-FS and FAW-P-BC R/A.
- Neoprene lanyard wraps around groove on In-line or bulkhead mate.
- Dummy connectors: Optional.
- Dummy Shorting Plug: Optional
- Do not dry mate FAW connectors.
- The broken lines show the body of the FAWM-P/S-MP.

contact configurations - face view

FAWL-2S-MP

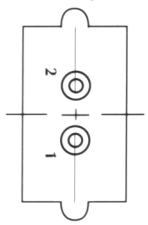

FAWL-3S-MP

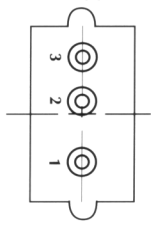

FAWL-4S-MP

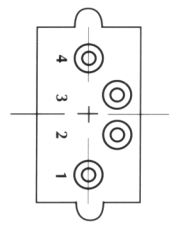

FAWL-5S-MP

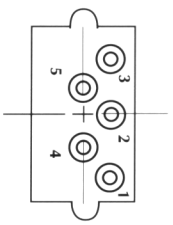

FAWM-8S-MP

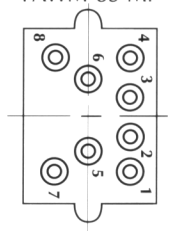

FAWM-10S-MP

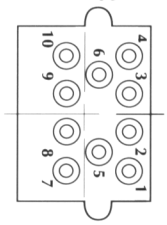

SEA CON® A

ALL WET™ FAW/Flat Series

FAW-P-FS / FAW-S-FS in-line connectors

FAW-P-FS In-Line

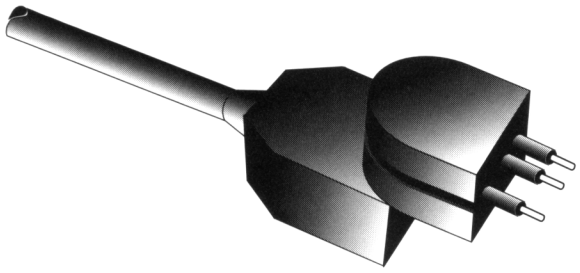

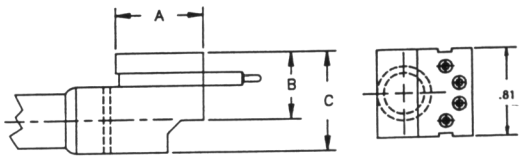

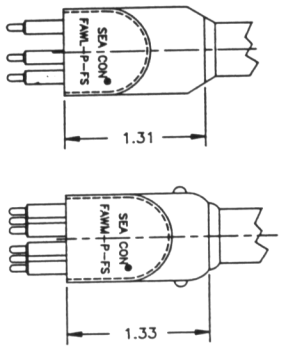

connector	A	B	C
FAWL-P-FS	.81	.50	.88
FAWM-P-FS	.98	.63	.94

contact configurations - face view

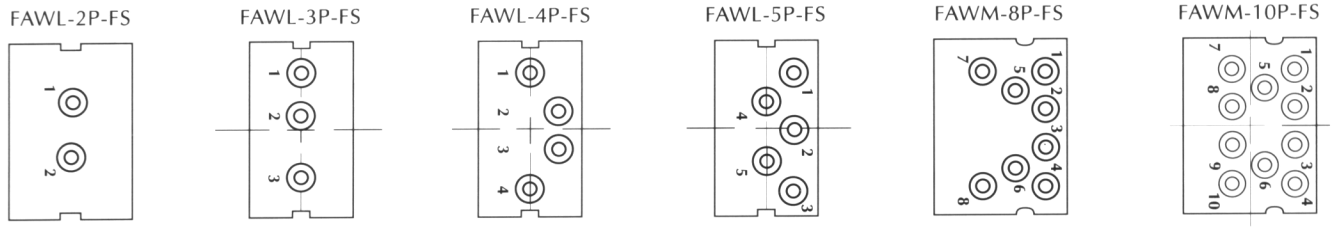

FAW-S-FS In-Line

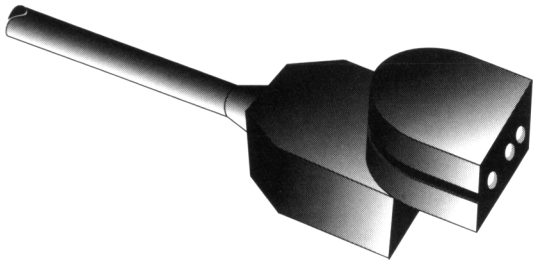

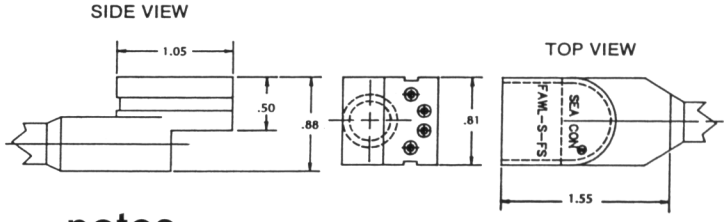

notes

- FAWL-P-FS mates with FAWL-S-MP.
- FAWL-S-FS mates with FAWL-P-MP
- Dummy connectors: Optional.
- Dummy Shorting Plug: Optional
- Do not dry mate FAW connectors.

contact configurations - face view

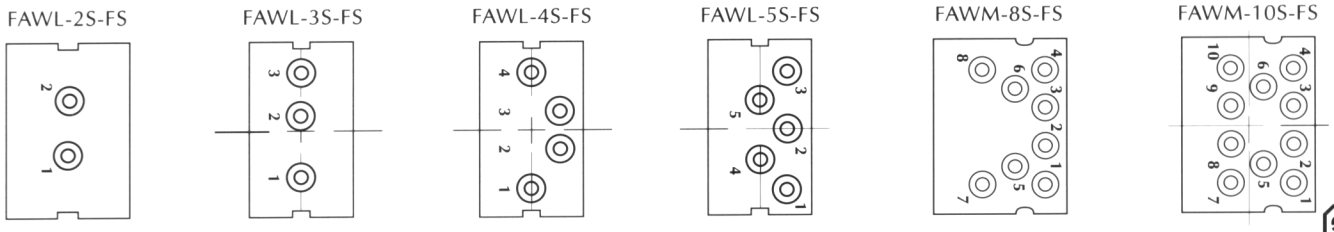

SEA CON® A

MAW - miniature hermaphroditic in-line connectors

MAW-2-HC w/ 1 N 2 cable

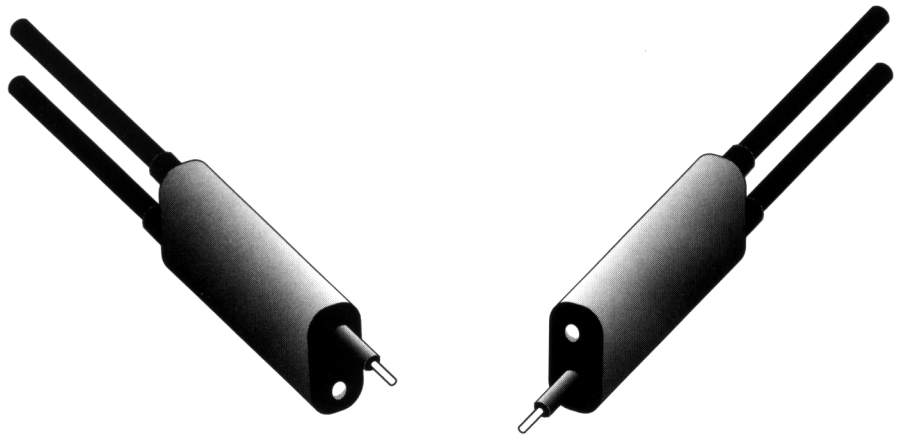

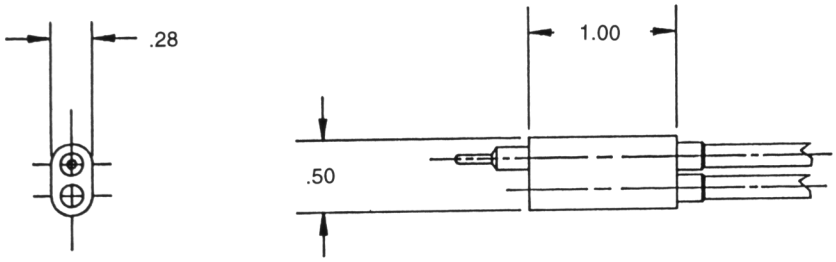

notes

- MAW-2-HC mates with itself, and MAW-2-HC BC R/A.
- Current-carrying capacity: 3 AMPS per contact.
- Operating pressure: 10,000 PSI
- Open face pressure: 1,000 PSI
- Working voltage: 300 VDC.
- Dummy connector: Optional.
- Dummy Shorting Plug: Optional

MAW-2-HC w/ 18/2 SJO cable

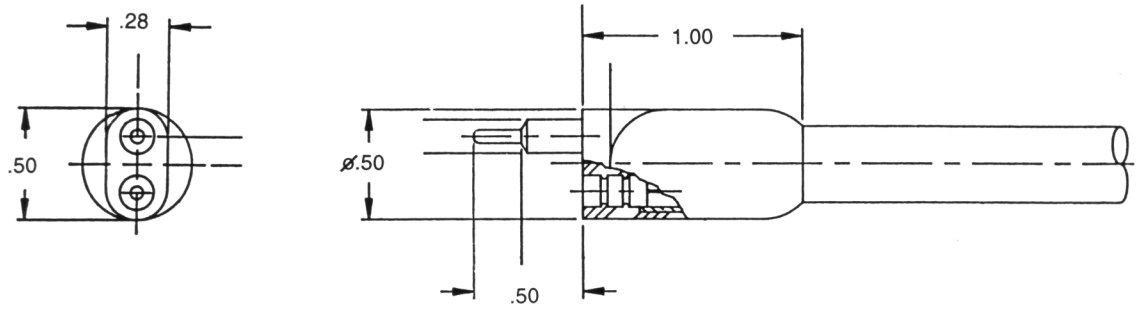

SEA CON A

ALL WET™ MAW/Miniature Hermaphroditic Series bulkhead connectors

MAW-2-HC-BC

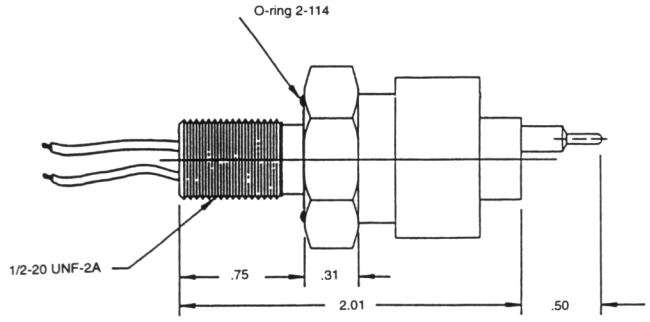

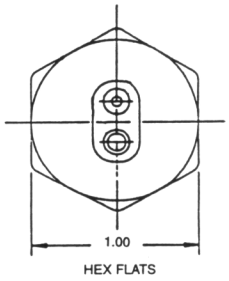

notes

- MAW-2-HC-BC mates with MAW-2-HC.
- Dummy connector: Optional.
- Dummy Shorting Plug: Optional
- Do not mate dry connectors.
- Nut and washer: Optional
- For GRE bulkhead mounting torques please contact factory.
- Torque value referenced in this literature assume installation into dry metal thread. For other applications please contact factory for recommendations.

MAW-2-HC-BC-R/A

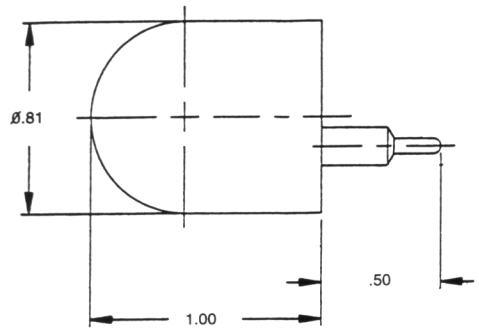

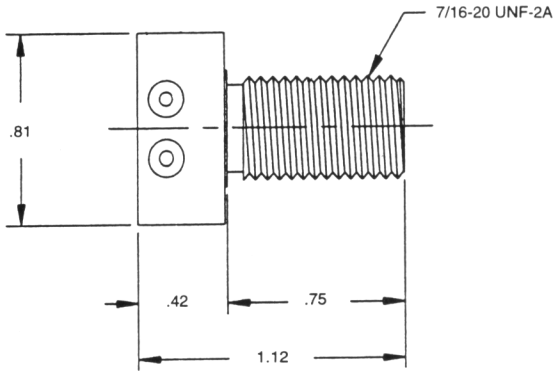

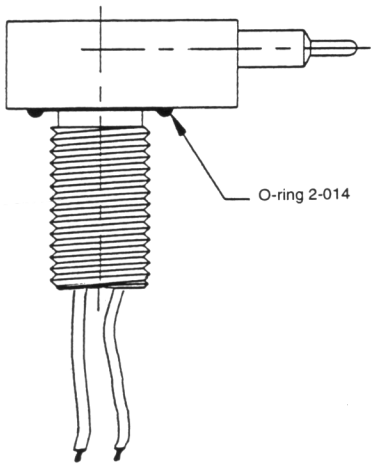

notes

- MAW-2-HC-BC-R/A mates with MAW-2-HC.
- Dummy connector: Optional.
- Dummy Shorting Plug: Optional
- Do not mate dry connectors.
- Nut and washer: Optional

SEA CON® A

Handling Procedures and Special Capabilities

installation procedure

Torque values referenced in this literature assume installation into dry metal trheads. For other applications, please contact the factory for recommendations.

Bulkhead Connector (BC): The BC may be installed using one of two methods. The preferred method is to spotface the bulkhead surface and thread the hole, then screw the connector by means of a nut and washer. The bored hole (or threaded hole) should be free of any “burrs” and all O-ring sealing surfaces polished to a number 32 finish. Lubricate the BC O-ring with an appropriate silicone spray or grease before installing. This lubrication should be applied to form an adequate film. Excessive lubrication is detrimental to the operation of the connector. Bulkhead nut, if used, should not be overtorqued.

IN LINE CONNECTOR: Lubricate the sealing areas around the male pins, using an appropriate silicone spray, or grease lightly.

care and maintenance

The ALL WET™ and WET CON™ connectors require very little maintenance. They are designed to be used in harsh environments and thus limited amounts of dirt and grit do not affect their performance.

It is recommended that, upon disconnecting or retrieving the system, the connectors be cleaned, regreased and remated prior to storage (if possible, remate with dummy plugs).

Prior to deployment the following maintenance procedure is recommended:

1. Demate the connector set.
2. Flush connector interface with fresh water (deionized water if available), remove all dirt, grit and grease.
3. Inspect for damage in sealing areas, excessive corrosion, debonding of the cable and connector interface area, and cuts in the cable jacket.
4. Apply thin film of dilectric compound (DC) grease, silicon based, to sealing areas of male connector and across the face of the female connector*. If the BC is removed from it’s housing then replace facial O’ring and make sure that O-rings are lubricated and in good condition.
5. Mate the connector halves, wipe away any excess grease off the interface line of the mated set.

   CAUTION: The use of some oil-based propellants in spray cans can cause conductivity problems in neoprene.

cable and continuity preservation

Avoid sharp bends in cables. Cables subjected to vibration or exposed to seawater drag should be adequately clamped to prevent conductor fatique and ultimate failure.

special assemblies

SEA CON® maintains all facilities necessary to furnish complete underwater and environmental electrical connector/cable systems, including Research and Development, Engineering, Manufacturing, Quality Control and Pressure Testing.

As well as supplying our standard ‘off-the-shelf’ items, we have the capability to design and manufacture **SPECIAL CUSTOMIZED CONNECTORS AND CABLE ASSEMBLIES** to suit you individual needs.

SEA CON® also prides itself with the ability to perform stringent quality conformance testing procedures which are in accordance with the Mil-spec programs.

WET CON™ Series

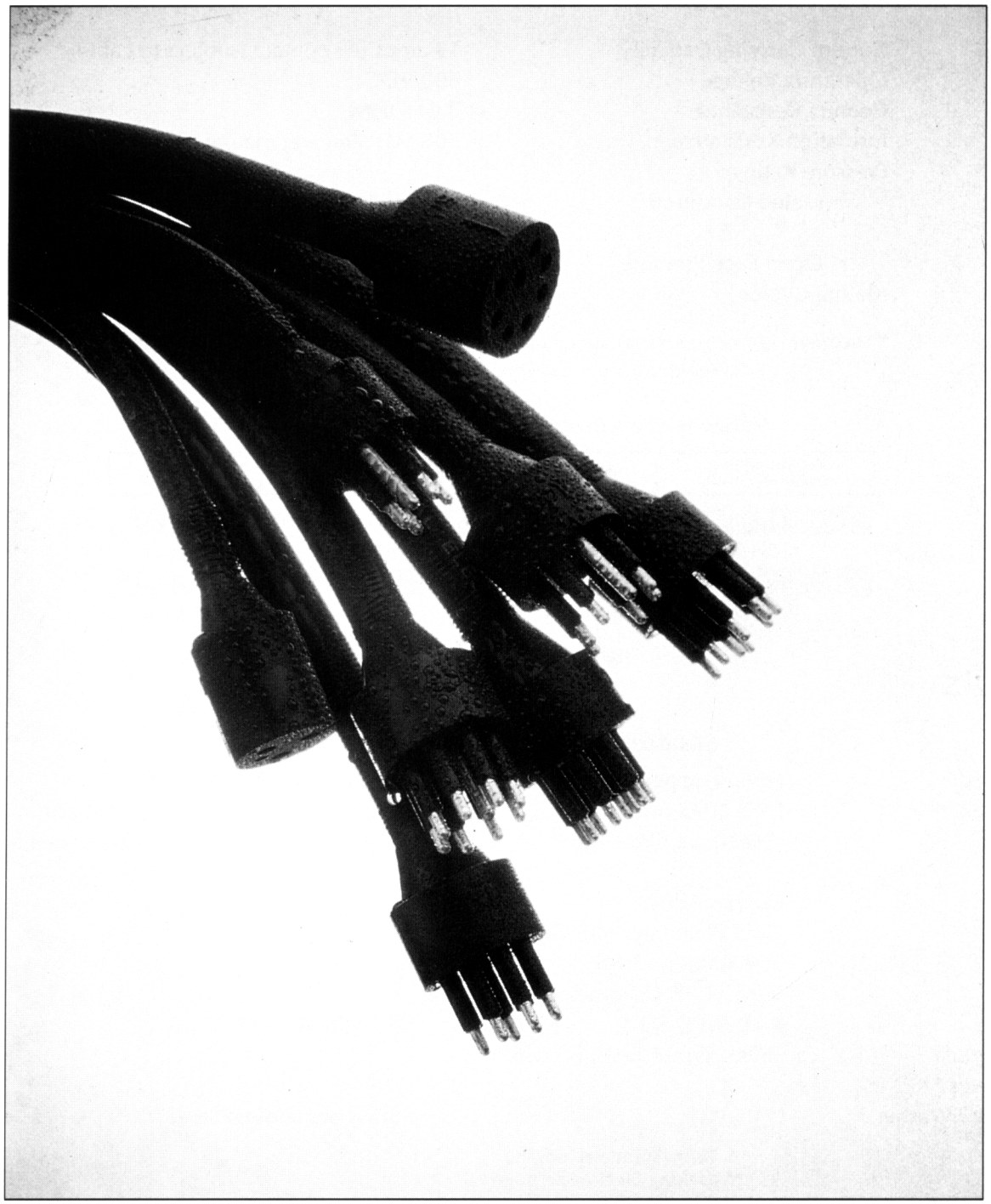

SEA CON® C

WET CON™ Series

specifications

Current Carrying Capacity	19 amps per contact (subject to cable) *
Operating Voltage	600 VDC
Contact Resistance	< 0.01 OHM
Insulation Resistance	> 500 MΩ after wet mating
Pressure Ratings	
Mated Condition	In-line: 20,000 psi (46,000 ft)
	Bulkhead 10,000 psi (23,000 ft)
Open Face Pressure	Bulkhead 1,000 psi (2,300 ft)
Mating Cycles	> 500 wet matings **

* Maximum current carrying capacity for contacts may be affected by cable selection.
**Provided proper handling procedures are adhered to.

Ampacity chart for standard parts (18 AWG SO cable)

Part description number of contacts	Ampacity	Part description number of contacts	Ampacity
IL-BH-2	7 Amps	IL-BH-8	4.9 Amps
IL-BH-3	7 Amps	IL-BH-10	3.5 Amps
IL-BH-4	5.6 Amps	IL-BH-12	3.5 Amps
IL-BH-6	5.6 Amps	IL-BH-16	3.5 Amps

Higher ampacities are available

materials

	Standard	Optional
Connector Body	Neoprene per B/A X5727	Hypalon per B/A X6830
Bulkhead Shell	DGS 1043 or	316 Stainless Steel (no cost option)
	CA630 per QQ-C-465	6061-T6 Aluminum, Hard Anodized
Contacts	Copper Alloy	
	Gold Plated per MIL-G-45204	
Guide Pins	304 Stainless Steel	
O-Rings	Buna N, 70 Durometer	
In-Line Cable	# 18 AWG SO *	# 14 OR # 16 AWG SO
Bulkhead Pigtails	Teflon Type E hook-up wire*	
Locking Sleeves **		Delrin
Bulkhead Nut / Washer		Brass or Stainless Steel

* 18 in. standard length
** Locking Sleeves on page 15-7.

standard wiring color code

CAUTION:

WET CON™ connectors are intended to mate with WET CON™ connectors only. Although the WET CON™ and ALL WET™ connectors look similar, the numbering pattern and color codes are not the same.

We recommend, as general practice, to verify color code and pin location before installation.

Standard In-Line Color Code (SO cable)

CONTACT #	COLOR	CONTACT #	COLOR
1	Black	9	Green / Black
2	White	10	Orange / Black
3	Red	11	Blue / Black
4	Green	12	Black / White
5	Orange	13	Red / White
6	Blue	14	Green / White
7	White / Black	15	Blue / White
8	Red / Black	16	Black / Red

WET CON™ Series part numbering system

When ordering, specify as follows:

BH: Bulkhead Connector

example: BH - 4 - MP

- BH: WET CON™ Bulkhead
- 4: number of contacts
- MP: male plug (FS: female socket)

IL: In-Line Connector

example: IL - 4 - FS

- IL: WET CON™ in-line
- 4: number of contacts
- FS: female socket (MP: male plug)

Locking Sleeves

Locking Sleeves are available for WET CON™ connectors as an option.

example: DLSA - M

- DLSA: Delrin Locking Sleeve
- A: size (B & C)
- M: male, F: female

notes

- Size A fits 2, 3 and 4 contact patterns.
- Size B fits 6, 8 and 10 contact patterns.
- Size C fits 12 and 16 contact patterns.

Dummy Connectors

Dummy connectors are available parts in the WET CON™ series.

example: DC - 4 - FS

- DC: WET CON™ Dummy Connector
- 4: number of contacts
- FS: female (MP: male)

WET CON™ Series
bulkhead connectors (2-10 contacts)

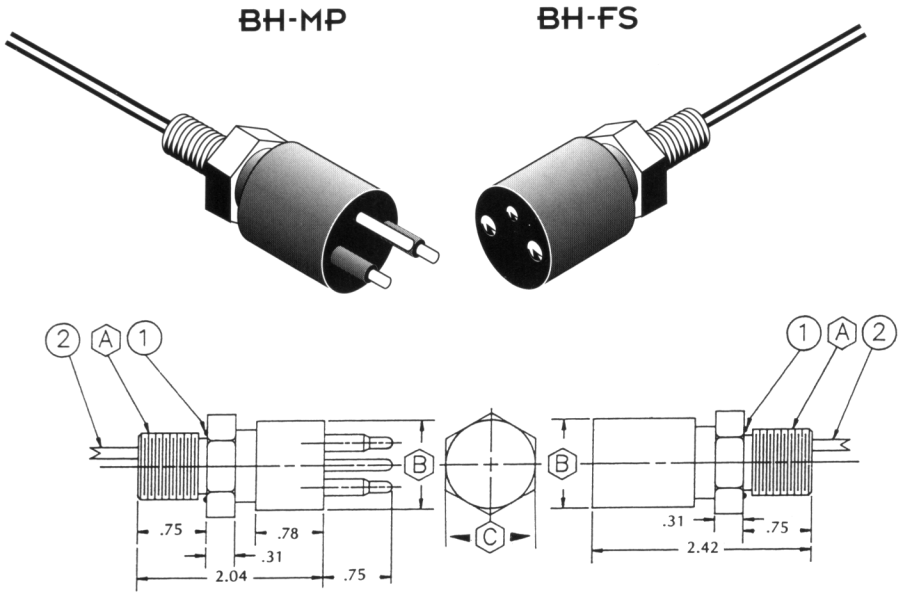

Part No.	Ⓐ Thread	① O-Ring	Ⓒ Hex Flats Inches	Ⓑ Inches	② Hook-Up Wire
BH-2-MP/FS	7/16-20 UNF-2A	2-014	.75	1.00	18 AWG
BH-3-MP/FS	7/16-20 UNF-2A	2-014	.75	1.00	18 AWG
BH-4-MP/FS	7/16-20 UNF-2A	2-014	.75	1.00	18 AWG
BH-6-MP/FS	5/8-18 UNF-2A	2-017	1.00	1.25	18 AWG
BH-8-MPX/FSX	5/8-18 UNF-2A	2-017	1.00	1.25	18 AWG
BH-10-MP/FS	5/8-18 UNF-2A	2-017	1.00	1.25	18 AWG

notes

- BH-MP mates with IL-FS.
- BH-FS mates with IL-MP.
- Bulkhead mounting torque: 7/16 thread = 50 inch pounds.
- Nut and washer: Optional.
- Dummy Connector: Optional.
- Dummy Shorting Plug: Optional
- O' Ring: Buna-N 70 Duro
- BH Shell DGS 1043 CA 630 Stainless Steel: No cost optional
- Bulkhead leads are tagged with pin number. (Optional)
- Do not dry mate connectors.
- Torque values referenced in this literature assume installation into dry metal threads. For other applications, please contact the factory for recommendations.

contact configurations - face view

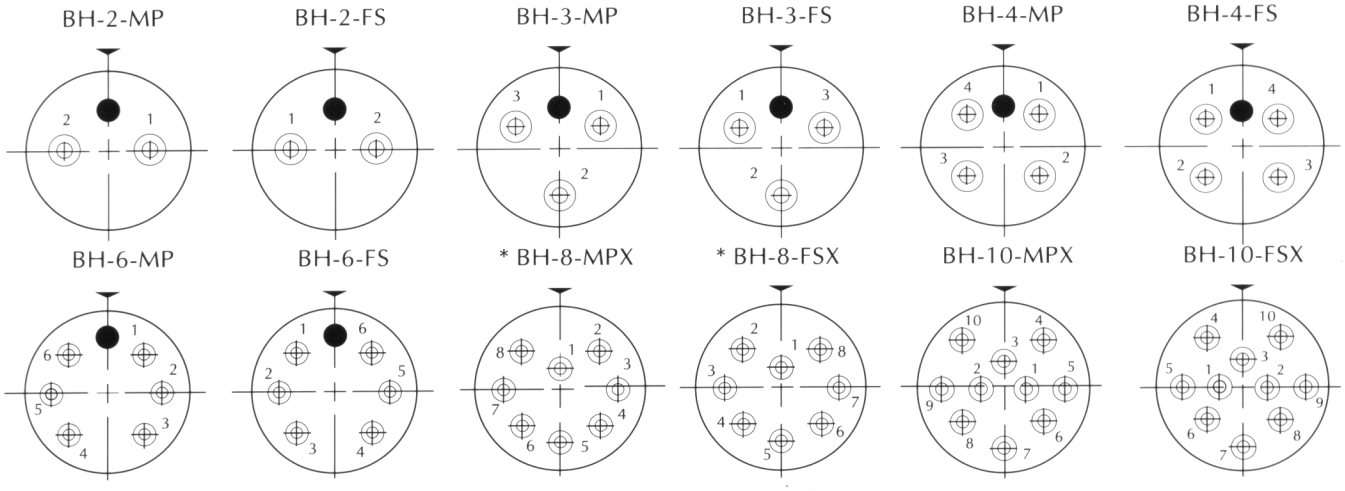

* BH-8-MPX and BH-8-FSX patterns are recommended for new applications.

WET CON™ Series
in-line connectors (2-10 contacts)

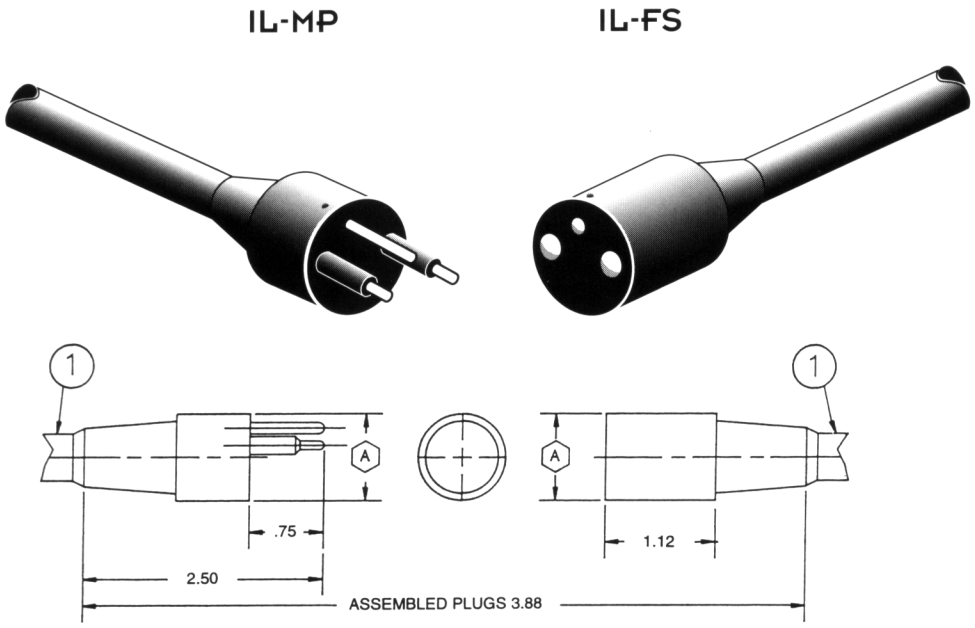

Part No.	Ⓐ Inches	① Cable	Approx Cable Ø
IL-2-MP/FS	1.00	18/2 SO	9.0 mm (.354")
IL-3-MP/FS	1.00	18/3 SO	9.4 mm (.372")
IL-4 MP/FS	1.00	18/4 SO	10.2 mm (.402")
IL-6-MP/FS	1.25	18/6 SO	13.3 mm (.525")
IL-8MPX/FSX	1.25	18/8 SO	15.2 mm (.600")
IL-10-MP/FS	1.25	18/10 SO	16.3 mm (.640")

notes

- IL-MP mates with BH-FS and IL-FS.
- IL-FS mates with BH-MP and IL-MP.
- Locking Sleeve: Optional (see page 15-7).
- Dummy Connector: Optional.
- Dummy Shorting Plug: Optional

contact configurations - face view

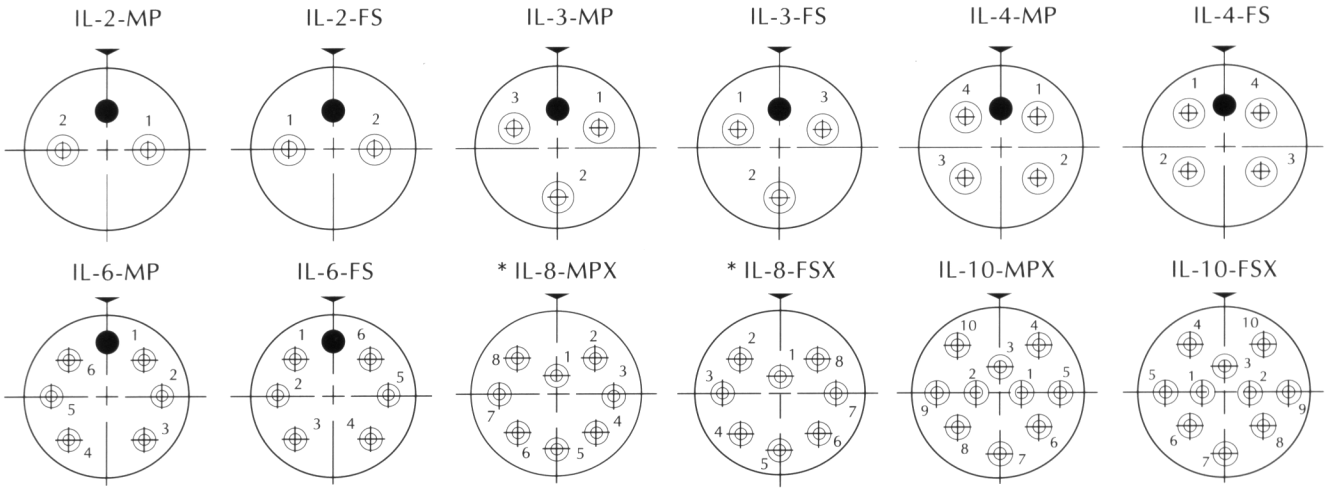

* IL-8-MPX and IL-8-FSX patterns are recommended for new applications.

WET CON™ Series
bulkhead connectors (12-16 contacts)

BH-MP **BH-FS**

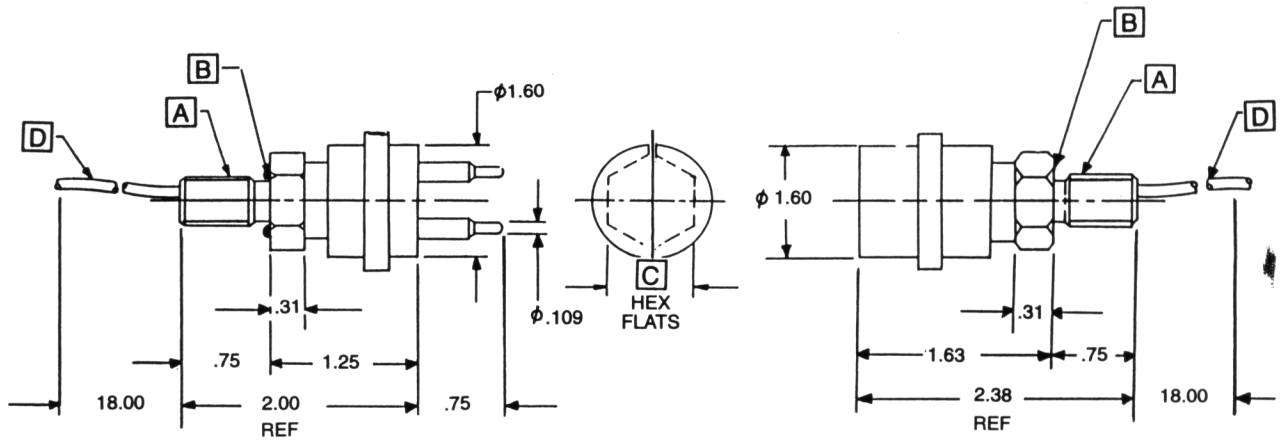

Part No.	A Thread	B O-Ring	C Hex Flats Inches	Connector Ø	D Hook-Up Wire
BH-12-MP/FS	5/8-18 UNF-2A	2-017	1.00	1.60	18 AWG
BH-16-MP/FS	3/4-16 UNF-2A	2-118	1.25	1.60	18 AWG

contact configurations - face view

BH-12-MP BH-12-FS BH-16-MP BH-16-FS

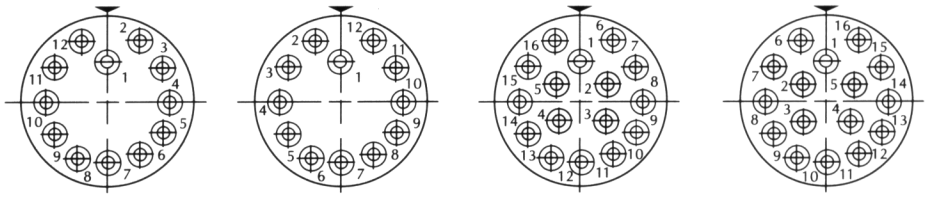

notes

- BH-MP mates with IL-FS.
- BH-FS mates with IL-MP.
- Locking Sleeve: Optional (see page 15-7).
- Nut and washer: Optional.
- Dummy Connector: Optional.
- O' Ring: Buna-N 70 Duro
- BH Shell DGS 1043 CA 630 Stainless Steel: No cost optional
- Bulkhead leads are tagged with pin number (optional)
- Do not dry mate connectors.
- Bulkhead Mounting Torque: 5/8 Thread = 85 inch pounds 3/4 Thread = 85 inch pounds
- Torque values referenced in this literature assume installation into dry metal threads. For other applications, please contact the factory for recommendations.

SEA CON C

WET CON™ Series
in-line connectors (12-16 contacts)

IL-MP

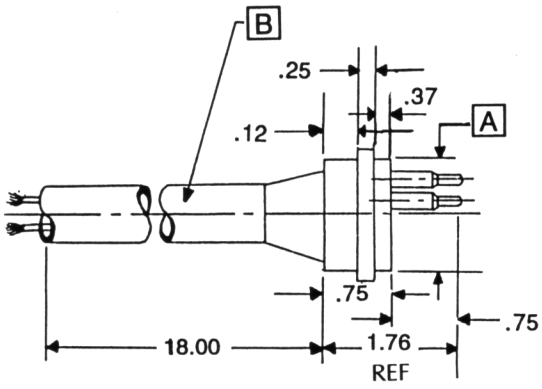

IL-FS

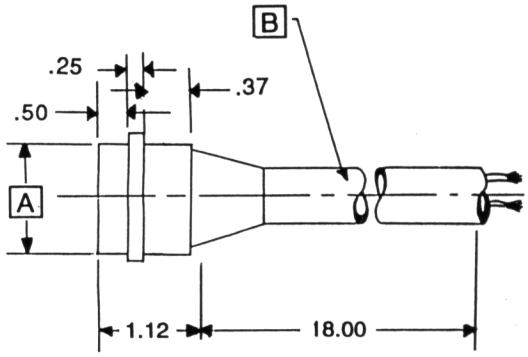

Part No.	A Inches	B Cable	Approx Cable Ø
IL-12-MP/FS	1.60	18/12 SO	16.8 mm (.660")
IL-16-MP/FS	1.60	18/16 SO	19.3 mm (.760")

notes

- IL-MP mates with BH-FS and IL-FS.
- IL-FS mates with BH-MP and IL-MP.
- IL-16-MP WOC is not available, substitute with BH-16-M.
- Locking Sleeve: Optional (see page 15-7).
- Dummy Connector: Optional.
- Do not dry mate connectors.

contact configurations - face view

IL-12-MP

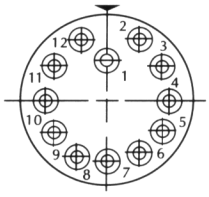

IL-12-FS

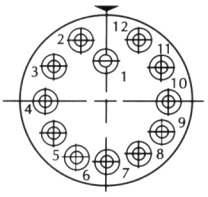

IL-16-MP

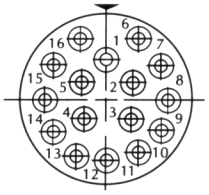

IL-16-FS

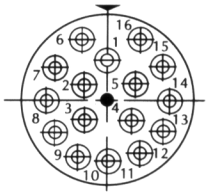

standard wiring color code

Standard In-Line Color Code (SO cable)

CONTACT #	COLOR
1	Black
2	White
3	Red
4	Green
5	Orange
6	Blue
7	White / Black
8	Red / Black

CONTACT #	COLOR
9	Green / Black
10	Orange / Black
11	Blue / Black
12	Black / White
13	Red / White
14	Green / White
15	Blue / White
16	Black / Red

WET CON™ Series
locking sleeves

DLS - F

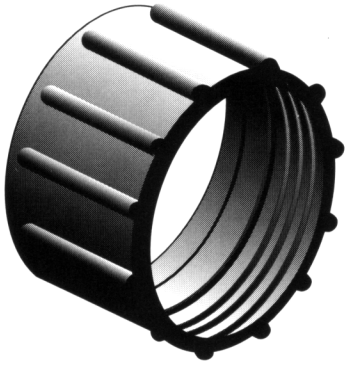

DLS - M



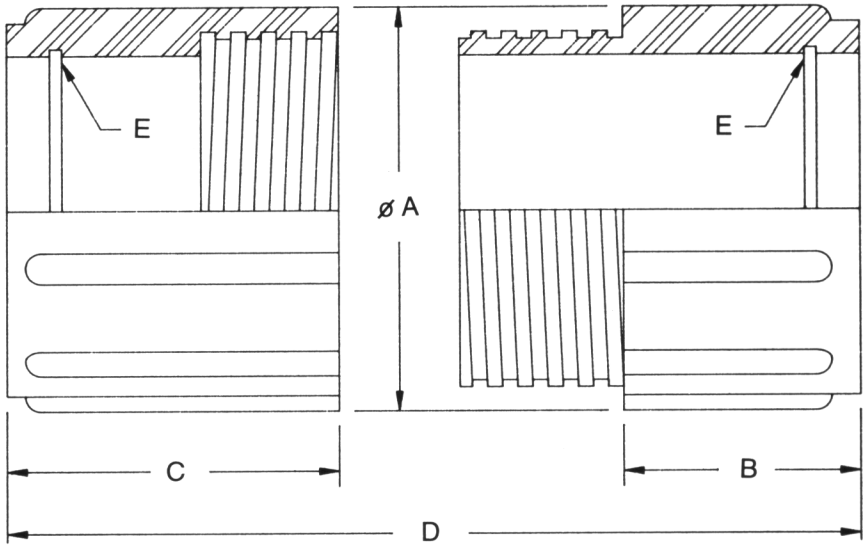

Mated Length

notes

- Spirolox Rings: Stainless Steel *

WET CON™ Locking Sleeves	A	B	C	D	E*
DLSA-M	1.40	.90	——	2.19	RR 103
DLSA-F	1.40	——	1.29		RR 103
DLSB-M	1.62	.94	——	2.26	RR 125
DLSB-F	1.62	——	1.32		RR 125
DLSC-M	2.37	.78	——	1.95	RR 187
DLSC-F	2.38	——	1.17		RR 187

SEA CON C

Handling Procedures and Special Capabilities

installation procedure

Torque values referenced in this literature assume installation into dry metal trheads. For other applications, please contact the factory for recommendations.

Bulkhead Connector (BC): The BC may be installed using one of two methods. The preferred method is to spotface the bulkhead surface and thread the hole, then screw the connector by means of a nut and washer. The bored hole (or threaded hole) should be free of any “burrs” and all O-ring sealing surfaces polished to a number 32 finish. Lubricate the BC O-ring with an appropriate silicone spray or grease before installing. This lubrication should be applied to form an adequate film. Excessive lubrication is detrimental to the operation of the connector. Bulkhead nut, if used, should not be overtorqued.

IN LINE CONNECTOR: Lubricate the sealing areas around the male pins, using an appropriate silicone spray, or grease lightly.

care and maintenance

The ALL WET™ and WET CON™ connectors require very little maintenance. They are designed to be used in harsh environments and thus limited amounts of dirt and grit do not affect their performance.

It is recommended that, upon disconnecting or retrieving the system, the connectors be cleaned, regreased and remated prior to storage (if possible, remate with dummy plugs).

Prior to deployment the following maintenance procedure is recommended:

1. Demate the connector set.
2. Flush connector interface with fresh water (deionized water if available), remove all dirt, grit and grease.
3. Inspect for damage in sealing areas, excessive corrosion, debonding of the cable and connector interface area, and cuts in the cable jacket.
4. Apply thin film of dilectric compound (DC) grease, silicon based, to sealing areas of male connector and across the face of the female connector*. If the BC is removed from it’s housing then replace facial O’ring and make sure that O-rings are lubricated and in good condition.
5. Mate the connector halves, wipe away any excess grease off the interface line of the mated set.

   CAUTION: The use of some oil-based propellants in spray cans can cause conductivity problems in neoprene.

cable and continuity preservation

Avoid sharp bends in cables. Cables subjected to vibration or exposed to seawater drag should be adequately clamped to prevent conductor fatique and ultimate failure.

special assemblies

SEA CON® maintains all facilities necessary to furnish complete underwater and environmental electrical connector/cable systems, including Research and Development, Engineering, Manufacturing, Quality Control and Pressure Testing.

As well as supplying our standard ‘off-the-shelf’ items, we have the capability to design and manufacture **SPECIAL CUSTOMIZED CONNECTORS AND CABLE ASSEMBLIES** to suit you individual needs.

SEA CON® also prides itself with the ability to perform stringent quality conformance testing procedures which are in accordance with the Mil-spec programs.

FIBER OPTIC CONNECTORS



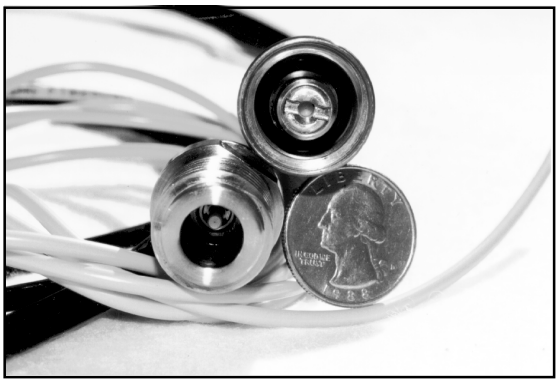

APPLICATIONS

As organizations in the underwater community are continuing to develop more applications with fiber optic technology in mind, there has been a dramatic increase in the quantity and complexity of electro-optic connector configurations needed to fit these applications. Multi-channel hybrid connectors are finding increased usuage in sonar and surveillance systems, real time video applications, ROV's/AUV's, and geophysical search equipment.This names a few of the industries taking advantage of the latest fiber optic connection technology.

In order to serve the changing needs of its customers, SEA CON® has developed a range of fiber optic products built to withstand a variety of environmental conditions, including hydrostatic pressure, vibration, thermal and explosive shock. With the absence of any universal specifications for underwater fiber optic connectors, product development has concentrated on adding fiber optic capabilities to existing electrical connector designs. In accordance with these design objectives, SEA CON® has successfully built and delivered several configurations of MINI-CON™ and Metal Shell electro-optic connectors, some of which have been qualification tested and are in operation.

PRODUCTS

As with any underwater connection system, the shells or housing remain a critical feature. The inclusion of fiber optics into a connector design is best achieved with a proven underwater shell design like SEA CON®'s MINI-CON™ line. This series is one of the few underwater connector designs which have been qualification tested to the requirements of military subsea specifications.

Our product design used singlemode or multimode fibers in the multi-channel applications as well as electro-optical hybrid design. These designs can be adapted to withstand hydrostatic pressures in an open face condition. Our design solutions are specific for each customer application and we use proven fiber optic connection techniques to produce reliable, low loss connector interfaces.

Furthermore, reliability and repeatability in electro-optic connectors is accomplished by adapting commercially available fiber optic termini into the traditional electrical insert. Aside from providing an optical retro-fit for established systems, this method builds on the successful history of common optical products like ST and FC connectors.

SEA CON® has taken this development a step further by adding open face pressure capability to the list of features in its electro-optic series. This is almost always recommended for the receptable in a connector set, and thus provides an added level of seal security. Our company has also provided plug connectors with similar open face pressure ratings.

These design considerations, along with some other important ones, are summarized on (page 20-2) as a means to familiarize customers with some relevant selection criteria.

FIBER OPTIC CONFIGURATIONS

MINF-1FO
LONG



MINM-3FO
LONG

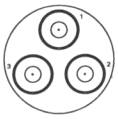

MINO-4FO
LONG

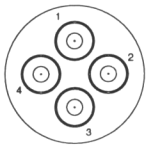

MINO-2FO / 2#16
LONG

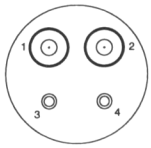

MINO-12FO / 2#20
LONG

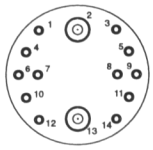

MINP-4FO
LONG

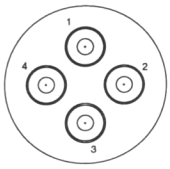

MINQ-3FO / 4#16
LONG

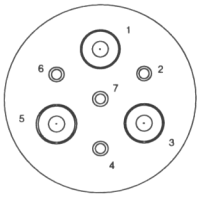

MINR-6FO / 2#16
LONG

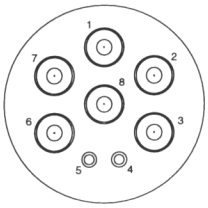

MINR-8FO / 6#16
LONG

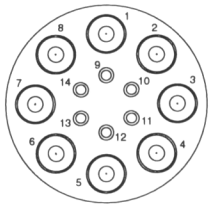

MINT-4FO/ 9#16/ 2#14
LONG

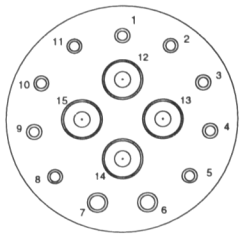

MSSM-4FO / 8#16

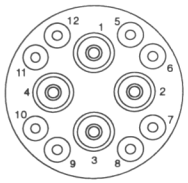

MSSO-1FO / 7#16

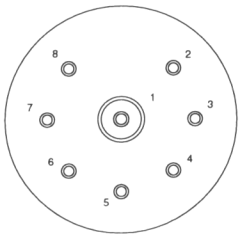

MSSQ-6FO / 4#10

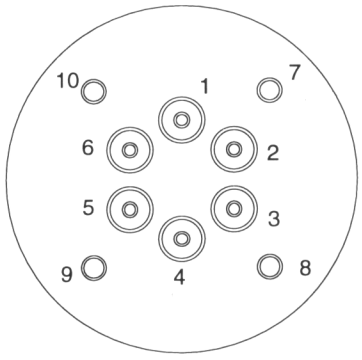

MSSQ-8FO / 4#10

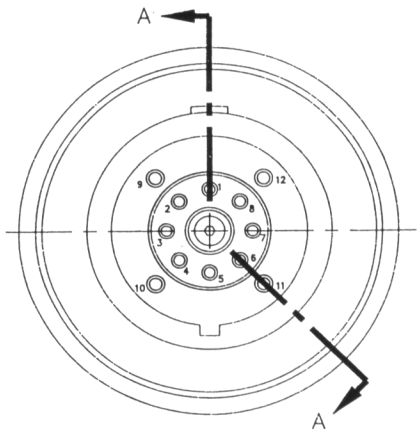

MSSS-8FO / 6#6 / 7#10

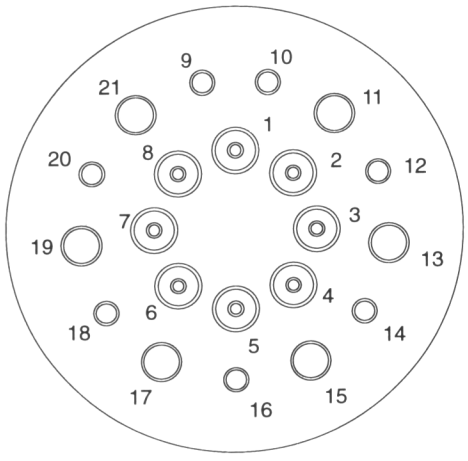

XSJJ-F-BCR

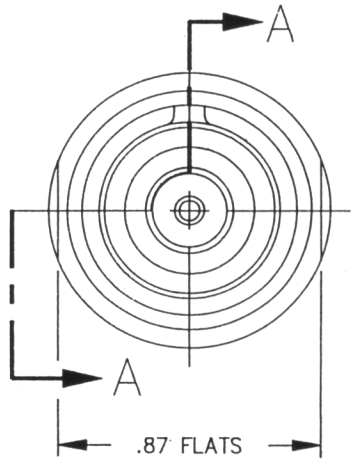

LATEST PRODUCT DEVELOPMENT
FIBER OPTIC CONNECTORS (UNDERWATER MATEABLE)

SEA CON® and Lockhead Martin, under a licensing agreement, have joined forces to develop, manufacture and market the CM HydraStar Series of underwater mateable electro/optical connectors. In 1995-96 Lockheed Martin successfully built and tested single-mode and multimode connectors with 12 optical fibers and two electrical circuits. Testing consisted of one hundred mate/demates in silty seawater, and one hundred mate/demates cycles at 10,000 psig in 2°C seawater. Insertion losses were consistently less than 0.5dB for both single and multimode fibers. Based on these successes Lockhead Martin and SEA CON® are continuing the development of the CM HydraStar Series by designing and manufacturing a simplified 8-channel connector (four optical and four electrical).

The primary objective of any fiber optic connector is to provide low loss optical connectons. Accomplishing this requires the optical circuits to be connected in a contamination free enviroment. To do this in harsh subsea environments, the optical elements of both halves of the connector require protection from direct exposure to the external fluid (seawater). The CM HydraStar uses a 'joined chamber' concept, which is detailed in this catalog, in order to achieve complete protection.

The joined chamber concept utilizes a unique set of poppet type seal rings which permit joining of two connector volumes without loss of internal fluid, or the ingestion of external fluids or other contaminants. Low loss optical connections are attained by using commerical off-the-shelf ferrules. Electrical connections are completed using standard pins and sockets.

If you have a need for underwater mateable fiber optic connectors, Lockheed Martin and SEA CON® are on the leading edge developing the next generation of low loss underwater mateable optical connectors!.

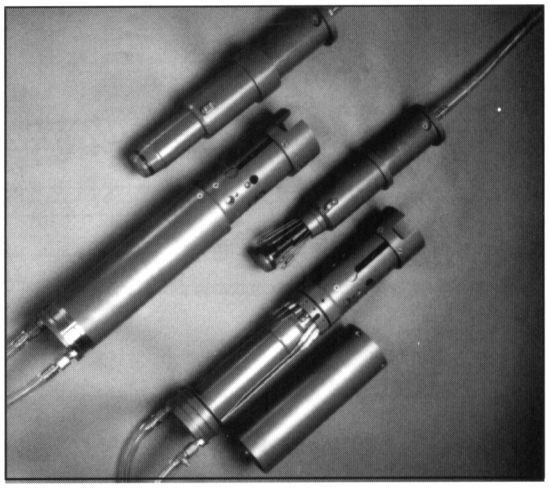

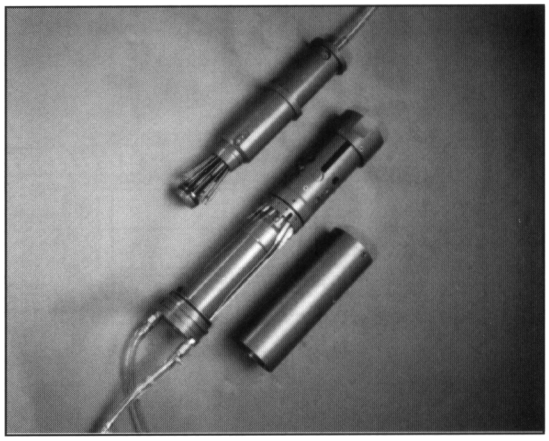

U.S. & FOREIGN PATENTS PENDING

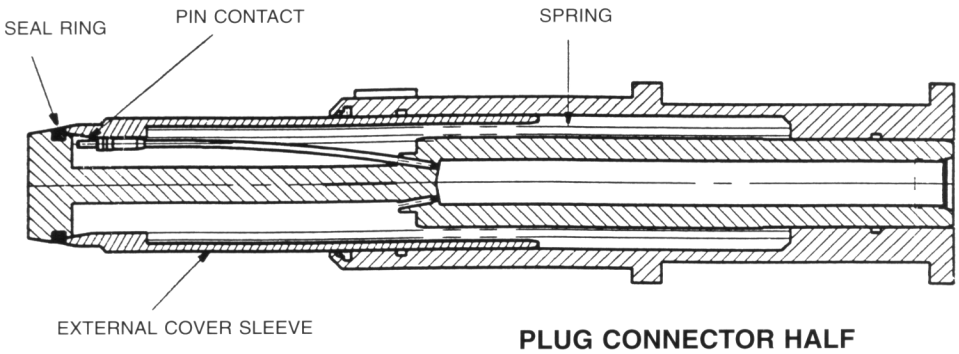

PLUG CONNECTOR HALF

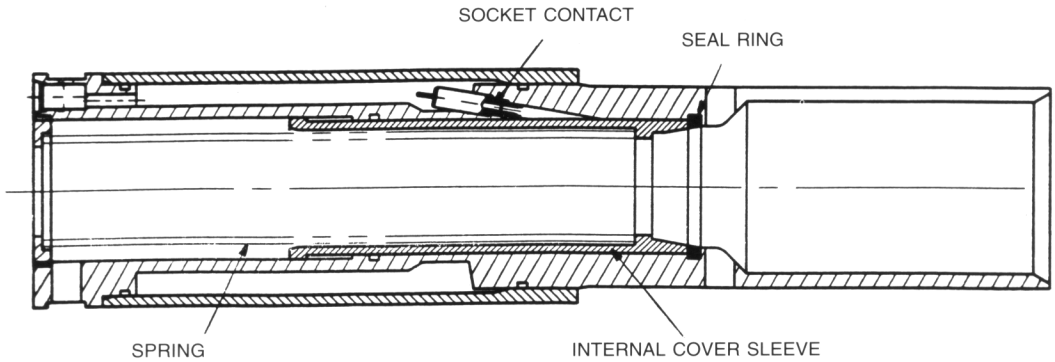

RECEPTACLE CONNECTOR HALF

SEA CON® AC

LATEST PRODUCT DEVELOPMENT
FIBER OPTIC CONNECTORS (UNDERWATER MATEABLES)

CONNECTION SEQUENCE

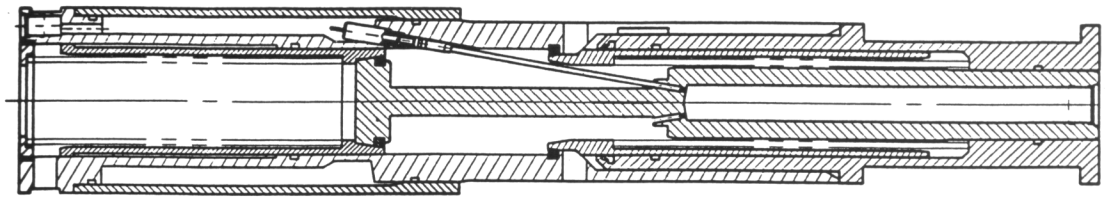

(1) PHYSICAL ALIGNMENT

(1) First, the two connector haves are physically aligned; The halves are centered axially by stepped mating diameters, and clocked rotationally by a key on the male half and a key way on the female half.

At the end of the alignment phase, the conical chamber seals on each half engage with their respective interface on the opposite connector half. The seals squeeze out all external fluid from the joint.

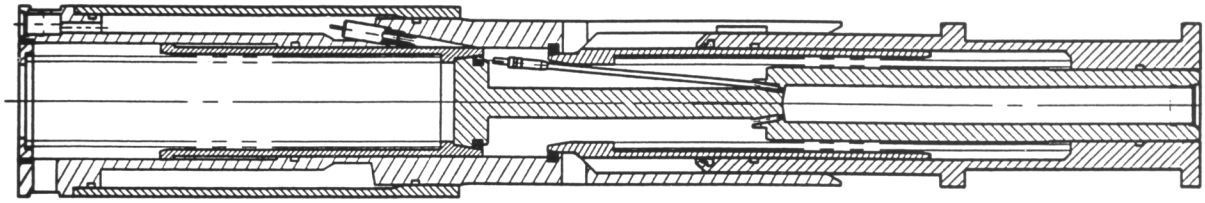

(2) JOIN CHAMBERS

(2) As mating continues, the female internal cover sleeve is retracted by the front end of the male connector and the external cover sleeve on the male connector is retracted by the female housing. This opens the poppet seals between the cover sleeve and housing of the male and female halves, thereby joining the fluid-filled chambers of both connector halves.

As the male external cover sleeve continues to retract the flexible tubes in the male half which were held down by the external cover sleeve are now released. The flexible tubes splay into internal guide grooves in the female housing.

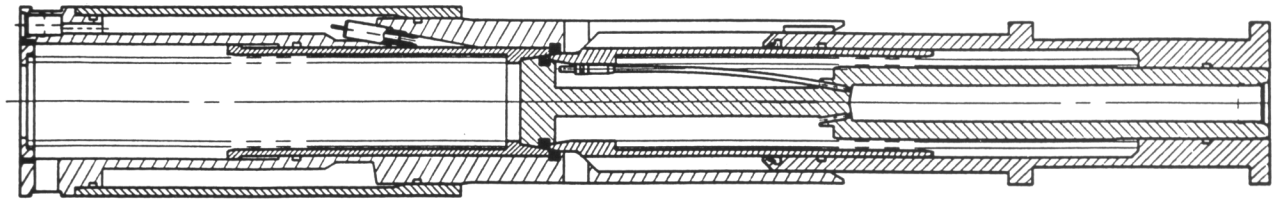

(3) MAKE CONTACTS

(3) Finally, the flexible guide tubes continue to splay until the contacts on the end of the flexible tube complete circuits with the contacts in the female half.

SELECTION CRITERIA FOR FIBER OPTIC CONNECTORS

NUMBER OF CONTACT / CONDUCTORS	Typical range from 1-8, although specialty applications may require as many as 50. Please see MINI-CON™ and Metal Shell sections of catalog for more information.
MATED PRESSURE REQUIREMENTS	Dependent upon underwater shell design, recommended MIL-C-24231, MIL-C-24217, or SEA CON® MINI-CON™ line
SHELL MATERIALS	Will depend upon choice of shell design (i.e. MINI-CON™, etc.) and material choice. Standard industry specification is 316 SST which will most often mean the least expensive design. Other suitable materials for underwater use and which increase pressure capabilities include Monel™, Titanium, 15-5 ph SST and Inconel™.
RECEPTABLE OPEN FACE PRESSURE REQUIREMENTS	Receptacle connectors are easiest to design for open faced pressure since this side most often includes fixed optic contacts. Pressure ratings of 20,000 psi can be achieved.
MATING CYCLES	Should be as commercially specified connectors. Typical specifications will usually include an added loss factor for 500 to 1000 matings.
OPTICAL ATTENUATION	Standard specification for single mode and multi-mode contacts is: < 1.0 db @ 1300 nm < 1.0 db @ 850 nm < 1.0 db @ 1310, 1550 nm Typical performance is most often 0.5 db
FIELD / LAB TERMINATIONS	Receptacle connectors are typically manufactured with pigtails by the connector manufacturers. It is also preferable to have the plug connector terminated at the factory, although in some instances as with longer bulky cable systems, the termination can be done in the field. The customer should have experience with fiber optic terminations and polyurethane molding procedures. SEA CON® is available for field installations.

CUSTOMER CHECKLIST FOR SEA CON® FIBER OPTIC JOBS

SPECIFY THE FIBER:

- ☐ Single Mode or Multi Mode and how many?
- ☐ Fiber size, Usually expressed in micron diameters. (i.e. 8.3/125 or 50/125 or 62.5/125)
- ☐ Wavelength light to be used and tested, we have test equipment for:
  - 850 and 1300 nanometers, multimode fibers
  - 1310 and 1550 nanometers, singlemode fibers
- ☐ Acceptable optical attenuation as a loss in decibels, we build to -1.0dB per connector.

CONNECTORS & CABLES IN GENERAL:

- ☐ What cable is to be used? Customer furnished or SEA CON® furnished.
  - CF cable should be accompanied with a cross sectional drawing detailing all diameters and materials, including the optical fiber components.
- ☐ Is the connector to be overmolded over field installable?
- ☐ What pressure will be used as a design maximum amount? (How deep will it go?)
- ☐ Is open face pressure rating required for either or both sides of the connector?
- ☐ Required temperature ratings, for use and extremes of storage.
- ☐ What materials to be used? (SST std for Mini-Con)
- ☐ What electrical requirements? Number and size of contacts, special IR requirements or HV?
- ☐ A general idea of environment for the connector to be used in, such as, ocean, mud, ice, downhole, hydrothermal, aircraft. Whatever, especiallly if it's not the ordinary.

ARMORED CABLES:

- ☐ Does the cable include an armor component? (Steel or Kevlar?)
- ☐ Does the armor need to be terminated in the connector? To what load?
- ☐ What is the tensile strength of the cable (breaking and working)?
- ☐ Is a bend limiter desired at the cable entry to back end of CCP?

SINGLE AND MULTI-PIN GLASS SEALED ELECTRICAL FEED THRU CONNECTORS

SEA CON®/Phoenix manufactures a variety of single and multi-pin feed thru connectors for use in hostile environments. These environments include underwater, down hole, geophysical exploration sites and aerospace. Our feed thrus are designed to handle high temperature, high pressure and a multitude of corrosive mediums.

All parts are electrically tested for voltage and insulation resistance parameters and helium leak checked to meet 1 x 10^{-9} cc/sec. on a mass spectrometer helium leak detection system and, if requested, are hydrostatically tested up to 20,000 psi.

SEA CON®/Phoenix engineers will custom design to your particular requirements. Please contact us with your specifications.

Materials

Stainless Steel, Inconel™, Nickel Iron (Alloy 52).

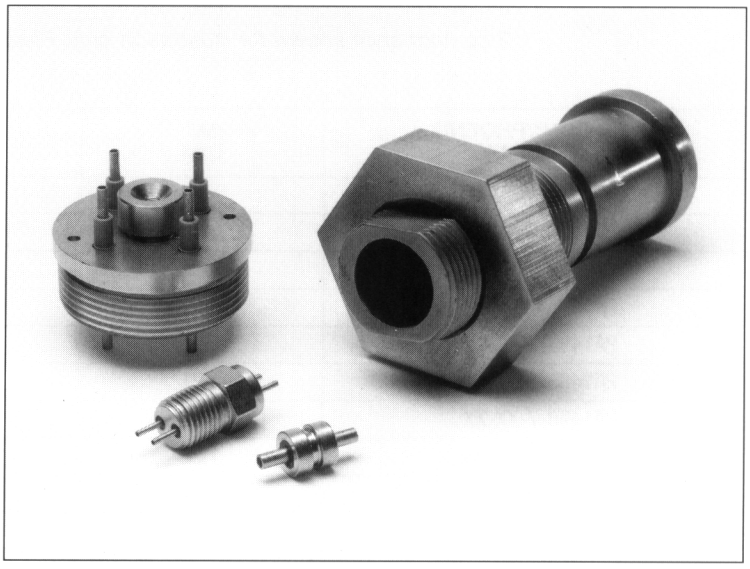

Plating

Gold, Silver, Tin, Nickel.

Pressure Rating

Units successfully tested to 1,000-20,000 PSI.

Temperature Rating

200-400° C.

High Potential

500 VAC applied between any two adjacent contacts or between shell and any contact, for a duration of one minute.

Insulation Resistance

500 Megohms or greater when measured between any pair of contacts and between contacts and shell, using 500 Volts DC Test.

Wire Terminations

10 AWG-24 AWG.

PENETRATOR, THREAD MOUNTING

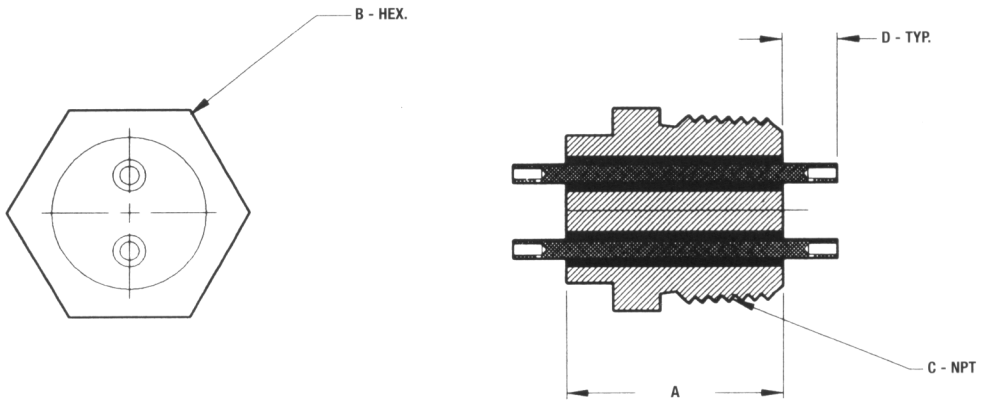

2 contact style shown for illustration only. Please call with your contact requirements.

SEA CON®/PHOENIX PART NUMBER	"A" DIM	"B" HEX	"C" NPT	"D" DIM
PA1496-1-XX-XX	.75	5/16	1/16	.25
PA1496-2-XX-XX	.75	7/16	1/8	.25
PA1496-3-XX-XX	.96	9/16	1/4	.25
PA1496-4-XX-XX	.99	11/16	3/8	.25
PA1496-5-XX-XX	1.21	7/8	1/2	.25
PA1496-6-XX-XX	1.21	1 1/16	3/4	.25
PA1496-7-XX-XX	1.50	1 3/8	1	.25
PA1496-8-XX-XX	1.59	1 3/4	1 1/4	.25
PA1496-9-XX-XX	1.74	2 1/8	1 1/2	.25
PA1496-10-XX-XX	1.96	2 3/4	2	.25

ORDERING DATA:

PA1496-XX-XX-XX

- XX — Basic Size
- XX — Number of Contacts
- XX — Wire AWG

D-SUBMINIATURE – MIL-C-24308/3 TYPE GLASS-SEALED CONNECTOR WELD TYPE RECTANGULAR RACK AND PANEL

SEA CON®/Phoenix offers hermetically sealed, miniature, rack and panel style connectors for use in harsh environments and is also suitable for any operation where reliability and performance are critical. These units have successfully been tested for shock, humidity, salt spray and thermal shock.

SEA CON®/Phoenix engineers will custom design to your particular requirements. Please contact us with your specifications.

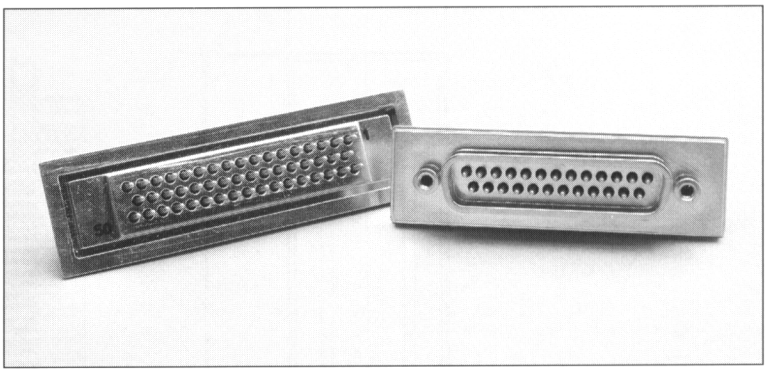

Materials

01 - *Shells*	S-S 304L Passivated
02 - *Contacts*	#20 Alloy 52-pin type per MIL-I-23011 Class 2
03 - *Insulation*	Compression-type glass
04 - *Plating*	Contact finish per MIL-C-24308

Hermeticity

Units successfully pass 1 x 10^{-8} cc/sec. when tested in accordance with MIL-STD 202, Method 112.

Pressure Rating/Hydro

Units successfully tested to 8,000 psi.

Operating Temperature

700° F maximum.

Contact Resistance

60 Millivolts maximum initially and 70 millivolts after conditioning when tested at 5 amperes.

Torque/Pull Out

Minimum torque force of 5 pound/inch without failure or degradation. Units have passed First Article inspection criteria performed by the government. This included shock, humidity, salt spray, and thermal shock in accordance with MIL-C-24308.

RECEPTACLE, RECTANGULAR, GLASS SEALED D-SUBMINIATURE

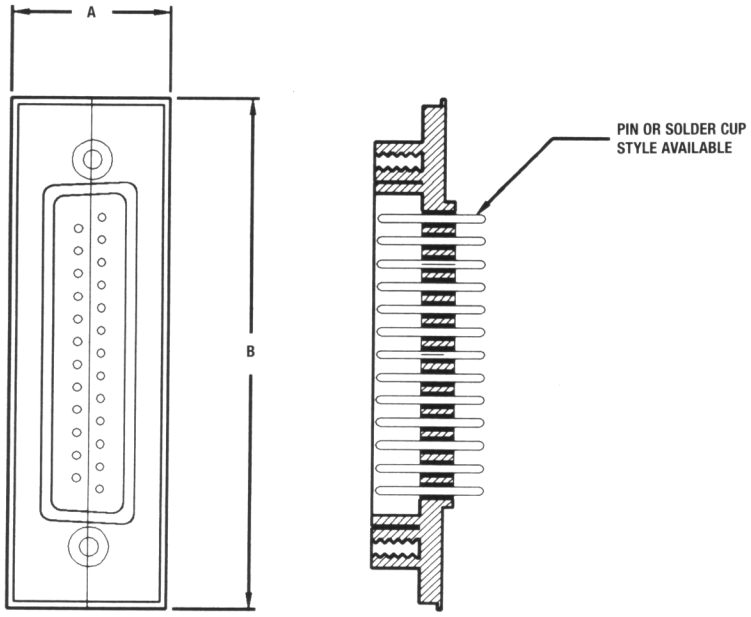

25 contact style shown for illustration only. Please call with your contact requirements.

SEA CON®/PHOENIX PART NUMBER	"A" DIM	"B" DIM	NUMBER OF PINS
CR1500-1	.740	2.445	25 EA. #20
CR1500-2	.850	2.900	50 EA. #20

ORDERING DATA:

C R 1 5 0 0 - X - X

- First X: Basic Size
- Second X: Termination: P = Pin, S = Solder Cup

GLASS SEALED CONNECTORS FOR SPECIALIZED APPLICATIONS

SEA CON®/Phoenix manufactures a wide variety of custom glass to metal seals for many diverse applications. Connectors for subsea, aerospace, rapid transit systems and the nuclear industry along with component parts such as coaxial contacts are the mainstay of our product list.

Single contact or multi-pin penetrators and connectors are all designed and manufactured to meet the strictest helium, electrical and hydrostatic test parameters.

Careful selection of materials such as stainless steel, cold roll steel, Monel™ and Inconel™, all of which are nickel and gold plated to resist corrosion and increase conductivity are then sealed using compression or matched glasses to meet the most intricate and demanding requirements.

Calibrated furnace profiles along with tightly controlled atmospheric conditions allows SEA CON®/Phoenix to manufacture long life quality custom seals at reasonable prices. SEA CON®/Phoenix engineers will custom design to your particular requirements. Please contact us with your specifications.

Materials

Body: Stainless Steel, Cold Roll Steel, Monel™, Inconel™.



Plating

Gold, Nickel.

Hermeticity

Units successfully pass 1 x 10^{-9} cc/sec. Helium Leak Rate.

Pressure Rating

Units successfully tested up to 20,000 psi.

High Potential

500 VAC applied between any two adjacent contacts or between shell and any contact, for a duration of one minute.

Insulation Resistance

5,000 Megohms or greater when measured between any pair of contacts and between contacts and shell using 500 VDC.

GLASS-SEAL ASSEMBLY DRAWING GSA1362

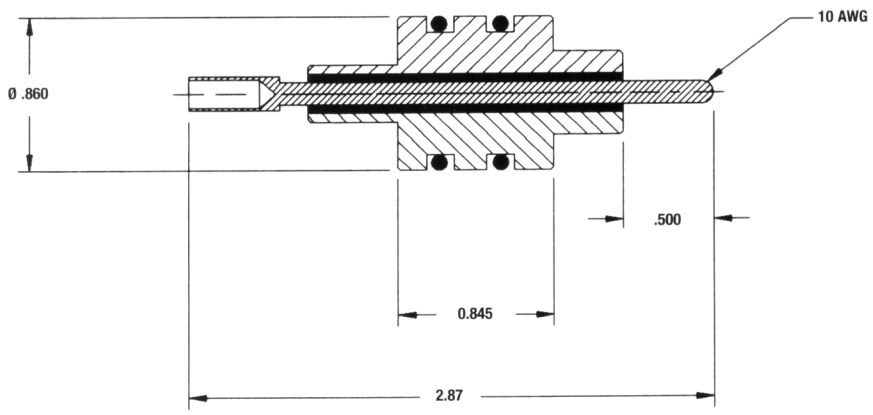

Other pin configurations available upon request.

Material:
Body: 316L SS.
Contact: Alloy 52.

Plating:
Silver Plate Pin Contact 0.00025 Minimum.

Pressure Rating:
Units successfully tested to 3,000 PSI.

Temperature Rating:
200° C.

High Potential:
500 VAC applied between any two adjacent contacts or between shell and any contact, for a duration of one minute.

Insulation Resistance:
500 Megohms or greater when measured between any pair of contacts and between contacts and shell using 500 VDC.

GLASS-SEAL ASSEMBLY
DRAWING GSA1381

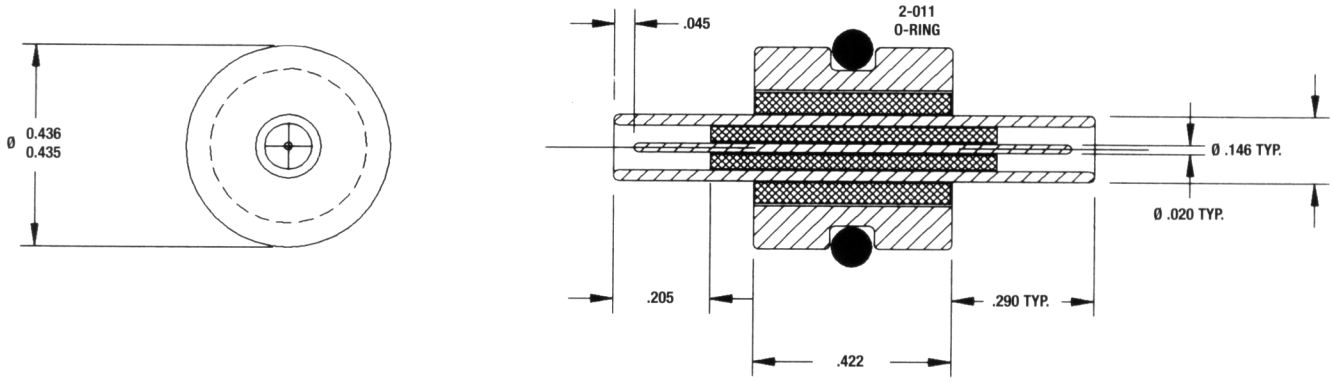

Other pin configurations available upon request.

Material:
Body: 316L SS.
Contacts: Alloy 52.

Plating:
Gold Plate Pins .000050 Inch Minimum Over Nickel.

Pressure Rating:
Units successfully tested to 20,000 PSI.

Temperature Rating:
200° C.

High Potential:
200 VDC applied between any two adjacent contacts or between shell and any contact, for a duration of one minute.

Insulation Resistance:
500 Megohm or greater when measured between any pair of contacts and between contacts and shell using 200 VDC.

GLASS-SEAL ASSEMBLY DRAWING GSA1473

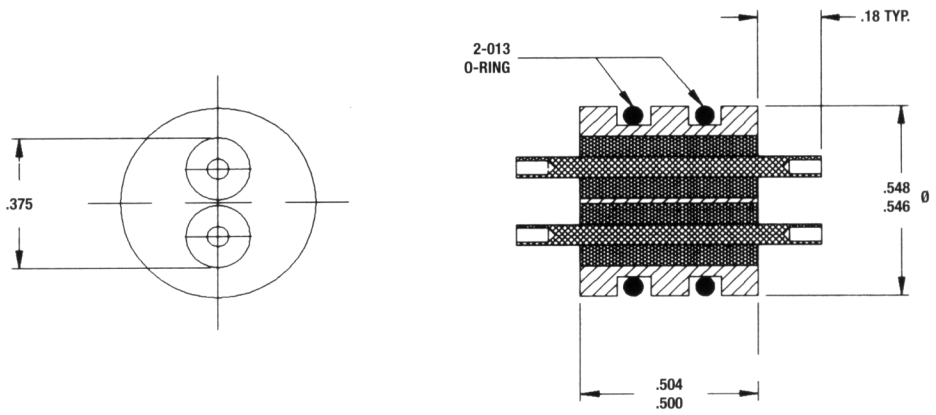

Other pin configurations available upon request.

Material:
Body: 316 SS.
Contacts: Alloy 52.

Plating:
Gold Plate Pins .000050.

Pressure Rating:
Units successfully tested to 5,000 PSI.

Temperature Rating:
0° C - 80° C.

High Potential:
250 VAC applied between any two adjacent contacts or between shell and any contact, for a duration of one minute.

Insulation Resistance:
500 Megohm or greater when measured between any pair of contacts and between contacts and shell using 500 VDC.

GLASS-SEAL ASSEMBLY DRAWING GSA1158

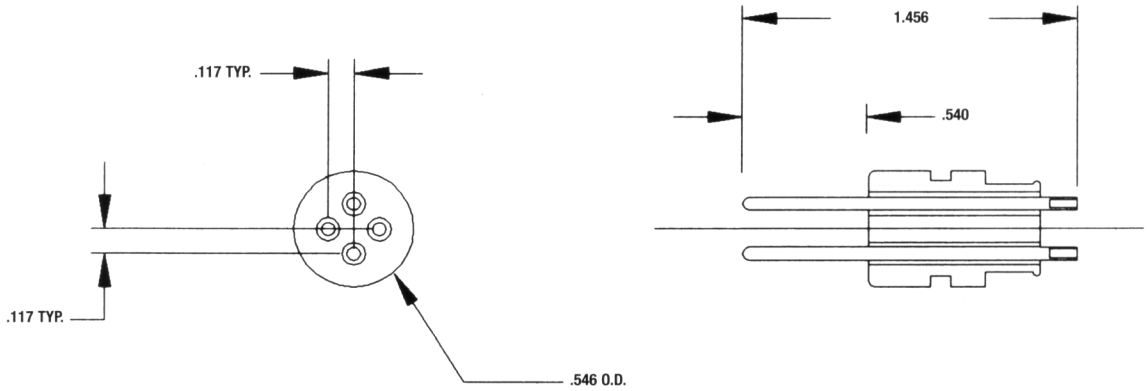

Other pin configurations available upon request.

Material:
Body: 316L SS.
Contacts: Alloy 52.

Plating:
Gold Plate Pins Per MIL-G-45204 Type II, .00020 Thick.

Pressure Rating:
Units successfully tested to 15,000 PSI.

Temperature Rating:
260° C.

High Potential:
500 VAC applied between any two adjacent contacts or between shell and any contact, for a duration of one minute.

Insulation Resistance:
1,000 Megohms or greater when measured between any pair of contacts and between contacts and shell using 500 VDC.

GLASS-SEAL ASSEMBLY DRAWING GSA1163

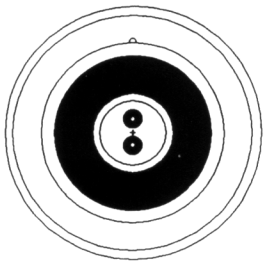

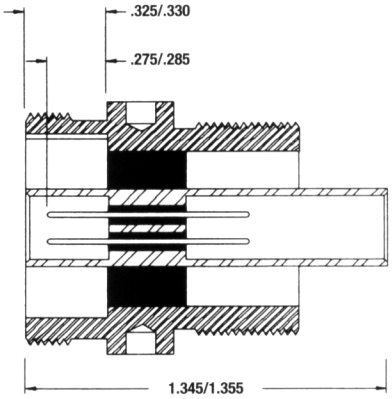

Other pin configurations available upon request.

Material:
Body: 316L SS.
Contacts: Alloy 52.

Plating:
Gold Plate Pins and Outer Contact .000050 Minimum Over Nickel.

Pressure Rating:
Units successfully tested to 1,000 PSI.

Temperature Rating:
200° C.

High Potential:
500 VAC applied between any two adjacent contacts or between shell and any contact, for a duration of one minute.

Insulation Resistance:
500 Megohms or greater when measured between any pair of contacts and between contacts and shell using 500 VDC.

GLASS SEALED TERMINALS FOR BATTERY APPLICATIONS

SEA CON®/Phoenix offers a wide range of glass to metal sealed terminals suitable for most long cell life applications especially lithium/sulfur dioxide and lithium thionyl chloride. Stainless steel and nickel plated cold roll steel are typical materials for circular or prismatic cell types. Terminal materials of Alloy 52, molybdenum or stainless steel are carefully selected depending on the battery application.

All terminals can be tested in-house for environmental conformity and helium leak inspected. The cell top assemblies have successfully passed a helium leak rate of 1 x 10^{-9} along with hydrostatic pressure requirements.

SEA CON®/Phoenix can build exactly to your specifications or offer a complete design and manufacturing service. Three atmospheric furnaces and in-house fixture manufacturing capabilities allow for quick turn around times for both large and small runs. Our battery terminals and carefully selected sealing processes have proven successful for our customers whenever shock, vibration, radical temperature extremes or pressure have been a problem.



Look for our feed thrus and battery covers when your cell applications are used in ocean depths, down hole or the upper reaches of the atmosphere.

Typical Materials

Cell Top: Stainless Steel, Nickel Plated Cold Roll Steel.
Terminal: Alloy 52, Molybdenum, Stainless Steel.

Hermeticity

Units successfully pass 1 x 10^{-9} cc/sec. Helium Leak Rate.

PART NUMBER SYSTEM

Example:

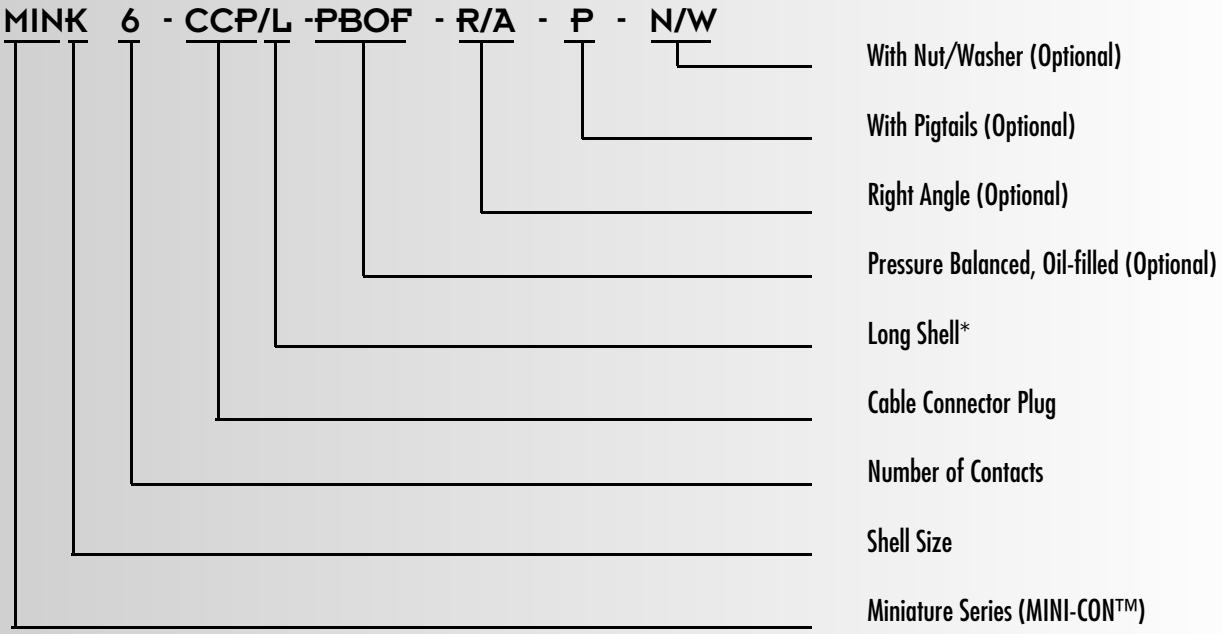

BCR	Bulkhead Connector Receptacle
FCR	Flange Connector Receptacle
CCR	Cable Connector Receptacle
CCP	Cable Connector Plug
FI	Field Installable
CIR	Connector Insert Receptacle (male insert only, fits into BCR/CCR/FCR shell)
CIP	Connector Insert Plug (female insert only, fits into CCP shell)
DSR	Dummy Sealing Receptacle
DSP	Dummy Sealing Plug
PSR	Plastic Splashproof Receptacle
PSP	Plastic Splashproof Plug

*WHAT THE 'L' IN THE PART MEANS

Basically, the MINI-CON™ connectors are made in two different lengths which we refer to as Regular (or standard), and Long. The long lengths are always necessary when the electrical insert for that given connector contains one or more contacts which are #16 AWG or larger, coaxial or Fiber Optic channels. If the electrical insert contains contacts which are all smaller than #16 AWG, the Regular length connector shell is utilized. The part numbers ending in "L", denote long shells.

When mating connectors, use only those with the same style, length and pin configurations.

EXPLODED VIEW

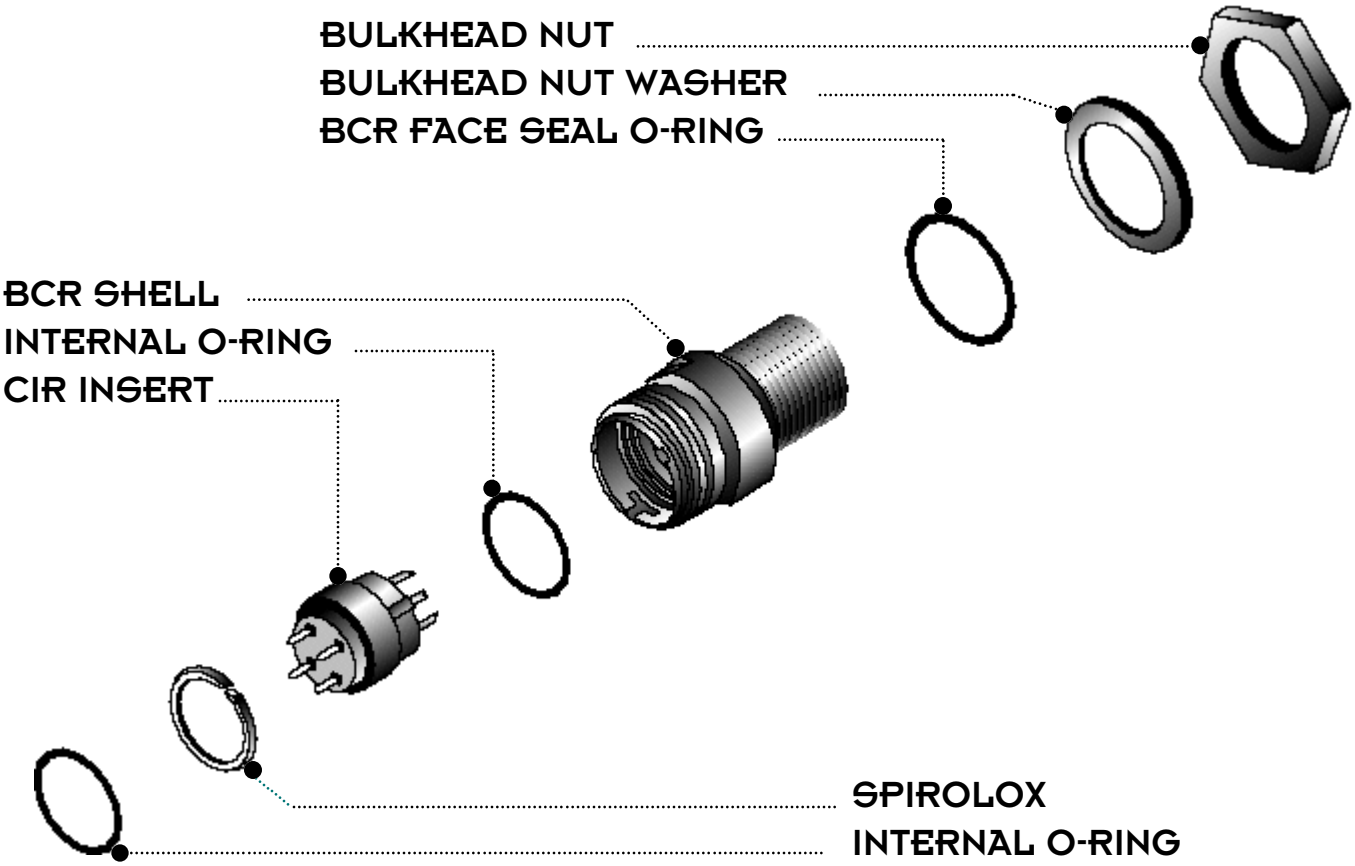







SEA CON AC

EXPLODED VIEW

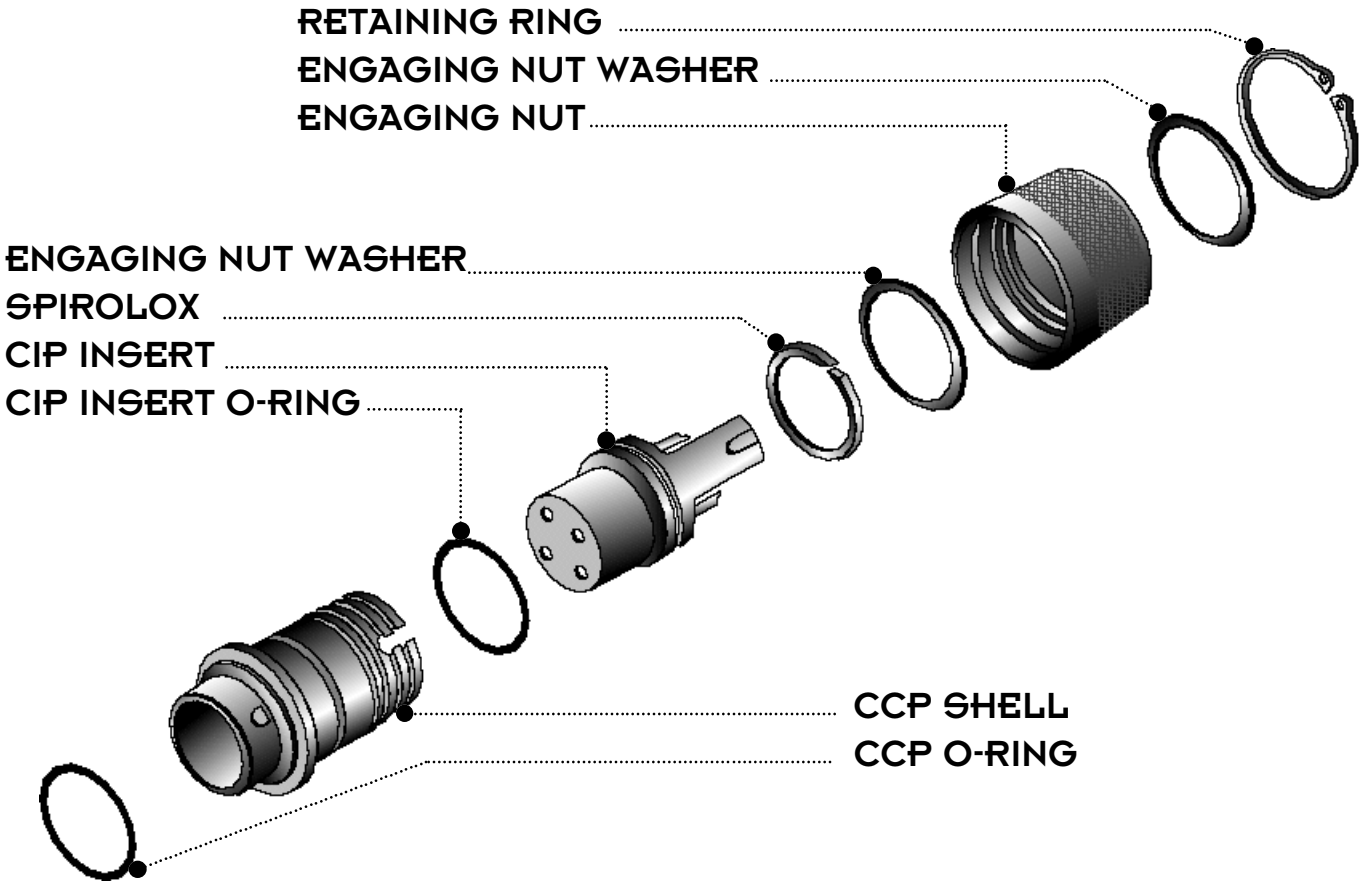

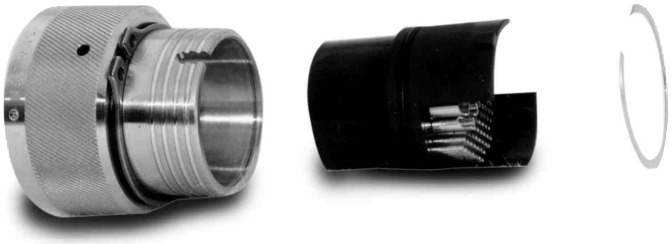





BULKHEAD CONNECTOR RECEPTACLE (BCR)

BCR (MATES TO CCP)

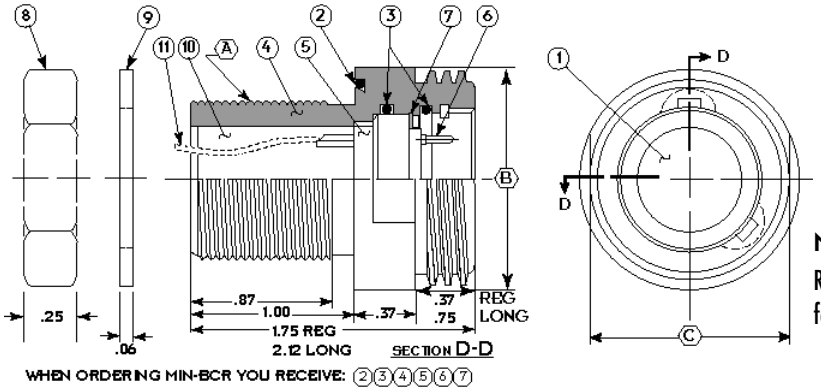

NOTE:
Reference pages 30-26 – 30-29 for pattern availability.

PART	(A) THREAD	(B) INCHES	(2) O-RING	(7) SPIROLOX	(3) O-RING	(C) INCHES	(8) HEX NUT ACROSS FLATS INCHES	(8) HEX NUT ACROSS POINTS INCHES	(9) WASHER OD INCHES
MING-BCR	5/8-24 UNEF-2A	1.00	2-018	UR50	2-014	0.87	0.88	1.00	0.88
MINK-BCR	3/4-20 UNEF-2A	1.12	2-019	UR62	2-016	1.00	1.00	1.16	1.00
MINL-BCR	7/8-20 UNEF-2A	1.25	2-021	UR75	2-018	1.12	1.13	1.31	1.13
MINM-BCR	1-20 UNEF-2A	1.37	2-023	UR81	2-019	1.25	1.25	1.44	1.25
MINO-BCR	1 1/8-16 UN-2A	1.62	2-026	UR106	2-023	1.50	1.50	1.75	1.50
MINP-BCR	1 1/4-16 UN-2A	1.75	2-028	UR118	2-025	1.62	1.63	1.88	1.63
MINQ-BCR	1 3/8-16 UN-2A	1.87	2-029	UR137	2-028	1.75	1.75	2.00	1.75
MINR-BCR	1 1/2 -16 UN-2A	2.00	2-029	UR150	2-029	1.87	1.88	2.16	1.88
MINT-BCR	1 1/2-16 UN-2A	2.50	2-034	UR175	2-031	2.37	2.38	2.75	2.38
MINU-BCR	2 1/4-16 UN-2A	2.75	2-036	UR200	2-033	2.62	2.63	3.03	2.63
MINX-BCR	2 3/4-16 UN-2A	3.50	2-041	UR250	2-037	3.15	3.16	3.63	3.16

BCR MOUNTING REQUIREMENTS

SIZE	BORE Ø +0.015″ - 0.000″
G	0.625″
K	0.750″
L	0.875″
M	1.000″
O	1.125″
P	1.250″
Q	1.375″
R	1.500″
T	2.000″
U	2.250″
X	2.750″

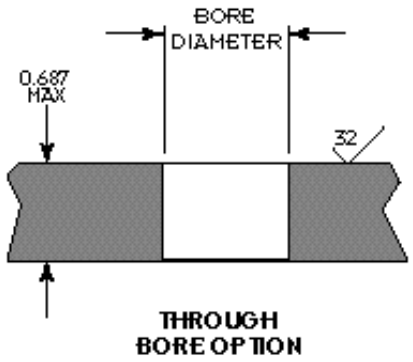

THROUGH BORE OPTION

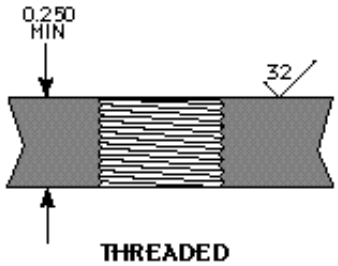

THREADED MOUNTING OPTION

NOTES:

1. Bore must be perpendicular to spot face.
2. Spotface diameter to be equal or greater than the connector diameter.
3. If threaded mount is used, lead thread chamfer is not to exceed diameter shown in bore column.

FLANGED CONNECTOR RECEPTACLE (FCR)

FCR (MATES TO CCP)

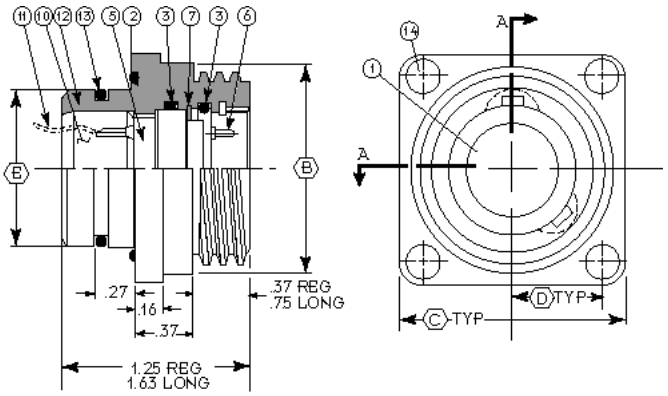

NOTE:
Reference pages 30-26 – 30-29 for pattern availability.

WHEN ORDERING A MIN-FCR YOU RECEIVE: ②③⑤⑥⑦⑫⑬

PART NAME	(B) INCHES	(C) INCHES	(D) INCHES	(E) INCHES	MOUNTING HOLE DIAMETER*	(13) O-RING	(7) SPIROLOX	(2) O-RING	(14) SOCKET HEAD CAPSCREW	(3) O-RING
MING-FCR	1.00	1.12	0.453	0.685	0.689/0.687	2-015	UR50	2-018	4-40 UNC-2A	2-014
MINK-FCR	1.12	1.25	0.510	0.748	0.752/0.750	2-016	UR62	2-019	6-32 UNC-2A	2-016
MINL-FCR	1.25	1.37	0.562	0.873	0.877/0.875	2-018	UR75	2-021	6-32 UNC-2A	2-018
MINM-FCR	1.37	1.50	0.593	0.998	1.002/1.000	2-020	UR81	2-023	8-32 UNC-2A	2-019
MINO-FCR	1.62	1.75	0.723	1.123	1.127/1.125	2-022	UR106	2-026	8-32 UNC-2A	2-023
MINP-FCR	1.75	1.87	0.777	1.248	1.252/1.250	2-024	UR118	2-028	8-32 UNC-2A	2-025
MINQ-FCR	1.87	2.00	0.831	1.373	1.377/1.375	2-026	UR137	2-029	10-24 UNC-2A	2-028
MINR-FCR	2.00	2.12	0.884	1.498	1.502/1.500	2-028	UR150	2-029	10-24 UNC-2A	2-029
MINT-FCR	2.50	2.62	1.043	1.998	2.002/2.000	2-032	UR175	2-034	1/4-20 UNC-2A	2-031
MINU-FCR	2.75	2.87	1.130	2.248	2.252/2.250	2-034	UR200	2-036	1/4-20 UNC-2A	2-033
MINX-FCR	3.50	3.62	1.470	2.748	2.752/2.750	2-038	UR250	2-041	3/8-16 UNC-2A	2-037

FCR MOUNTING REQUIREMENTS

SIZE	BORE Ø +0.002″ - 0.000″	CHAMFER Ø (± .010″)	*SPOTFACE Ø (± 0.015″)	**SPOTFACE Ø (± 0.015″)
G	0.687″	0.727″	1.00″	1.56″
K	0.750″	0.800″	1.12″	1.75″
L	0.875″	0.915″	1.25″	1.87″
M	1.000″	1.040″	1.31″	2.12″
O	1.125″	1.175″	1.50″	2.44″
P	1.250″	1.290″	1.62″	2.62″
Q	1.375″	1.425″	1.81″	2.81″
R	1.500″	1.540″	1.87″	3.00″
T	2.000″	2.050″	2.50″	3.75″
U	2.250″	2.290″	2.75″	4.00″
X	2.750″	2.800″	3.31″	5.06″

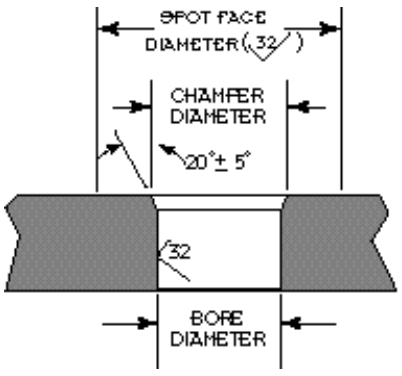

NOTE: CHAMFER IS TO BE 20° ± 5°

* This dimension is to be used if spotface is less than or equal to 0.001 inches deep.

**This dimension is to be used if spotface is greater than 0.001 inches deep.

BULKHEAD CONNECTOR RECEPTACLE

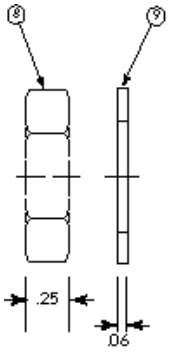

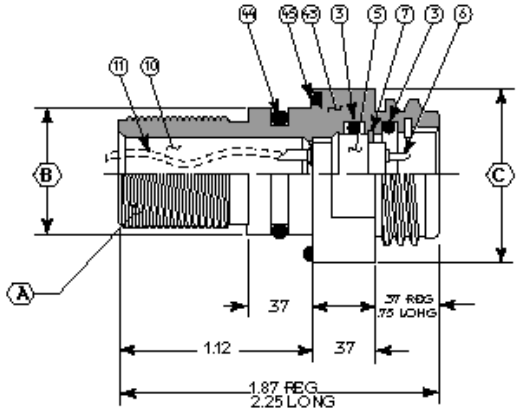

SECTION E-E

DUAL O RING (BCR-DO)

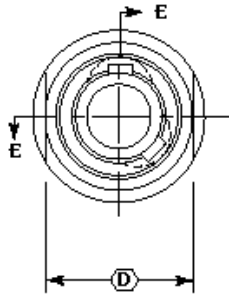

BCR-DO (MATES TO CCP)

WHEN ORDERING MIN-BCR-DO YOU RECEIVE: (2)(3)(5)(6)(7)(12)(43)(44)(45)

NOTE:
Reference pages 30-26 – 30-29 for pattern availability.

PART NAME	(A) THREAD	(B) INCHES	(C) INCHES	(D) INCHES	(44) O-RING	(45) O-RING	(3) O-RING	(7) SPIROLOX	(8) HEX NUT ACROSS FLATS INCHES	8 HEX NUT ACROSS POINTS INCHES	9 WASHER OD INCHES
MING-BCR	5/8-24 UNEF-2A	0.685	1.06	0.93	2-015	2-019	2-014	UR50	0.87	1.00	0.88
MINK-BCR	3/4-20 UNEF-2A	0.810	1.18	1.06	2-017	2-020	2-016	UR62	1.00	1.16	1.00
MINL-BCR	7/8-20 UNEF-2A	0.935	1.31	1.18	2-019	2-022	2-018	UR75	1.12	1.31	1.13
MINM-BCR	1-20 UNEF-2A	1.060	1.43	1.31	2-021	2-024	2-019	UR81	1.25	1.44	1.25
MINO-BCR	1 1/8-16 UN-2A	1.185	1.68	1.56	2-023	2-027	2-023	UR106	1.50	1.75	1.50
MINP-BCR	1 1/4-16 UN-2A	1.310	1.81	1.68	2-025	2-029	2-025	UR118	1.62	1.88	1.63
MINQ-BCR	1 3/8-16 UN-2A	1.435	1.93	1.81	2-027	2-030	2-028	UR137	1.75	2.00	1.75
MINR-BCR	1 1/2-16 UN-2A	1.623	2.06	1.93	2-029	2-031	2-029	UR150	1.87	2.16	1.88
MINT-BCR	2-16 UN-2A	2.123	2.62	2.43	2-033	2-035	2-031	UR175	2.37	2.75	2.38
MINU-BCR	2 1/4-16 UN-2A	2.373	3.00	2.68	2-035	2-037	2-033	UR200	2.75	3.03	2.63
MINX-BCR	2 3/4-16 UN2A	2.873	3.62	3.22	2-039	2-041	2-037	UR250	3.25	3.63	3.16

The Bulkhead Connector Receptacle Dual O-ring (BCR-DO) is a recent addition to the MINI-CON™ line. It combines the ease of installation of the standard BCR with the added safety of the redundant seal found in the FCR.

BCR-DO MOUNTING REQUIREMENTS

SIZE	BORE Ø + .002″ - .000″	CHAMFER O ± .010″
G	0.687″	0.737″
K	0.812″	0.862″
L	0.937″	0.987″
M	1.062″	1.112″
O	1.187″	1.237″
P	1.312″	1.362″
Q	1.437″	1.487″
R	1.625″	1.675″
T	2.125″	2.175″
U	2.375″	2.425″
X	2.875″	2.925″

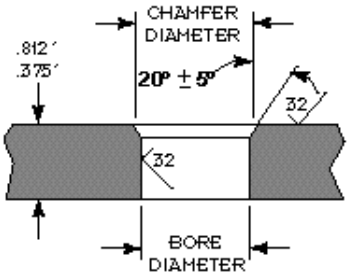

THROUGH BORE OPTION

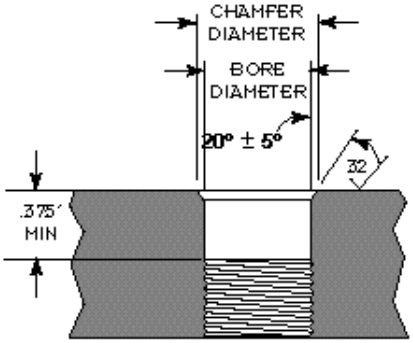

THREADED MOUNTING OPTION

NOTES:
1. Bore must be perpendicular to spot face.
2. Spotface diameter to be equal to greater than the connector diameter.
3. If threaded mount is used, thread must be concentric with bore.

CABLE CONNECTOR RECEPTACLE (CCR)

CCR (MATES TO CCP)

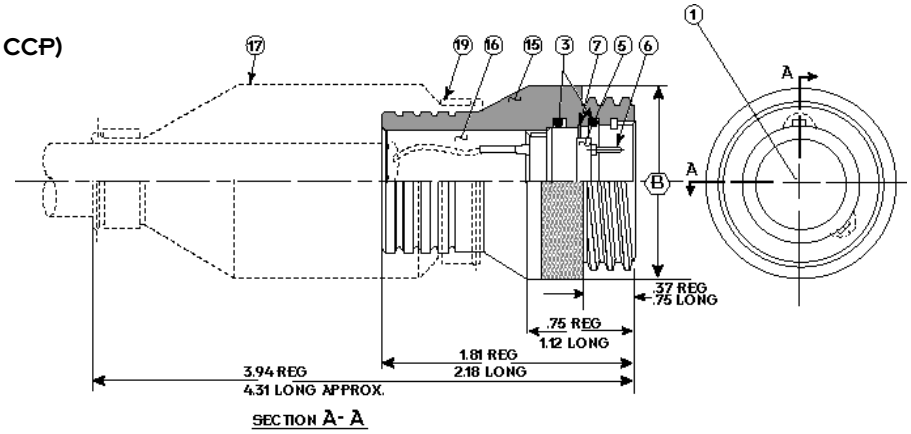

WHEN ORDERING A MIN-CCR YOU RECEIVE: ③⑤⑥⑦⑮

NOTE:
Reference pages 30-26 – 30-29 for pattern availability.

PART NAME	Ⓑ INCHES	⑦ SPIROLOX	③ O - RING
MING-CCR	1.00	UR50	2-014
MINK-CCR	1.12	UR62	2-016
MINL-CCR	1.25	UR75	2-018
MINM-CCR	1.37	UR81	2-019
MINO-CCR	1.62	UR106	2-023
MINP-CCR	1.75	UR118	2-025
MINQ-CCR	1.87	UR137	2-028
MINR-CCR	2.00	UR150	2-029
MINT-CCR	2.50	UR175	2-031
MINU-CCR	2.75	UR200	2-033
MINX-CCR	3.50	UR250	2-037

CABLE CONNECTOR PLUG (CCP)

CCP (MATES TO BCR/FCR/CCR)

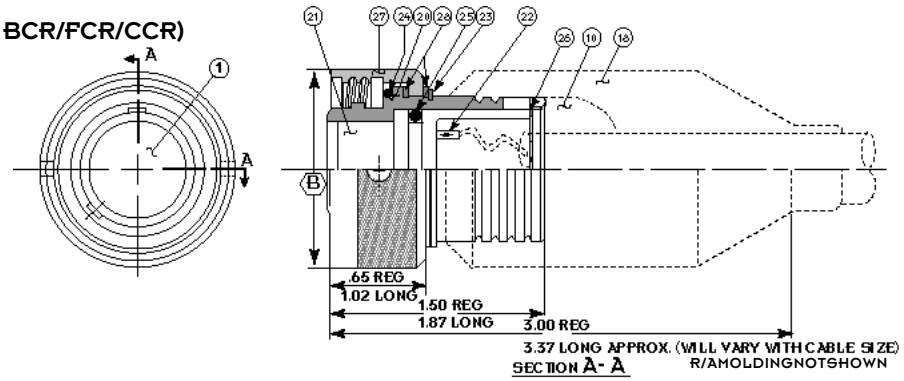

WHEN ORDERING MIN-BCR YOU RECEIVE: ⑳㉑㉒㉓㉔㉕㉖㉗㉘

NOTE:
Reference pages 30-26 – 30-29 for pattern availability.

PART NAME	Ⓑ INCHES	㉔ O-RING	㉓ RETAINING RING	㉕ O-RING	㉖ SPIROLOX	R/A HEIGHT INCHES
MING-CCP	1.00	2-015	5100-68	2-013	UR56	2.63/3.00
MINK-CCP	1.12	2-017	5100-78	2-015	UR68	2.63/3.00
MINL-CCP	1.25	2-019	5100-87	2-016	UR75	2.63/3.00
MINM-CCP	1.37	2-020	5100-100	2-018	UR87	2.81/3.18
MINO-CCP	1.62	2-024	5100-118	2-020	UR100	2.81/3.18
MINP-CCP	1.75	2-027	5100-131	2-022	UR112	3.00/3.37
MINQ-CCP	1.87	2-028	5100-150	2-025	UR131	3.00/3.37
MINR-CCP	2.00	2-029	5100-156	2-026	UR137	3.19/3.56
MINT-CCP	2.50	2-032	5100-187	2-029	UR162	varies w/cable
MINU-CCP	2.75	2-033	5100-206	2-023	UR187	varies w/cable
MINX-CCP	3.50	2-038	5100-268	2-033	UR212	varies w/cable

DUMMY SEALING RECEPTACLE (DSR)

DSR (MATES TO CCP)
DSRL (MATES TO CCPL)

PART NAME	(B) INCHES	(3) O-RING
MING-DSR (DSRL)	1.00	2-014
MINK-DSR (DSRL)	1.12	2-016
MINL-DSR (DSRL)	1.25	2-018
MINM-DSR (DSRL)	1.37	2-019
MINO-DSR (DSRL)	1.62	2-023
MINP-DSR (DSRL)	1.75	2-025
MINQ-DSR (DSRL)	1.87	2-028
MINR-DSR (DSRL)	2.00	2-029
MINT-DSR (DSRL)	2.50	2-031
MINU-DSR (DSRL)	2.75	2-033
MINX-DSR (DSRL)	3.50	2-037

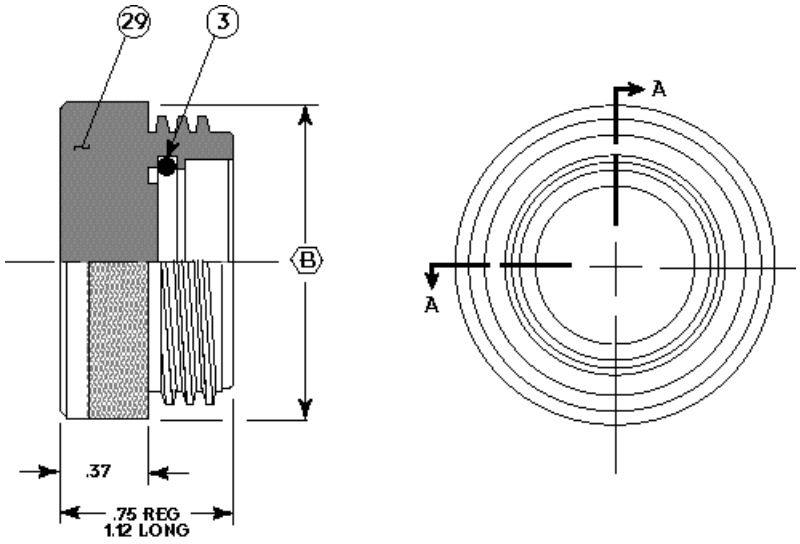

SECTION A- A

WHEN ORDERING MIN-DSR YOU RECEIVE: (3)(29)

WHEN ORDERING MIN-DSRL YOU RECEIVE: (3)(30)

DUMMY SEALING PLUG (DSP)

DSP (MATES TO BCR/FCR/CCR)
DSPL (MATES TO BCRL/FCRL/CCRL)

PART NAME	(B) INCHES	(F) INCHES	(24) O-RING	(23) RETAINING RING
MING-DSP (DSPL)	1.00	0.69	2-015	5100-68
MINK-DSP (DSPL)	1.12	0.78	2-017	5100-78
MINL-DSP (DSPL)	1.25	0.87	2-019	5100-87
MINM-DSP (DSPL)	1.37	1.00	2-020	5100-100
MINO-DSP(DSPL)	1.62	1.18	2-024	5100-118
MINP-DSP (DSPL)	1.75	1.31	2-027	5100-131
MINQ-DSP(DSPL)	1.87	1.50	2-028	5100-150
MINR-DSP (DSPL)	2.00	1.56	2-029	5100-156
MINT-DSP (DSPL)	2.50	1.87	2-032	5100-187
MINU-DSP(DSPL)	2.75	2.06	2-033	5100-206
MINX-DSP (DSPL)	3.50	2.68	2-038	5100-268

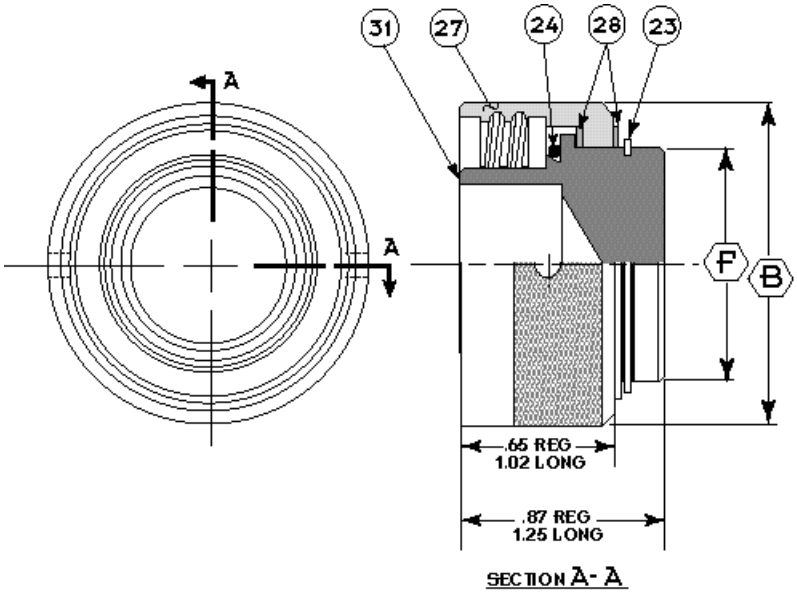

SECTION A- A

WHEN ORDERING MING-DSP YOU RECEIVE: (23)(24)(27)(28)(31)

WHEN ORDERING MING-DSPL YOU RECEIVE: (23)(24)(27)(28)(32)

PLASTIC SPLASHPROOF RECEPTACLE (PSR)

PSR (MATES TO CCP)
PSRL (MATES TO CCPL)

PART NAME	(B) INCHES
MING-PSR (PSRL)	1.00
MINK-PSR (PSRL)	1.12
MINL-PSR (PSRL)	1.25
MINM-PSR (PSRL)	1.37
MINO-PSR (PSRL)	1.62
MINP-PSR (PSRL)	1.75
MINQ-PSR (PSRL)	1.87
MINR-PSR (PSRL)	2.00
MINT-PSR (PSRL)	2.50
MINU-PSR (PSRL)	2.75
MINX-PSR (PSRL)	3.50

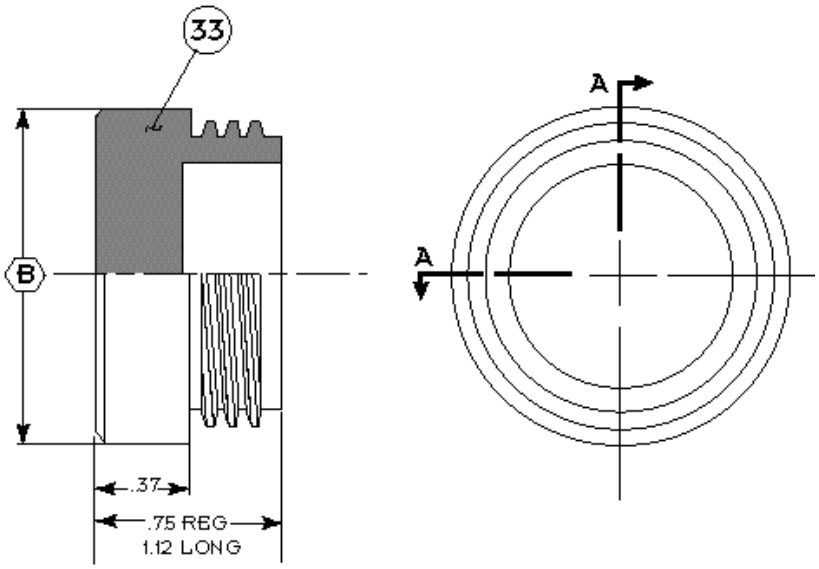

SECTION A- A

WHEN ORDERING MIN-PSR YOU RECEIVE: (33)

WHEN ORDERING MIN-PSRL YOU RECEIVE: (34)

PLASTIC SPLASHPROOF PLUG (PSP)

PSP (MATES TO BCR/FCR/CCR)
PSPL (MATES TO BCR/FCRL/CCRL)

PART NAME	(G) INCHES	(24) O-RING
MING-PSP (PSPL)	1.06	2-015
MINK-PSP (PSPL)	1.20	2-017
MINL-PSP (PSPL)	1.31	2-019
MINM-PSP (PSPL)	1.44	2-020
MINO-PSP (PSPL)	1.68	2-024
MINP-PSP (PSPL)	1.81	2-027
MINQ-PSP (PSPL)	1.94	2-028
MINR-PSP (PSPL)	2.12	2-029
MINT-PSP (PSPL)	2.62	2-032
MINU-PSP (PSPL)	2.87	2-033
MINX-PSP (PSPL)	3.62	2-038

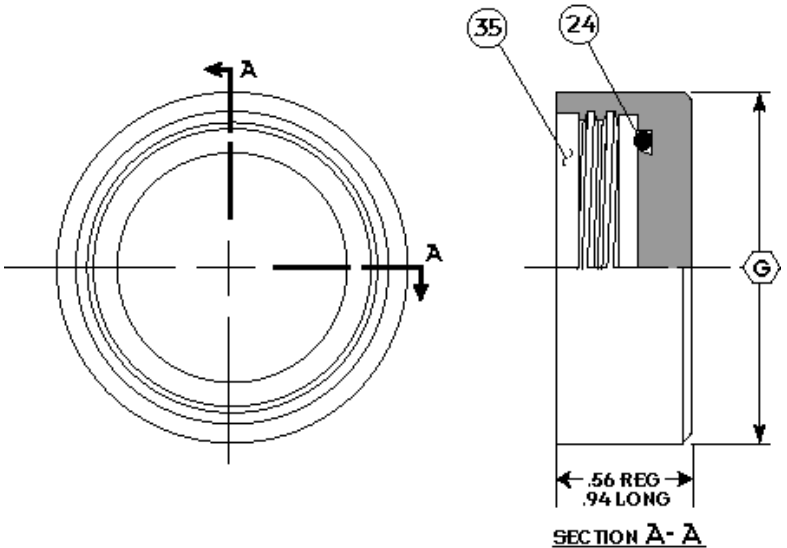

SECTION A- A

WHEN ORDERING MIN-PSP OR MIN-PSPL YOU RECEIVE: (24)(35)

PRESSURE RATINGS

All MINI-CON™ connectors and dummies, when mated, are pressure rated as follows:
These pressure ratings are for our standard 316 stainless steel connectors. Higher ratings may be achieved with alternate materials. Please call factory for further information

SIZE	NON-PBOF	PBOF
G through O	7500 PSI	3000 PSI
P through R	5000 PSI	2000 PSI
T through U	3000 PSI	1500 PSI
X	2500 PSI	1000 PSI

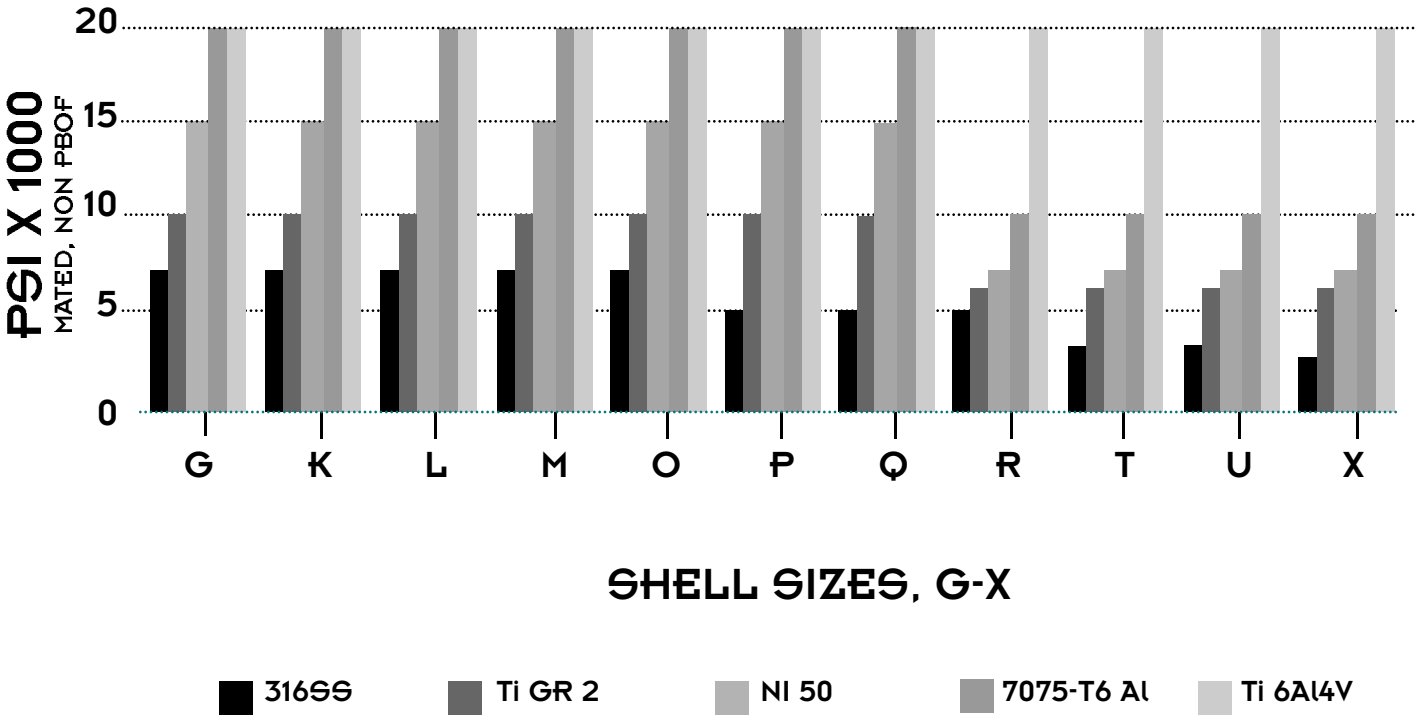

VOLTAGE RATINGS

600 VDC is standard; many of the above can handle higher voltage rating. Please contact factory for specific voltage ratings.

ESTIMATED WEIGHT OF MINI-CON™ CONNECTORS IN AIR

The following tables contain all the information to estimate the weight of a MINI-CON™ connector. The estimated weight of the standard shells may be found in Tables 1, 2, 3, 4, 5, 7, and 8. These tables contain the weight in four base metals; 316 Stainless Steel, Nitronic 50, 7075-T6 Aluminum, or Titanium (Grade 2 and 6A1 4V are approximately equal). The electrical insert weight may be found in Table 6.

In order to estimate the weight of the connector find the estimated weight for the insert in Table 6 and add it to the corresponding shell size estimated weight in Table 1, 2, 3, 4 or 5. The DSR and DSP do not use inserts.

Example: shell weight + insert weight = total weight of connector

NOTE: THE CIR WILL BE INSTALLED INTO THE BCR/FCR/CCR
THE CIP WILL BE INSTALLED INTO THE CCP OR CCP PBOF

TABLE 1

Shows the estimated weight of the BCR shells, both the standard and the long. Be sure to select the correct shell size, length, and material when reading the table.

MINI-CON™ BULKHEAD RECEPTACLE CONNECTORS (BCR) ESTIMATED WEIGHT IN AIR

	EQUIVALENT VOLUME(CU IN)		316 SST (POUNDS)		NI 50 (POUNDS)		TITANIUM (POUNDS)		7075-T6 (POUNDS)	
SIZE	STD	LONG	STD	LONG	STD	LONG	STD	LONG	STD	LONG
G-BCR	0.378	0.491	0.110	0.142	0.108	0.140	0.060	0.079	0.038	0.050
K-BCR	0.457	0.578	0.133	0.168	0.130	0.165	0.073	0.092	0.046	0.058
L-BCR	0.562	0.678	0.163	0.197	0.160	0.193	0.090	0.108	0.057	0.068
M-BCR	0.767	0.940	0.222	0.273	0.219	0.268	0.123	0.150	0.077	0.095
O-BCR	0.826	1.079	0.240	0.313	0.235	0.308	0.132	0.173	0.083	0.109
P-BCR	0.928	1.210	0.269	0.351	0.264	0.345	0.148	0.194	0.094	0.122
Q-BCR	0.905	1.188	0.262	0.345	0.258	0.339	0.145	0.190	0.091	0.120
R-BCR	1.034	1.293	0.300	0.375	0.295	0.369	0.165	0.207	0.104	0.131

TABLE 2

Shows the estimated weight of the FCR shells, both the standard and the long. Be sure to select the correct shell size, length, and material when reading the table.

MINI-CON™ FLANGE MOUNTED RECEPTACLE (FCR) ESTIMATED WEIGHT IN AIR

	EQUIVALENT VOLUME (CU IN)		316 SST (POUNDS)		NI 50 (POUNDS)		TITANIUM (POUNDS)		7075-T6 (POUNDS)	
SIZE	STD	LONG	STD	LONG	STD	LONG	STD	LONG	STD	LONG
G-FCR	0.436	0.550	0.126	0.160	0.124	0.157	0.070	0.088	0.044	0.056
K-FCR	0.488	0.614	0.142	0.178	0.139	0.175	0.078	0.098	0.049	0.062
L-FCR	0.588	0.757	0.171	0.220	0.168	0.216	0.094	0.121	0.059	0.076
M-FCR	0.753	0.966	0.218	0.280	0.215	0.275	0.120	0.155	0.076	0.098
O-FCR	0.898	1.169	0.260	0.339	0.256	0.333	0.144	0.187	0.091	0.118
P-FCR	0.991	1.284	0.287	0.372	0.282	0.366	0.159	0.205	0.100	0.130
Q-FCR	1.069	1.279	0.310	0.371	0.305	0.365	0.171	0.205	0.108	0.129
R-FCR	1.147	1.384	0.333	0.401	0.327	0.394	0.184	0.221	0.116	0.140

ESTIMATED WEIGHT OF MINI-CON™ CONNECTORS IN AIR

TABLE 3

Shows the estimated weight of the CCR shell, both the standard and the long. Be sure to select the correct shell size, length, and material when reading the table.

MINI-CON™ CABLE CONNECTORS RECEPTACLE (CCR)
ESTIMATED WEIGHT IN AIR

	EQUIVALENT VOLUME(CU IN)		316 SST (POUNDS)		NI 50 (POUNDS)		TITANIUM (POUNDS)		7075-T6 (POUNDS)	
SIZE	STD	LONG	STD	LONG	STD	LONG	STD	LONG	STD	LONG
G-CCR	0.560	0.664	0.162	0.193	0.160	0.189	0.090	0.106	0.057	0.067
K-CCR	0.621	0.767	0.180	0.222	0.177	0.219	0.099	0.123	0.063	0.077
L-CCR	0.743	0.926	0.215	0.269	0.212	0.264	0.119	0.148	0.075	0.094
M-CCR	0.948	1.133	0.275	0.329	0.270	0.323	0.152	0.181	0.096	0.114
O-CCR	1.245	1.479	0.361	0.429	0.355	0.422	0.199	0.237	0.126	0.149
P-CCR	1.379	1.617	0.400	0.469	0.393	0.461	0.221	0.259	0.139	0.163
Q-CCR	1.459	1.690	0.423	0.490	0.416	0.482	0.233	0.270	0.147	0.171
R-CCR	1.492	1.778	0.433	0.516	0.425	0.507	0.239	0.284	0.151	0.180

TABLE 4

Shows the estimated weight of the CCP shells, both the standard and the long. Be sure to select the correct shell size, length, and material when reading the table.

MINI-CON™ CABLE PLUGS (CCP)
ESTIMATED WEIGHT IN AIR
(Including Engaging Nut in Material Indicated)

Shell Material	Engaging Nut Material
316 SST	CA 630
NI 50	NI 60
Titanium	Titanium
7075-T6	7075-T6

	EQUIVALENT VOLUME(CU IN)		316 SST (POUNDS)		NI 50 (POUNDS)		TITANIUM (POUNDS)		7075-T6 (POUNDS)	
SIZE	STD	LONG	STD	LONG	STD	LONG	STD	LONG	STD	LONG
G-CCP	0.307	0.414	0.089	0.120	0.087	0.118	0.049	0.066	0.031	0.042
K-CCP	0.338	0.467	0.098	0.135	0.096	0.133	0.054	0.075	0.034	0.047
L-CCP	0.434	0.592	0.126	0.172	0.124	0.169	0.069	0.095	0.044	0.060
M-CCP	0.472	0.641	0.137	0.186	0.135	0.183	0.076	0.103	0.048	0.065
O-CCP	0.761	1.012	0.221	0.293	0.217	0.288	0.122	0.162	0.077	0.102
P-CCP	0.838	1.084	0.243	0.314	0.239	0.309	0.134	0.173	0.085	0.109
Q-CCP	0.916	1.153	0.266	0.334	0.261	0.329	0.147	0.184	0.093	0.116
R-CCP	1.055	1.391	0.306	0.403	0.301	0.396	0.169	0.223	0.107	0.140

MINI-CON™ PBOF CABLE PLUG (CCP-PBOF)
ESTIMATED WEIGHT IN AIR
(Including Engaging Nut in Material Indicated)

Shell Material	Engaging Nut Material
316 SST	CA 630
NI 50	NI 60
Titanium	Titanium
7075-T6	7075-T6

SIZE	SHELL STYLE	EQUIVALENT VOLUME (CU IN)		316 SST (POUNDS)		NI 50 (POUNDS)		TITANIUM (POUNDS)		7075-T6 (POUNDS)	
		STD	LONG	STD	LONG	STD	LONG	STD	LONG	STD	LONG
G-CCP	STR	1.143	1.260	0.331	0.365	0.326	0.359	0.183	0.202	0.115	0.127
	RA	1.210	1.330	0.351	0.386	0.345	0.379	0.194	0.213	0.122	0.134
	30 DEG	1.290	1.410	0.374	0.409	0.368	0.402	0.206	0.226	0.130	0.142
K-CCP	STR	0.929	1.030	0.269	0.299	0.265	0.294	0.149	0.165	0.094	0.104
	RA	1.000	1.100	0.290	0.319	0.285	0.314	0.160	0.176	0.101	0.111
	30 DEG	1.080	1.180	0.313	0.342	0.308	0.336	0.173	0.189	0.109	0.119
L-CCP	STR	1.350	1.460	0.392	0.423	0.385	0.416	0.216	0.234	0.136	0.147
	RA	1.420	1.530	0.412	0.444	0.405	0.436	0.227	0.245	0.143	0.155
	30 DEG	1.500	1.610	0.435	0.467	0.428	0.459	0.240	0.258	0.152	0.163
M-CCP	STR	1.520	1.690	0.441	0.490	0.433	0.482	0.243	0.270	0.154	0.171
	RA	1.590	1.760	0.461	0.510	0.453	0.502	0.254	0.282	0.161	0.178
	30 DEG	1.670	1.840	0.484	0.534	0.476	0.524	0.267	0.294	0.169	0.186
O-CCP	STR	2.079	2.260	0.603	0.655	0.593	0.644	0.333	0.362	0.210	0.228
	RA	2.150	2.320	0.623	0.673	0.613	0.661	0.344	0.371	0.217	0.234
	30 DEG	2.230	2.400	0.647	0.696	0.636	0.684	0.357	0.384	0.225	0.242
P-CCP	STR	2.670	2.900	0.774	0.841	0.761	0.826	0.427	0.464	0.270	0.293
	RA	2.740	2.970	0.795	0.861	0.781	0.846	0.438	0.475	0.277	0.300
	30 DEG	2.821	3.050	0.818	0.884	0.804	0.869	0.451	0.488	0.285	0.308
Q-CCP	STR	2.900	3.210	0.841	0.931	0.826	0.915	0.464	0.514	0.293	0.324
	RA	2.970	3.280	0.861	0.951	0.846	0.935	0.475	0.525	0.300	0.331
	30 DEG	3.050	3.360	0.884	0.974	0.869	0.958	0.488	0.538	0.308	0.339
R-CCP	STR	3.200	3.540	0.928	1.027	0.912	1.009	0.512	0.566	0.323	0.358
	RA	3.270	3.610	0.948	1.047	0.932	1.029	0.523	0.578	0.330	0.365
	30 DEG	3.350	3.690	0.971	1.070	0.955	1.052	0.536	0.590	0.338	0.373

TABLE 5

Shows the estimated weight of the CCP-PBOF shells, both the standard and the long. Be sure to select the correct shell size, length, and material when reading the table.

TABLE 6

Shows the estimated weight of the inserts which go into the shell listed in Tables 1 through 5. The inserts listed are examples for the given connector size and length (CIR/CIP or CIRL/CIPL). If the inserts you are looking for are not listed, estimate the weight by comparing the contact density to those shown in the table. Be sure to note whether the insert is a standard or long. If the insert has a #16 awg contact or larger, Fiber Optic, or Coax it will be a "long" insert.

MINI-CON™ INSERTS
ESTIMATED WEIGHT IN AIR
NOTE: STANDARD AND LONG EXAMPLES SHOWN

SIZE	CIR (POUNDS) STD	CIR (POUNDS) LONG	CIP (POUNDS) STD	CIP (POUNDS) LONG
MING-CIR/CIP				
3#22	0.005		0.011	
10#22	0.008		0.014	
MING-CIRL/CIPL				
3#16		0.009		0.029
MINK-CIR/CIP				
6#20	0.010		0.017	
19#22	0.014		0.022	
MINK-CIRL/CIPL				
4#16		0.013		0.031
2#14 / 8# 20		0.015		0.036
MINL-CIR/CIP				
12#22	0.014		0.023	
24#22	0.018		0.029	
MINM-CIR/CIP				
25#20	0.023		0.037	
37#22	0.026		0.040	
MINM-CIRL/CIPL				
3#14		0.018		0.045
3#16 / 21#22		0.026		0.054
MINO-CIR/CIP				
52#22	0.039		0.056	
56#22	0.041		0.057	
MINO-CIRL/CIPL				
4#14		0.028		0.065
8#14 / 13#20		0.041		0.097
MINP-CIR/CIP				
28#20 / 24#22	0.050		0.068	
76#22	0.054		0.075	
MINP-CIRL/CIPL				
25#16		0.060		0.134
MINQ-CIR/CIP				
90#22	0.067		0.096	
106#22	0.073		0.102	
MINQ-CIRL/CIPL				
3#14 / 2#16 / 13#22			0.048	
				0.112
MINR-CIR/CIP				
56#20	0.064		0.090	
131#22	0.089		0.119	
MINR-CIRL/CIPL				
20#16		0.068		0.153
4#10 / 6#16 / 74#22		0.088		0.176

MINI-CON™ DUMMY SEALING RECEPTACLE (DSR) ESTIMATED WEIGHT IN AIR

	EQUIVALENT VOLUME (CU IN)		316 SST (POUNDS)		NI 50 (POUNDS)		TITANIUM (POUNDS)	
SIZE	STD	LONG	STD	LONG	STD	LONG	STD	LONG
G-DSR	0.292	0.405	0.085	0.117	0.083	0.115	0.047	0.065
K-DSR	0.436	0.557	0.126	0.162	0.124	0.159	0.070	0.089
L-DSR	0.590	0.702	0.171	0.204	0.168	0.200	0.094	0.112
M-DSR	0.667	0.840	0.193	0.244	0.190	0.239	0.107	0.134
O-DSR	0.876	1.129	0.254	0.327	0.250	0.322	0.140	0.181
P-DSR	0.994	1.276	0.288	0.370	0.283	0.364	0.159	0.204
Q-DSR	1.067	1.350	0.309	0.392	0.304	0.385	0.171	0.216
R-DSR	1.175	1.434	0.341	0.416	0.335	0.409	0.188	0.229

TABLE 7

Shows the estimated weight of the DSR shells, both the standard and the long. Be sure to select the correct shell size, length, and material when reading the table.

MINI-CON™ DUMMY SEALING PLUG (DSP) ESTIMATED WEIGHT IN AIR

(Including Engaging Nut in Material Indicated)

Shell Material	Engaging Nut Materials
316 SST	CA 630
NI 50	NI 60
Titanium	Titanium
7075-T6	7075-T6

	EQUIVALENT VOLUME (CU IN)		316 SST (POUNDS)		NI 50 (POUNDS)		TITANIUM (POUNDS)	
SIZE	STD	LONG	STD	LONG	STD	LONG	STD	LONG
G-DSP	0.333	0.440	0.097	0.128	0.095	0.125	0.053	0.070
K-DSP	0.430	0.559	0.125	0.162	0.123	0.159	0.069	0.089
L-DSP	0.512	0.670	0.148	0.194	0.146	0.191	0.082	0.107
M-DSP	0.661	0.780	0.177	0.226	0.174	0.222	0.098	0.125
O-DSP	0.783	1.034	0.227	0.300	0.223	0.295	0.125	0.165
P-DSP	1.054	1.300	0.306	0.377	0.300	0.371	0.169	0.208
Q-DSP	1.313	1.550	0.381	0.449	0.374	.0442	0.210	0.248
R-DSP	1.462	1.798	0.424	0.521	0.417	0.512	0.234	0.288

TABLE 8

Shows the estimated weight of the DSP shells, both the standard and the long. Be sure to select the correct shell size, length, and material when reading the table.

MAXIMUM CABLE DIAMETERS

FOR USE WITH MINI-CON™ CONNECTORS

MING-CCP	9/16″ (0.562)
MING-CCP R/A	3/4″ (0.750)
MING-CCR	9/16″ (0.562)
MINK-CCP	7/8″ (0.875)
MINK-CCP R/A	5/8″ (0.625)
MINK-CCR	7/8″ (0.875)
MINL-CCP	1″ (1.000)
MINL-CCP R/A	5/8″ (0.625)
MINL-CCR	1″ (1.000)
MINM-CCP	1″ (1.000)
MINM-CCP R/A	29/32″ (0.906)
MINM-CCR	1″ (1.000)
MINO-CCP	1 1/4″ (1.250)
MINO-CCP R/A	3/4″ (0.750)
MINO-CCR	1 1/4″ (1.250)
MINP-CCP	1″ (1.000)
MINP-CCP R/A	27/32″ (0.843)
MINP-CCR	1″ (1.000)
MINQ-CCP	1 1/4″ (1.250)
MINQ-CCP R/A	7/8″ (0.875)
MINQ-CCR	1 1/4″ (1.250)
MINR-CCP	1 1/4″ (1.250)
MINR-CCP R/A	1″ (1.000)
MINR-CCR	1 1/4″ (1.250)
MINT-CCP	1 1/2″ (1.500)
MINT-CCP R/A	1 1/4″ (1.250)
MINT-CCR	1 1/2″ (1.500)
MINU-CCP	1 11/16″ (1.687)
MINU-CCP R/A	1 3/8″ (1.375)
MINU-CCR	1 11/16″ (1.687)



RECOMMENDED TIGHTENING TORQUE

1. Only qualified technicians should perform engagement and torquing operations.

2. Torque values listed below are maximum value. Valves given are for dry threads (nonlubricated). The BCR torque rating assumes a dry, metal customer housing. If a non-metallic housing is used, torque requirements will be lower. Consult factory for additional information.

3. Utilize inspection hole in engaging nuts to ensure complete engagement.

4.* During engagement it may be necessary to use up to 50% of the engaging nut torque value.

5. After complete engagement a torque of up to the maximum listed value may be applied to ensure engaging nut will not disengage during use.

Connector	BCR/L Mounting Torque (Inch-Pounds)	CCP/L & DSP/L Engaging Nut Torque* (Inch- Pounds)
MING	65-85	40-50
MINK	75-100	40-60
MINL	90-110	50-70
MINM	120-150	65-95
MINO	130-160	75-105
MINP	140-170	80-110
MINQ	150-180	85-115
MINR	170-220	90-120
MINT	210-250	125-150
MINU	220-260	135-160
MINX	240-280	155-180

QUALITY CONFORMANCE TESTING

The MINI-CON™ series has been subjected to, and successfully passed, a variety of environmental, physical, and electrical tests. These Quality Conformance tests were performed to ensure the operational integrity of this series under a variety of conditions.

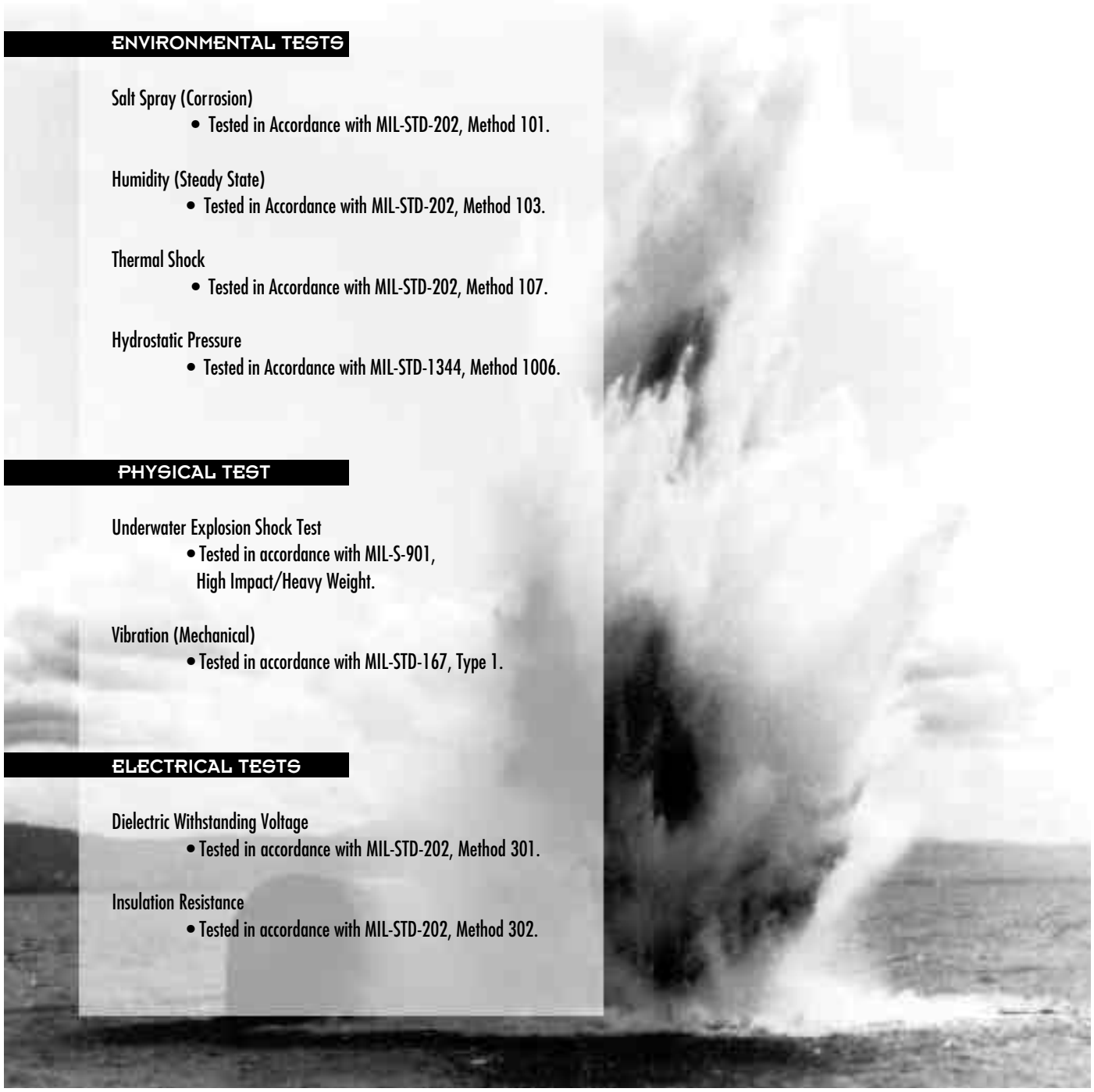

ENVIRONMENTAL TESTS

Salt Spray (Corrosion)
- Tested in Accordance with MIL-STD-202, Method 101.

Humidity (Steady State)
- Tested in Accordance with MIL-STD-202, Method 103.

Thermal Shock
- Tested in Accordance with MIL-STD-202, Method 107.

Hydrostatic Pressure
- Tested in Accordance with MIL-STD-1344, Method 1006.

PHYSICAL TEST

Underwater Explosion Shock Test
- Tested in accordance with MIL-S-901, High Impact/Heavy Weight.

Vibration (Mechanical)
- Tested in accordance with MIL-STD-167, Type 1.

ELECTRICAL TESTS

Dielectric Withstanding Voltage
- Tested in accordance with MIL-STD-202, Method 301.

Insulation Resistance
- Tested in accordance with MIL-STD-202, Method 302.

Our Quality Control Department is responsible for quality management and administration, quality engineering, quality plans and procedures, and inspection tests.

This department is composed of the Product Assurance Manager, Quality Control Manager, Document Administrator and several inspectors. The Quality System meets and exceeds the requirements of MIL-45208 and has met the standards of MIL-Q-9858 on some specific programs. The calibration system is completely computerized and satisfies the specifications of MIL-STD-45662.

All of our soldering personnel along with four inspectors are certified to MIL-STD-2000.

SEA CON® 's Quality Department maintains a quality manual as well as a quality departmental procedures manual. The procedures manual defines in detail the operations and testing requirements used by quality personnel. The quality personnel have witnessed and/or performed electrical, mechanical (destructive/non-destructive) and environmental testing and/or inspection to the following standards: MIL-STD-202, MIL-202, MIL-STD-454, MIL-STD-1344, Federal Test Method Standard 228, MIL-S-901, MIL-STD-167, and MIL-STD-2000.

Our connectors are put through four stringent testing procedures which include:

1. ELECTRICAL TESTING:

Hipot up to 20,000 VAC at 5mA
Insulation Resistance of up to 100G at 2500 VDC
DC resistances in μΩ

2. DIMENSIONAL:

Non contact measuring (OMIS II) with accuracy to 40 millionths of an inch and Optical Comparator with accuracy to 400 millionths of an inch. We maintain a full compliment of standard measuring instruments.

3. ENVIRONMENTAL:

Four Hydrostatic Pressure Vessels capable of testing underwater components to 1,000 PSI, 10,000 PSI, 18,000 PSI, and 20,000 PSI. Connectors can be tested mated, or in an open face condition and tests can be performed in water or oil. Electrical properties can often be monitored during the pressure cycling process.

4. MECHANICAL:

Pull tests up to 1,000 lbs in 5 lb. increments, flex testing, debonding, dissection and chemical analysis.

The MINI-CON™ series has expanded into our PBOF range of connectors to allow for easy field repairs and length adjustments on short cable assemblies. The MINI-CON™ PBOF series does not utilize a valve in the cable plug. Therefore, the connector interface does not flood with oil through an orifice but, traces of oil may be visible after pressurization. Elimination of the valve enables the MINI-CON™ characteristics (a high density-small diameter) to be used in the PBOF system. The pressure range for the PBOF series is shown on Page 30-10.

There are two basic styles of MINI-CON™ PBOF cable connector plugs (CCP): straight and right angles (R/A). Additionaly, SEA CON® has developed 30˚and 45˚ CCP-PBOF for use where cable packaging is critically tight. We have built many PBOF connectors for tubing sizes other than our standard. WYE transitions and PBOF to rubber molded transitions have also been furnished by SEA CON®.

Mating connectors for the CCP PBOF are the MINI-CON™ Bulkhead connector receptacle (BCR-PBOF), flange connector receptacle (FCR-PBOF), and cable connector receptacle (CCR-PBOF). The BCR and FCR connectors have identical dimensions to our standard connectors, but additional steps are taken to ensure that they are capable of handling the extra stresses that are imposed by the PBOF system. Be sure to state BCR-PBOF or FCR-PBOF when ordering Bulkhead connectors for this system. The CCR-PBOF is designed to use the same size tubing as the corresponding CCP-PBOF. However, other tubing sizes can be accomodated by special order.

Some advantages of a Pressure Balanced, Oil Filled System:

- The cable connector plug (CCP-PBOF) and cable connector receptacle (CCR-PBOF) are easily assembled in the field as no potting or molding is required.
- Since conventional molding of the connector to the cable is not necessary in this system, problems such as open circuits caused by wires being broken or pulled out of the terminals, and undue stress being placed on the conductor's terminations are eliminated.
- Fatigue and failure of termination joints caused by pressure cycling is nonexistent because the PBOF pressure compensated system eliminates the pistoning action of conductors.
- Various cable combinations are easily obtainable since assembly consists merely of installing insulated conductors within commercially available tubing, securing to the connector shell with hose clamps, and filling with oil.
- Pin holes or cracks in the tubing become obvious prior to usage, evidenced by the leakage of oil.
- Should the tubing be cut during use the system would continue to operate for a considerable period of time until the oil is forced out.
- Rapid and inexpensive cable repair can be accomplished in the field.
- For more information on PBOF's, please refer to Section 70.



CABLE CONNECTOR PLUG (CCP-PBOF)

CCP-PBOF(MATES TO BCR-PBOF/FCR-PBOF/CCR-PBOF)

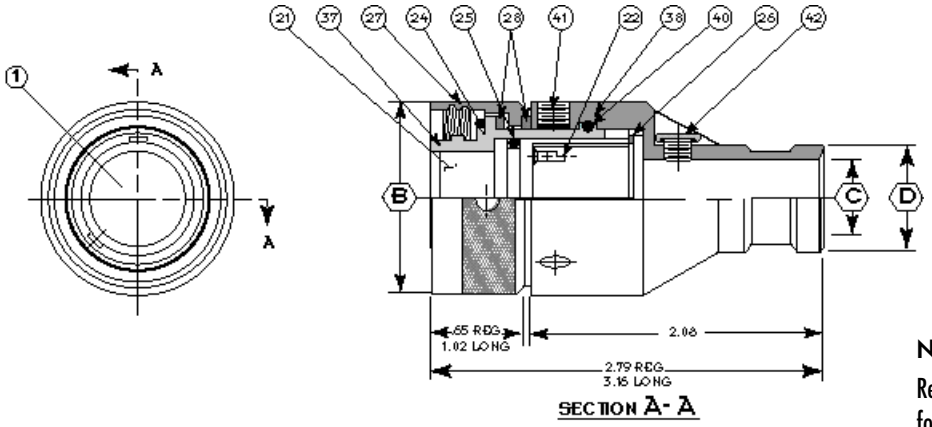

SECTION A-A

WHEN ORDERING MIN-CCP-PBOF YOU RECEIVE: (21)(22)(24)(25)(26)(27)(28)(37)(38)(40)(41)(42)

NOTE:
Reference pages 30-26 – 30-29 for pattern availability.

PART NAME	(B) INCHES	(C) INCHES	(D) INCHES	(24) O-RING	(25) O-RING	(26) SPIROLOX	(40) O-RING	RECOMMENDED TUBE I.D. SIZE
MING-CCP-PBOF	1.00	0.50	0.62	2-015	2-013	UR56	2-017	0.50
MINK-CCP-PBOF	1.12	0.50	0.62	2-017	2-015	UR68	2-116	0.50
MINL-CCP-PBOF	1.25	0.56	0.75	2-019	2-016	UR75	2-020	0.63
MINM-CCP-PBOF	1.37	0.56	0.75	2-020	2-018	UR87	2-022	0.63
MINO-CCP-PBOF	1.62	0.94	1.12	2-024	2-020	UR100	2-025	1.00
MINP-CCP-PBOF	1.75	0.94	1.12	2-027	2-022	UR112	2-027	1.00
MINQ-CCP-PBOF	1.87	1.06	1.25	2-028	2-025	UR131	2-029	1.13
MINR-CCP-PBOF	2.00	1.06	1.25	2-029	2-026	UR137	5-009	1.13

CABLE CONNECTOR PLUG (CCP-PBOF-R/A)

CCP-PBOF-R/A(MATES TO BCR-PBOF/FCR-PBOF/CCR-PBOF)

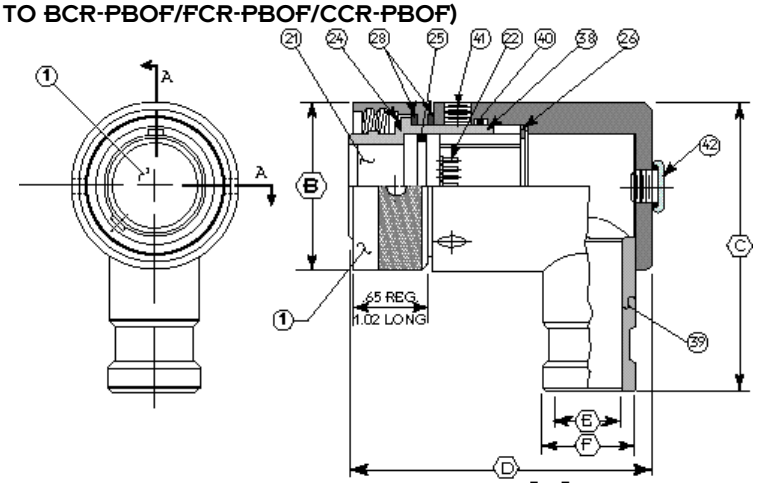

SECTION A-A

WHEN ORDERING MIN-CCP-PBOF-R/A YOU RECEIVE: (21)(22)(24)(25)(26)(27)(28)(38)(39)(40)(41)(42)

NOTE:
Reference pages 30-26 – 30-29 for pattern availability.

PART NAME	(B) INCHES	(C) INCHES	(D) INCHES STD	(D) INCHES LONG	(E) INCHES	(F) INCHES	(24) O-RING	(25) O-RING	(26) SPIROLOX	(40) O-RING	RECOMMENDED TUBE I.D. SIZE
MING-CCP-R/A-PBOF	1.00	2.20	2.37	2.75	0.50	0.62	2-015	2-013	UR56	2-017	0.50
MINK-CCP-R/A-PBOF	1.12	2.20	2.37	2.75	0.50	0.62	2-017	2-015	UR68	2-116	0.50
MINL-CCP-R/A-PBOF	1.25	2.37	2.50	2.87	0.56	0.75	2-019	2-016	UR75	2-020	0.63
MINM-CCP-R/A-PBOF	1.37	2.37	2.50	2.87	0.56	0.75	2-020	2-018	UR87	2-022	0.63
MINO-CCP-R/A-PBOF	1.62	3.00	3.03	3.40	0.94	1.12	2-024	2-020	UR100	2-025	1.00
MINP-CCP-R/A-PBOF	1.75	3.00	3.03	3.40	0.94	1.12	2-027	2-022	UR112	2-027	1.00
MINQ-CCP-R/A-PBOF	1.87	3.20	3.15	3.52	1.06	1.25	2-028	2-025	UR131	2-029	1.13
MINR-CCP-R/A-PBOF	2.00	3.20	3.15	3.52	1.06	1.25	2-029	2-026	UR137	5-009	1.13

CABLE CONNECTOR RECEPTACLE (CCR-PBOF)

CCR-PBOF (MATES TO CCP PBOF/CCP-PBOF-R/A)

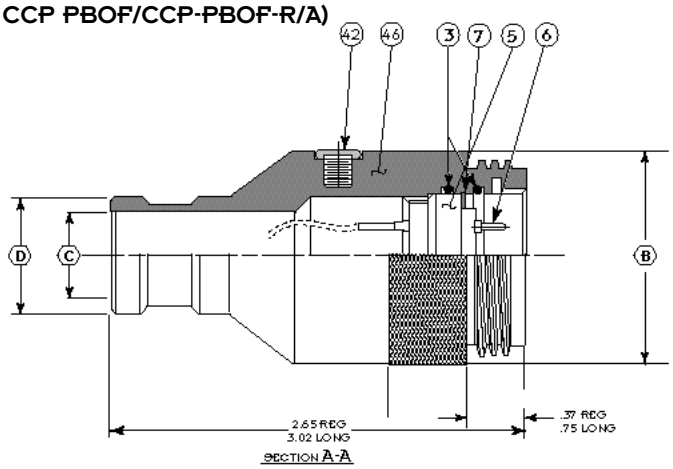

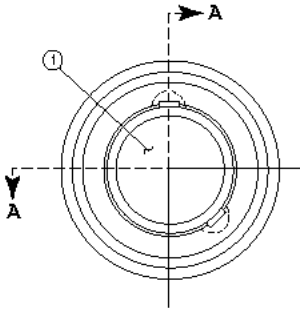

NOTE:
Reference pages 30-26 – 30-29 for pattern availability.

WHEN ORDERING MIN-CCR-PBOF YOU RECEIVE: 3 5 6 7 42 46

PART NAME	B INCHES	C INCHES	D INCHES	7 SPIROLOX	3 O-RING	RECOMMENDED TUBE I.D. SIZE
MING-CCR-PBOF	1.00	0.50	0.62	UR50	2-014	0.50
MINK-CCR-PBOF	1.12	0.50	0.62	UR62	2-016	0.50
MINL-CCR-PBOF	1.25	0.56	0.75	UR75	2-018	0.62
MINM-CCR-PBOF	1.37	0.56	0.75	UR81	2-019	0.62
MINO-CCR-PBOF	1.62	0.94	1.12	UR106	2-023	1.00
MINP-CCR-PBOF	1.75	0.94	1.12	UR118	2-025	1.00
MINQ-CCR-PBOF	1.87	1.06	1.25	UR137	2-028	1.12
MINR-CCR-PBOF	2.00	1.06	1.25	UR150	2-029	1.12

REVERSED MINIATURE CONNECTORS (VMIN)

The'V' before the MIN prefix represents a reversed miniature insert. Many of our bulkhead connectors are available with sockets instead of pins, and the corresponding cable plugs have pins instead of sockets.

VMIN is an option for those applications which require design of cabling/harnessing systems to be electrically sound with respect to "power on" safety requirements.

It should be noted that reversal of sockets and pins may not be required as the pins in standard bulkhead connectors are recessed approximately one quarter of an inch. Contact the factory for recommendations on your specific application.

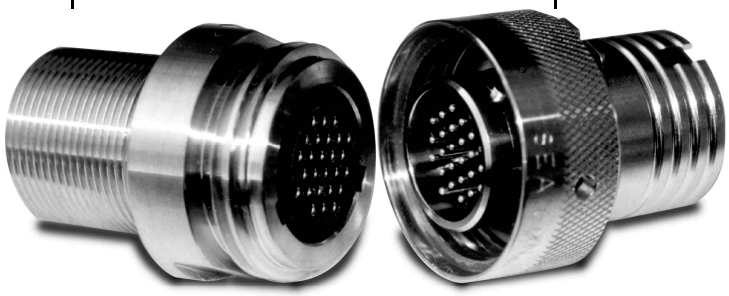

Based on a natural extension of the MINI-CON™ product line, SEA CON® has developed a family of fiber optic connectors built to withstand a variety of environmental conditions, including: hydrostatic pressure, thermal and explosive shock, and vibration. With the absence of any universal specifications for underwater fiber optic connectors, product development has concentrated on adding fiber optic capabilities to existing electrical connector designs.

In accordance with these design objectives, SEA CON® has successfully built and delivered several configurations of MINI-CON™ electro-optic connectors, many of which have been qualification tested and are in operation.

As with any underwater connection system, the shells or housing remain a critical feature. The inclusion of fiber optics in a connector design is best achieved with a proven underwater shell design like SEA CON®'s MINI-CON™ line. This series is one of the few underwater connector designs which have been qualification tested to the requirements of military sub sea specifications.



Furthermore, reliability and repeatability in electro-optic connectors are best achieved by adapting commercially available fiber optic contacts into the traditional electrical insert.

Aside from providing an optical retrofit for established systems, this method builds on the successful history of common optical products like ST or FC connectors.

SEA CON® has taken this development a step further by adding open face pressure capability to the list of features in its electro-optic series. This is almost always recommended for the receptacle in a connector set, and thus provides an added level of seal redundancy. SEA CON® has also provided cable plugs with similar open face pressure ratings.

The optical/electrical hybrid connectors have been customized to terminate several cable designs including various types of both loose and tight buffered cables. In order to maximize the efficiency of the design and optimize reliability, all hybrid terminations are engineered to accomodate a specific cable.

MINI-CON™ SPECIAL CONNECTORS

SELF WIPING MINIATURES

On applications where high voltage miniature connectors are required MINI-CON™ series offers a Self Wiping (SW) feature.

The SW feature ensures that the insulating areas are wiped clean and dry during the mating process. Without this feature the high voltage arcing path would have to be increased dramatically, thus requiring the use of a large connector.

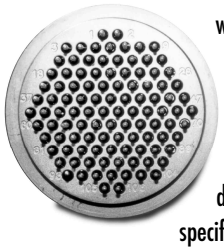

Please contact the factory with your high voltage requirements. We will either recommend an existing MINI-CON™ SW connector or a design suited to your specific needs.

HIGH PRESSURE CONNECTORS.

For higher mated pressure ratings than those shown on page 30-10, the MINI-CON™ can be manufactured with titanium shells. Titanium shells increase the pressure rating to 20,000 PSI, mated.

For high open face pressure ratings, most MINI-CON™ bulkhead connectors can be manufactured with a Glass Sealed Contact Insert Receptacle (CIR). These inserts consist of gold plated pins, compression glass sealed, in a type 316L stainless steel contact web. Our standard Glass Seal MINI-CON™ is rated at 13,500 PSI, open face. For higher pressures, contact the factory. These inserts are a direct replacement for our standard epoxy inserts and may be ordered separately. They may be used in the titanium shells, above, or in standard MINI-CON™ shells.

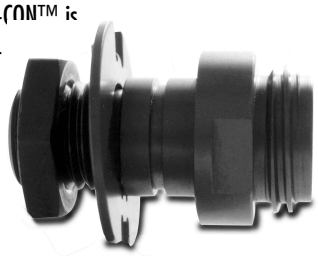

As SEA CON® continues to design for custom applications, we are always adding to our chart of available contact configurations. Our current configuration availability is enclosed as an insert to the back inside panel of this brochure. If another pattern is required, please contact the factory.

MINI-CON™ MASTER PARTS LIST

ITEM	QTY	PART / DESCRIPTION	NOTES
1	—	INSERT FACE PATTERN	11
2	1	O-RING	6 13
3	AR	O-RING	6
4	1	MIN-BCR	1 13
5	1	MIN-CIR	2
6	AR	CONTACT PINS	3 11
7	1	SPIROLOX	5
8	1	BULKHEAD HEX NUT (OPTIONAL)	5
9	1	BULKHEAD WASHER (OPTIONAL)	5
10	AR	EPOXY (OPTIONAL)	7
11	AR	HOOK-UP WIRE (OPTIONAL PIGTAILS)	8
12	1	MIN-FCR	1 13
13	1	O-RING	6
14	4	SOCKET CAP HEX SCREW (OPTIONAL)	5
15	1	MIN-CCR	1
16	AR	FILL COMPOUND REQUIRED	14
17	1	MIN-CCP/CCR FI BOOT (OPTIONAL)	4 12
18	AR	OVERMOLD (OPTIONAL)	4 12
19	2	NYLON CABLE TIE (OPTIONAL)	12
20	1	MIN-CCP	1 13
21	1	MIN-CIP	2
22	AR	CONTACT SOCKETS	3 11
23	1	RETAINING RING	5
24	1	O-RING	6 13
25	1	O-RING	6
26	1	SPIROLOX	5
27	1	ENGAGING NUT	10
28	2	ENGAGING NUT WASHER	9
29	1	MIN-DSR	1
30	1	~~MIN-DSRL~~ (REFER TO 29)	1
31	1	MIN-DSP	1
32	1	~~MIN-DSPL~~ (REFER TO 31)	1
33	1	MIN-PSR	9
34	1	~~MIN-PSRL~~ (REFER TO 33)	9
35	1	MIN-PSP	9
36	1	~~MIN-PSPL~~ (REFER TO 35)	9
37	1	MIN-CCP-PBOF-FWD END	1
38	1	MIN-CCP-PBOF-AFT END	1
39	1	MIN-CCP-PBOF-R/A AFT END	1
40	1	O-RING	6
41	3	8-32 UNC-2A HEX SOCKET SET SCREW/CUP POINT	5
42	1	10-24 UNC-2A SLOTTED PAN HEAD SCREW WITH O-RING	5
43	1	MIN-BCR DUAL O-RING	1 13
44	1	O-RING	6
45	1	O-RING	6 13
46	1	MIN-CCR-PBOF	1

NOTES KEY ON REVERSE SIDE

NOTES:

1. MATERIAL: 316 STAINLESS STEEL PER MIL-S-862.
2. MATERIAL: GLASS REINFORCED EPOXY, SEA CON® XS-2748.
3. MATERIAL: COPPER ALLOY & GOLD PLATE PER MIL-G-45204.
4. MATERIAL: NEOPRENE MOLDING PER SEA CON® X-5727.
5. MATERIAL: HIGH GRADE STAINLESS STEEL.
6. MATERIAL: BUNA-N, 70 DUROMETER.
7. MATERIAL: EPON 828/CIBA 840.
8. MATERIAL: AS SPECIFIED BY CUSTOMER.
9. MATERIAL: BLACK DELRIN.
10. MATERIAL: COPPER ALLOY 630.
11. REF FACE CONFIGURATIONS FOR SIZE OF CONTACTS AND LOCATIONS.
12. AN OVERMOLD OR FIELD INSTALLABLE BOOT IS OPTIONAL ON BOTH THE CCP AND THE CCR.
13. DOVETAIL GROOVE TO PREVENT LOSS OF O-RING.
14. NOT SUPPLIED.

SIZE	MINI-CON™ SERIES CONTACT CONFIGURATIONS AVAILABLE
G	 3#16 LONG · 3#22 · 4#22 · 5#22 · 6#22 · 7#20 · 10#22
K	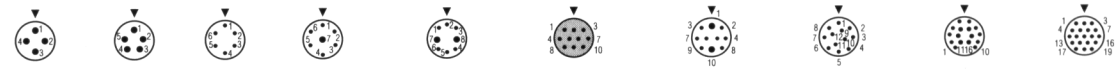 4#16 LONG · 5#16 LONG · 6#20 · 7 { 1#10 6#20 LONG · 8 { 2#14 6#22 LONG · 10#20 · 10 { 2#14 8#20 LONG · 12#22 · 16 { 6#20 10#22 · 19#22
L	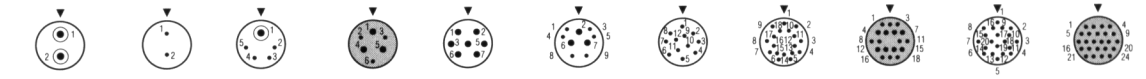 2#22/20 ⌒ COAX LONG · 2#20 · 5 { 1#22/20 ⌒ COAX 4#20 LONG · 6 { 3#10 3#22 LONG · 7#16 LONG · 9 { 3#14 6#22 LONG · 12#22 · 18#22 · 18 { 8#20 10#22 · 20 { 6#20 14#22 · 24#22
M	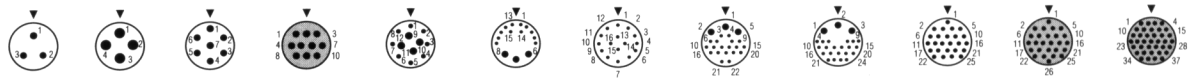 3#14 LONG · 4#10 LONG · 7#16 LONG · 10#16 LONG · 12 { 4#16 8#20 LONG · 15 { 3#16 12#22 LONG · 16#22 · 22 { 3#16 19#22 LONG · 24 { 3#16 21#22 LONG · 25#20 · 26#20 · 37#22
O	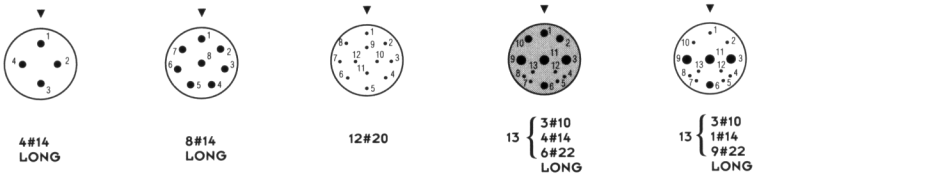 4#14 LONG · 8#14 LONG · 12#20 · 13 { 3#10 4#14 6#22 LONG · 13 { 3#10 1#14 9#22 LONG 16#22 · 21 { 8#14 13#20 LONG · 44#20 · 49 { 6#16 9#20 34#22 LONG · 52#22 · 56#22
P	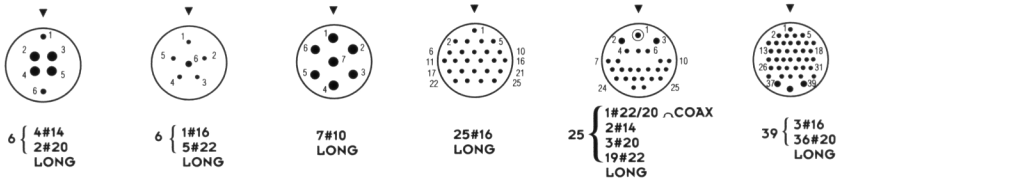 6 { 4#14 2#20 LONG · 6 { 1#16 5#22 LONG · 7#10 LONG · 25#16 LONG · 25 { 1#22/20 ⌒ COAX 2#14 3#20 19#22 LONG · 39 { 3#16 36#20 LONG 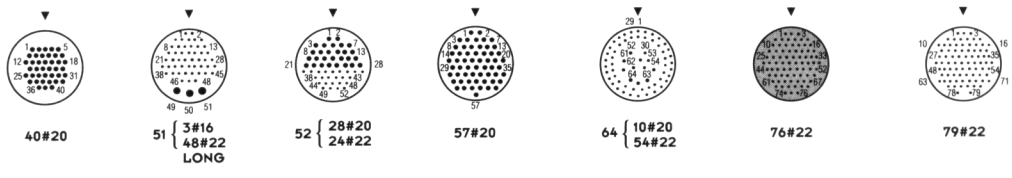 40#20 · 51 { 3#16 48#22 LONG · 52 { 28#20 24#22 · 57#20 · 64 { 10#20 54#22 · 76#22 · 79#22

NOTES: All configurations shown are the face view of the receptacle connector (BCR/FCR/CCR).
Available as Glass Sealed Style Connectors.
600 VDC is standard; many of the above can handle higher voltage ratings.
Please contact our factory for specific voltage ratings.

SIZE	MINI-CON™ SERIES CONTACT CONFIGURATIONS AVAILABLE
Q	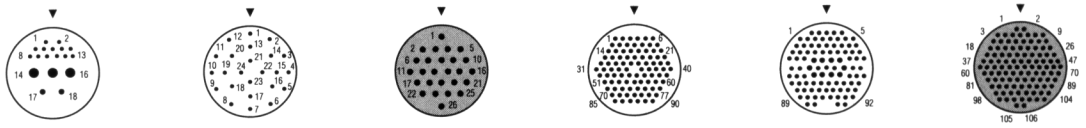 18 { 3#14, 2#16, 13#22 LONG 24#20 26#16 LONG 90#22 92 { 10#20, 82#22 106#22
R	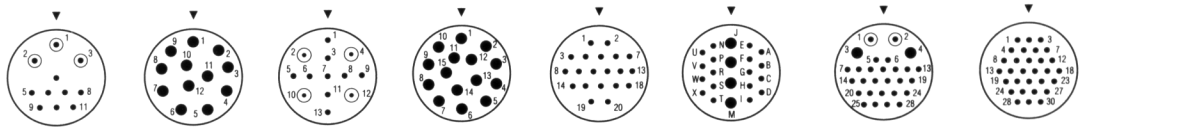 11 { 3#22/20 COAX, 8#16 LONG 12#10 LONG 13 { 4#20 COAX, 9#16 LONG 15#10 LONG 20#16 LONG 22 { 4#10, 18#16 LONG 28 { 2#22/20 COAX, 2#10, 24#16 LONG 30#16 LONG
	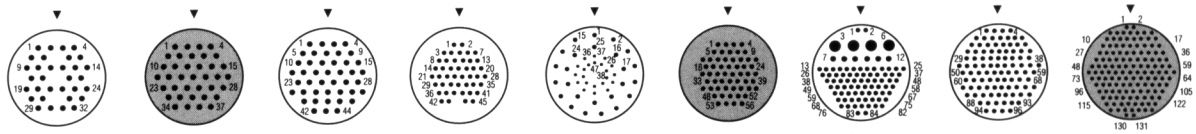 32#16 LONG 37#16 LONG 44#16 LONG 45#20 47 { 24#20, 23#22 56#20 84 { 4#10, 6#16, 74#22 LONG 96#20 131#22
T	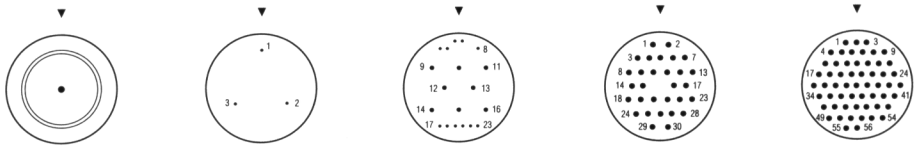 RG8 COAX LONG 3#22 23 { 8#20, 15#22 30#16 LONG 56#16 LONG
U	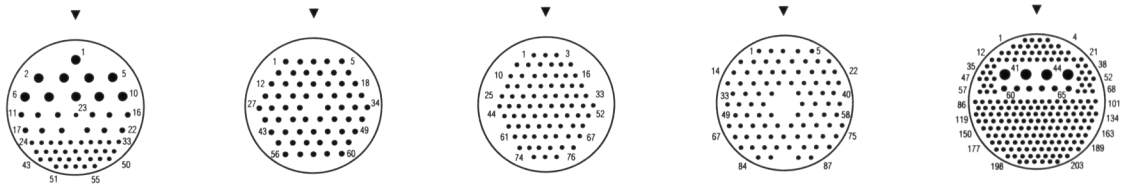 55 { 10#14, 12#16, 33#20 LONG 60#16 LONG 76#22 87#20 203 { 4#10, 6#16, 193#22 LONG
X	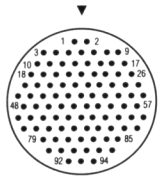 94#16 LONG

NOTES: All configurations shown are the face view of the receptacle connector (BCR/FCR/CCR).

Available as Glass Sealed Style Connectors.

600 VDC is standard; many of the above can handle higher voltage ratings.

Please contact our factory for specific voltage ratings.

SEA CON® AC

REVERSED MINI-CON™ SERIES (VMIN) CONTACT CONFIGURATIONS AVAILABLE

SIZE			
G	 10#22	K	 12#22  16 { 10#22 6#20 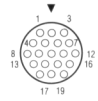 19#22
L	 7#16 LONG  18#22		
M	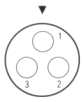 3#14 LONG 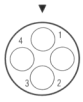 4#10 LONG  7#16 LONG 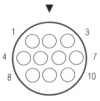 10#16 LONG 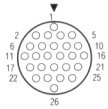 26#20 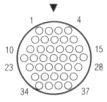 37#22		
O	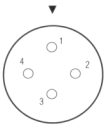 4#14 LONG 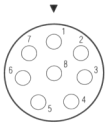 8#14 LONG 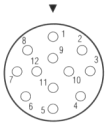 12#20 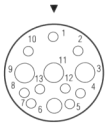 13 { 3#10 1#14 9#22 LONG 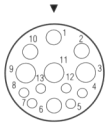 13 { 3#10 4#14 6#22 LONG 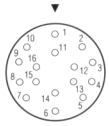 16#22 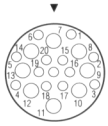 21 { 13#20 8#14 LONG 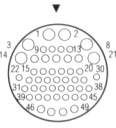 49 { 6#16 9#20 34#22 LONG 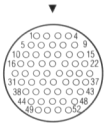 52#22		
P	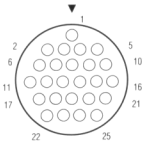 25#16 LONG 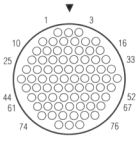 76#22		
Q	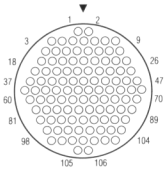 106#22		
R	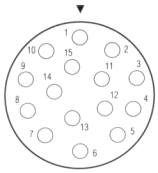 15#10 LONG 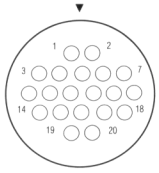 20#16 LONG 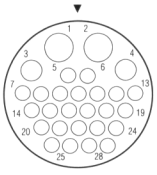 28 { 2#22/20 COAX 2#10 24#16 LONG 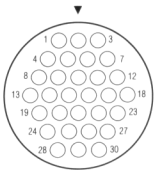 30#16 LONG 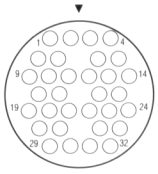 32#16 LONG 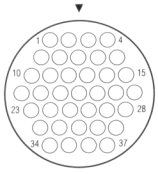 37#16 LONG 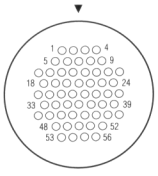 56#20 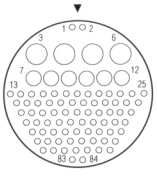 84 { 4#10 6#16 74#22 LONG 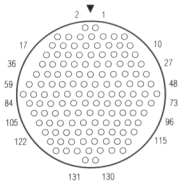 131#22 LONG		

NOTES: All configurations shown are the face view of the receptacle connector (BCR/FCR/CCR).
600 VDC is standard; many of the above can handle higher voltage ratings.
Please contact our factory for specific voltage ratings.

MINI-CON™ FIBER OPTIC CONTACT CONFIGURATIONS AVAILABLE

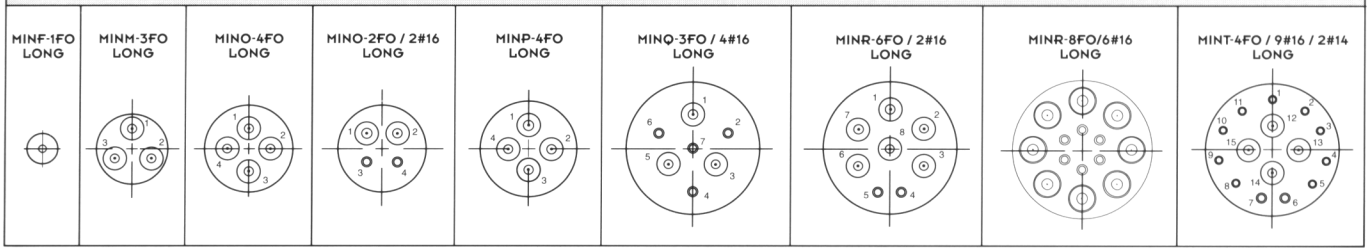

MINI-CON™ FIBER OPTIC SERIES (MINF)

BULKHEAD CONNECTOR RECEPTACLE (BCR)

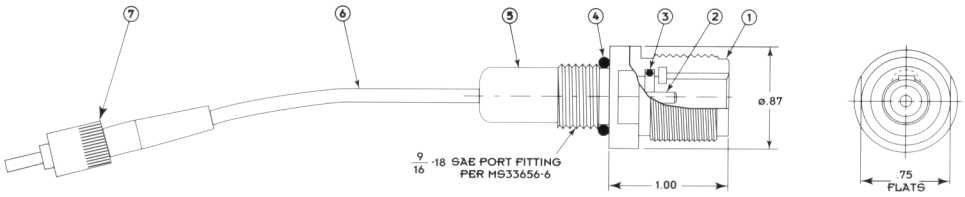

CABLE CONNECTOR RECEPTACLE (CCR)

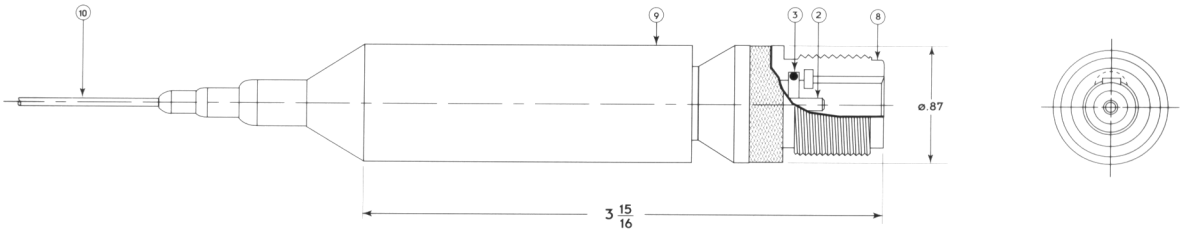

CABLE CONNECTOR PLUG (CCP)

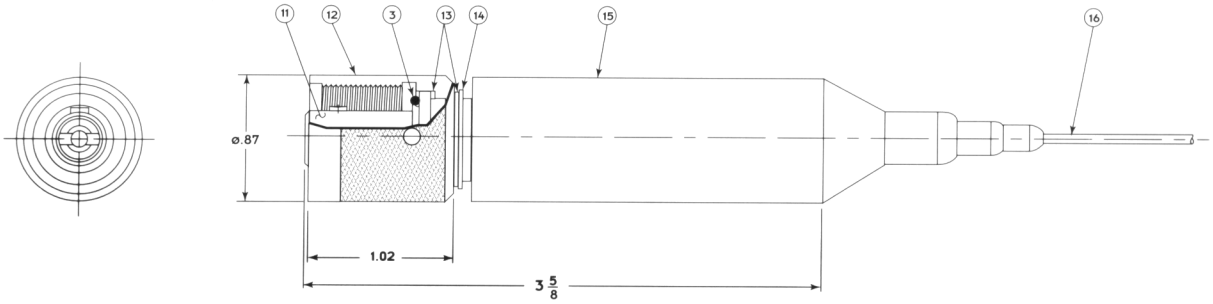

ITEM	QTY	PART / DESCRIPTION	NOTES
1	1	MINF-BCRL SHELL	1
2	1	PLUG FERRULE	4
3	1	O-RING	3
4	1	O-RING	3
5	AR	OVERMOLD	5
6	AR	CABLE-CUSTOMER SPECIFIED	—
7	1	CONNECTOR-CUSTOMER SPECIFIED	—
8	1	MINF-CCRL FWD END	1
9	AR	OVERMOLD	5
10	AR	CABLE-CUSTOMER SPECIFIED	—
11	1	MINF-CCPL FWD END	1
12	1	MINF-CCPL ENGAGING NUT	2
13	2	MINF-CCPL ENGAGING NUT WASHER	6
14	1	RETAINING RING	7
15	AR	OVERMOLD	5
16	AR	CABLE-CUSTOMER SPECIFIED	—

NOTES:

1. MATERIAL: 316 STAINLESS STEEL PER MIL-S-862.
2. MATERIAL: COPPER ALLOY 630.
3. MATERIAL: BUNA-N, 70 DUROMETER.
4. MATERIAL: ZIRCONIA CERMAIC.
5. MATERIAL: POLYURETHANE PER-MIL-M-24041, BLACK.
6. MATERIAL: BLACK DELRIN.
7. MATERIAL: HIGH GRADE STAINLESS STEEL.

SEA CON® AC

MicroMinicon™

Introduction

The SEA CON® line of Miniature Underwater Connectors, MINI-CON™, were developed for the purpose of supplying the smallest diameter, highest density, highest pressure and finest quality electrical connectors. The MINI-CON™ Series Connectors of the miniaturized connector lines have been supplied to numerous naval programs and systems as well as to private industry; offshore oil related systems, ROV's and others. Now, a smaller version of the MINI-CON™ Connector Series is available, and has been assigned the trade name MicroMinicon™ .

The MicroMinicon™ Connector Series was designed using over 30 years of applied experience in manufacturing the highest quality electrical connectors. We have taken the engineering concepts that have proven to be successful in the MINI-CON™ Series and incorporated them into this design. With these results, we can only offer the finest. Don't let the size fool you!

The connectors range in sizes from 1/2" to just over a 2" diameter. They contain electrical contacts from 28 awg up to 10 awg, and Fiber Optic contacts for both single mode and multi mode. The standard range of MicroMinicon™ connectors consist of thirteen (13) shell sizes. At this time we have available G,K,L,M,O,Q,S and V. We anticipate adding shell sizes P,R,T,U, and W to the series in the very near future by priority of customer demand. The connectors have the option of right angles, over molding cable plug, field installing the cable using boots or terminating with a Pressure Balanced Oil-Filled (PBOF) System. As with our other products, the ability and availability are limitless. If your needs are specific, please call the SEA CON® Sales Department.

Part Numbering System

MM G 6 CCP PBOF R/A FI

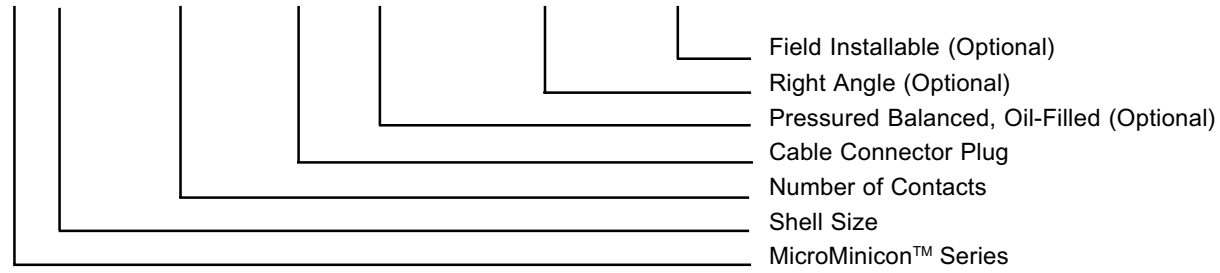

CCR	Cable Connector Receptacle	CIR	Connector Insert Receptacle
FCR	Flange Connector Receptacle		(male insert only, fits into BCR/CCR/FCR shell)
CCP	Cable Connector Plug	CIP	Connector Insert Plug
BCR	Bulkhead Connector Receptacle		(female insert only, fits in CCP shell)
		DSR	Dummy Sealing Receptacle

Part Specifications

The MicroMinicon™ Series consists of metal shell bulkhead connectors, cable plug connectors, and cable receptacle connectors. Only the best materials for the harsh environments are used as standard components; Titanium housing with elastomeric o-rings and retaining rings made form alloys that are virtually insert in the sea water.

The standard connector inserts are manufactured of medium impact glass reinforced epoxy (MIL-M-24325). The electrical contacts are permanently molded within the glass reinforced epoxy. Open face pressure resistance is available on most bulkhead connectors (except those with coax contacts) and must be specified when ordering.

Receptacle Housings	Ti6Al4V
Plug Housings	Ti6Al4V
Engaging Nut	TiGrade 2
Contacts	Copper Alloy, Gold Plated

MicroMinicon™

Design Uniqueness

In order to maintain the miniaturization of the series and offer minimal wall thickness, special o-rings were developed to seal the interfaces on all plugs and receptacles.

The inserts and bulkhead connectors are all retained using Shape Memory Alloy (SMA) retaining rings. The SMA are manufactured of noncorrosive material and designed to be as thin as possible, yet still perform the job required. The memory characteristic is beneficial when the insert needs to be removed from the shell.

Applying a predetermined heat to the connector housing will cause the SMA ring to shrink away from the internal groove allowing for easy removal. This state-of-the-art design prevents damage to the electrical wires and optical fibers that are attached to the inserts.

The inserts are aligned such that the keys are engaged before the o-rings and electrical contacts are seated. The keys are designed to engage and secure the insert in the axial and rotational planes.

In many applications use a flange mounted receptacle is preferred instead of a screw-in type. The MicroMinicon™ Series does not require a separate flange connector. SEA CON® has designed modular a flange that fits over the screw-in type, thus eliminating the need to purchase a separate shell without compromising performance.

The connectors used for cable installation (CCP and CCR) have an optional aft end. The back end to the optional aft is identical to the back end of the connector being installed onto the cable. Thus the design allows multiple types of aft end to be installed by stacking them.The modifications to the aft end are endless, to list a few: kevlar, armor, PBOF, field installable, water blocking header.

When the PBOF option is used, oil passes through the cable side insert (CCP). For this to be sucessful, a valve must be used. We have designed and manufactured a very small ‘receptacle’ valve using only the finest material, unique to the underwater industry.

SEA CON® has emphasized the incremental design approach, where continual product improvement is built upon existing and proven technology rather than completely designing from scratch.

Quality Conformance Testing

Environmental

Humidity (steady state)
Tested in accordance with MIL-STD-202, Method 103

Thermal Shock
Tested in accordance with MIL-STD-202, Method 107

Mechanical Shock
Tested in accordance with MIL-S-901, Grade A, Class 1

Hydrostatic Pressure
Tested in accordance with MIL-STD-202, Method 1006

Physical

Vibration
Tested in accordance with MIL-STD-202, Method 301

Electrical

Dielectric Withstanding Voltage
Tested in accordance with MIL-STD-202, Method 301

Insulation Resistance
Tested in accordance with MIL-STD-202, Method 302

Pressure and Voltage Ratings**

Standard Shells and CIR Design

Condition	Pressure Rating	
Sizes	G,K,L	M,O,Q,S,V
Mated	13,500 PSI	13,500 PSI
Open Face (Insert Prepared) CIR	3,000 PSI	3,000 PSI
PBOF (Insert Prepared) CIR	5,000 PSI	5,000 PSI

Standard Shells And Glass Sealed CIR Design

Condition	Pressure Rating
Sizes	G,K,M,O,Q,S,V
Mated	13,500 PSI
Open Face CIR	20,000 PSI
PBOF	20,000 PSI

*** The pressures and voltages listed are standard for the MicroMinicon™. Other ratings may be achieved by utilization of different materials, contacts, or insert design.*

Three hundred (300) VDC is the standard voltage rating; however, we are able to attain higher ratings. Please call the factory for your specifice needs.

As with our other products, in order to improve performance and achieve incomparable quality, we reserve the right to modify parts without notice.

MicroMinicon™ BCR/FCR/CCP

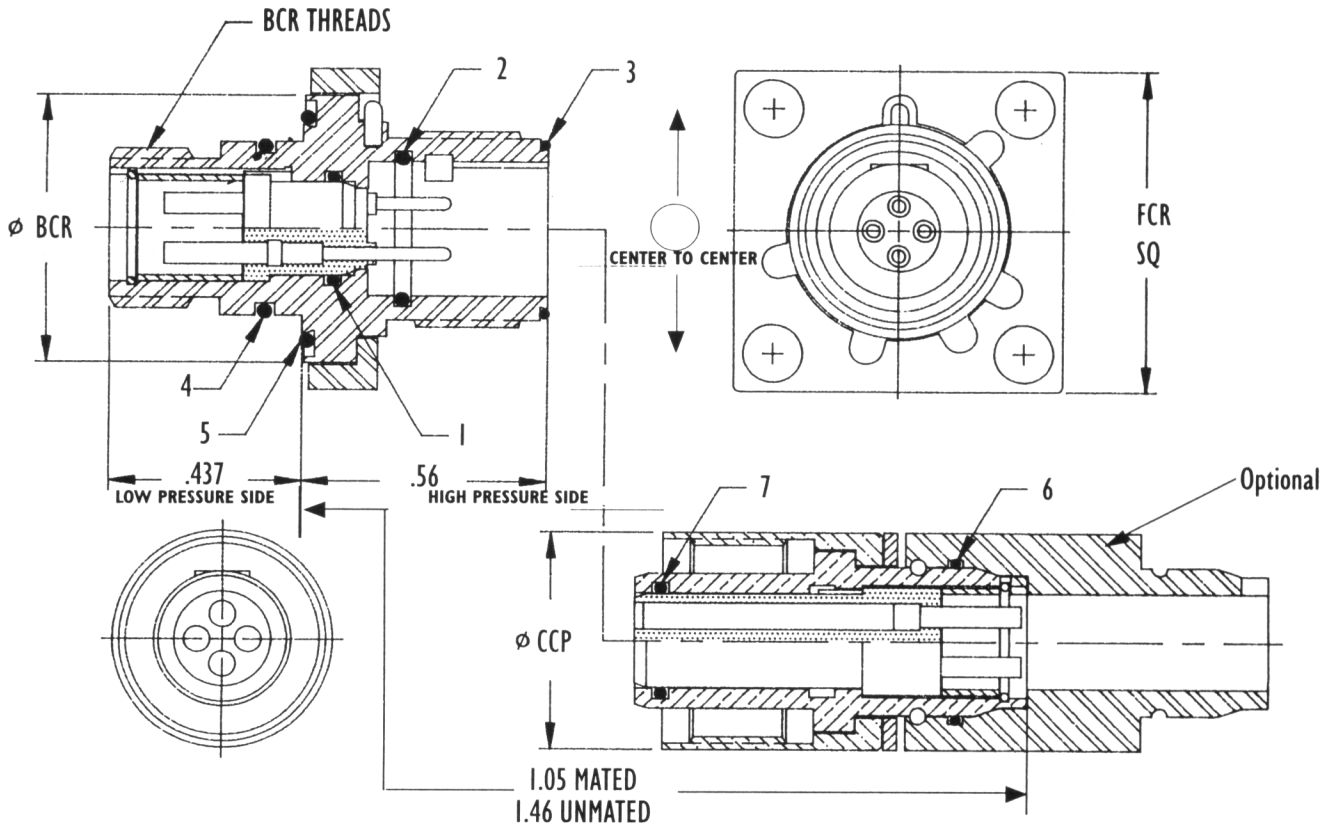

SIZE	od	od BCR	FCR Eng/Nut	BCR thds sq	O-ring 1	O-ring 2	O-ring 3	O-ring 4	O-ring 5	O-ring 6	O-ring 7	Ret ring CCP	Ret ring B/F/CCR
G*	0.625	0.500	0.750	0.375-24 UNF	SS-201	SS-301	SS-303	SS-302	SS-404	SS-302	SS-201	MMRR-25	MMRR-25
K*	0.750	0.625	0.875	0-500-20 UNF	SS-301	SS-401	SS-403	SS-402	SS-601	SS-402	SS-301	MMRR-35	MMRR-35
L*	0.875	0.750	1.000	0.593-18 UNF	SS-401	SS-501	SS-503	SS-502	SS-702	SS-502	SS-401	MMRR-45	MMRR-45
M	1.000	0.875	1.125	0.687-20 UN	SS-602	SS-602	SS-603	SS-602	SS-801	SS-701	SS-501	MMRR-61	MMRR-64
O	1.125	1.000	1.250	0.812-20 UNEF	SS-703	SS-703	SS-704	SS-703	SS-901	SS-802	SS-602	MMRR-72	MMRR-76
P	1.250	1.125	1.375										
Q	1.375	1.250	1.500	1.062-18 UNEF	SS-901	SS-901	SS-1001	SS-1001	SS-1201	SS-1001	SS-802	MMRR-91	MMRR-95
R	1.500	1.375	1.625										
S	1.625	1.500	1.750	1.312-18 UNEF	SS-1202	SS-1202	SS-1204	SS-1203	SS-1401	SS1204	SS-1002	MMRR-119	MMRR-125
T	1.750	1.625	1.875										
U	1.875	1.750	2.000										
V	2.000	1.875	2.125	1 9/16-18 UNEF	SS-1402	SS-1402	SS-1601	SS-1402	SS-1701	SS-1601	SS-1301	MMRR-144	MMRR-150
W	2.125	2.000	2.250										

■ = SIZES PENDING AVAILABILITY

* = Reverse load; insert loaded from the low pressure side as shown in drawing above.
All other insert sizes are loaded from the high pressure side.

SEA CON A

FCR Mounting

SIZE	FCR SQ	CENTER TO CENTER	HEXAGON SOCKET HEAD CAP SCREW
G rl	0.750	0.572	4-40 UNC
K rl	0.875	0.686	4-40 UNC
L rl	1.000	0.800	4-40 UNC
M	1.125	0.875	6-32 UNC
O	1.250	1.000	6-32 UNC
P	1.375	--	--
Q	1.500	1.206	10-24 UNC
R	1.625	--	--
S	1.750	1.206	10-24 UNC
T	1.875	--	--
U	2.000	--	--
V	2.125	1.768	10-24 UNC
W	2.250	--	--

MicroMinicon™

Contact Configurations

Scaled 1:1

OTHER PATTERNS ARE AVAILABLE WITH THE FOLLOWING GAUGES:

G



MMG-4-BCR
4#22



MMG-8-BCR
8#28

28 AWG
20 AWG

K



MMK-7-BCR
7#22



MMK-4-PBOF
4#22

28 AWG
20 AWG

L



MML-14-BCR
14#22



MML-10-PBOF
10#22

28 AWG
20 AWG

M



MMM-26-BCR
26#22



MMM-22-PBOF
22#22

28 AWG
20 AWG
16 AWG
14 AWG
10 AWG

O



MMO-38-BCR
38#22



MMO-34-PBOF
34#22

28 AWG
20 AWG
16 AWG
14 AWG
10 AWG

Q

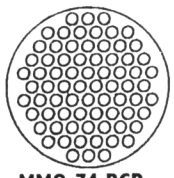

MMQ-74-BCR
74#22



MMQ-70-PBOF
70#22

28 AWG
20 AWG
16 AWG
14 AWG
10 AWG

S

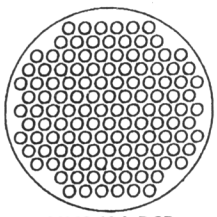

MMS-126-BCR
126#22

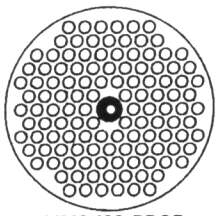

MMS-122-PBOF
122#22

28 AWG
20 AWG
16 AWG
14 AWG
10 AWG

V

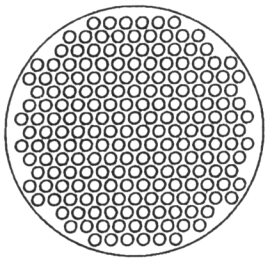

MMV-202-BCR
202#22

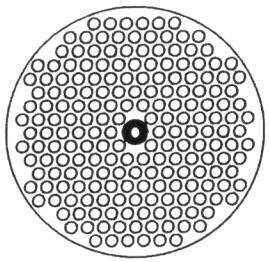

MMV-198-PBOF
198#22

28 AWG
20 AWG
16 AWG
14 AWG
10 AWG

Mating Sequence

Scaled 1:1

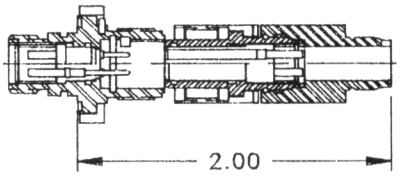

In-line

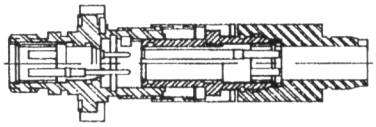

Key

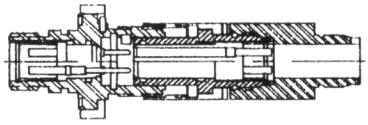

Thread

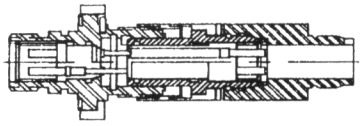

Pins

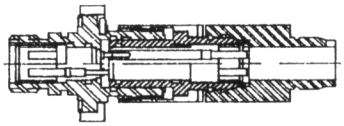

O-ring

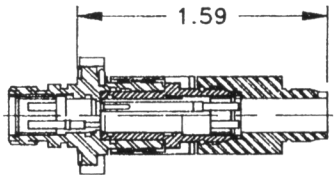

Complete



Notes: Maximum contact density is shown.
Fiber Optic availability on all sizes. ● = Valve, PBOF

SEA CON® A

OIL FIELD CONNECTORS

SEA CON® / Brantner & Associates has been successful on the oil patch for many years. We are active in providing connectors and cable assemblies for downhole tools, subsea wellhead control systems, and offshore platform monitoring systems. Most ROV's in the offshore community contain SEA CON® products.

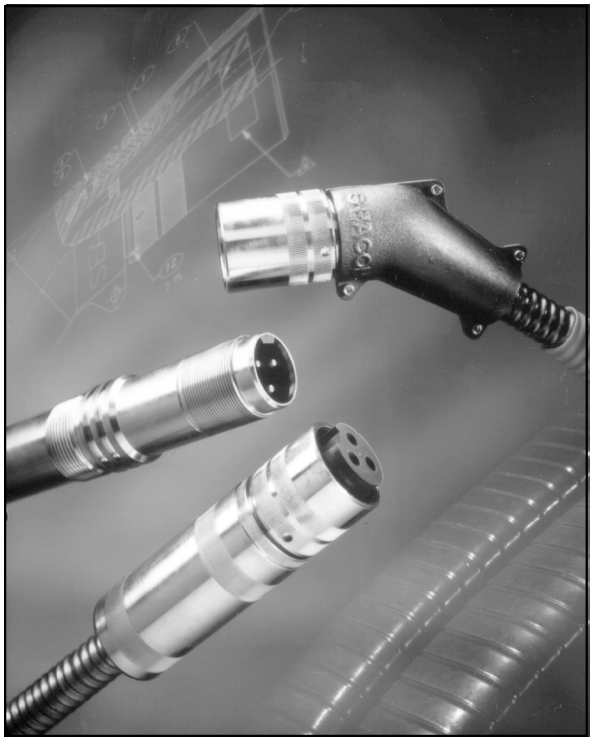

One noteworthy development in the oil patch was to make the subsea control cable for ABB Vetco. Their requirements were handled successfully and the cables were then sold to Petrobras.

A solid background and reputation for quality provide us with a strong foundation in extending this expertise to Electrical Submersible Pump wellhead feed-through products.

FMC APPROVED EXPLOSION PROOF
Our oil field connector series has successfully completed a series of rigorous tests in order to meet Factory Mutual's specifications for explosion proof. To pass these tests several things must be accomplished.

Rubber must be self extinguishing within a brief period should it be exposed to a fire. The connector must not lose its electrical or mechanical properties when exposed to a series of six (6) chemicals. The connector is 'rained' on, heated at 250ºF for 14 days, and pressure tested at 2 1/2 times its rated pressure. Once complete, if successful, they attempt to pull the cable out of the connector and impact it with weight to see if an electrical short will occur internally.

Provided all is still successful, they subject the connector to a series of ten (10) consecutive internal explosions to ensure it does not lose its ability to prevent an exterior explosion. The connector plug is disconnected halfway, filled with an explosive gas, put in a chamber filled with the same gas, and the gas inside the connector is ignited. The resulting explosion inside must not ignite the gas outside of the connector. The test is repeated ten (10) times in rapid succession.

Finally, if everything is successful, the connector is tested at 170 amps until the external temperature stabilizes. This temperature cannot exceed the auto-ignition temperature of the explosive gas used in the explosion tests.

If any of these tests create an unsafe condition the product is rejected and must be redesigned.
Our connectors passed the first time!

FM

APPROVED

PART NUMBERING SYSTEM
CABLE CONNECTORS

P S X F - 22 - A XXX

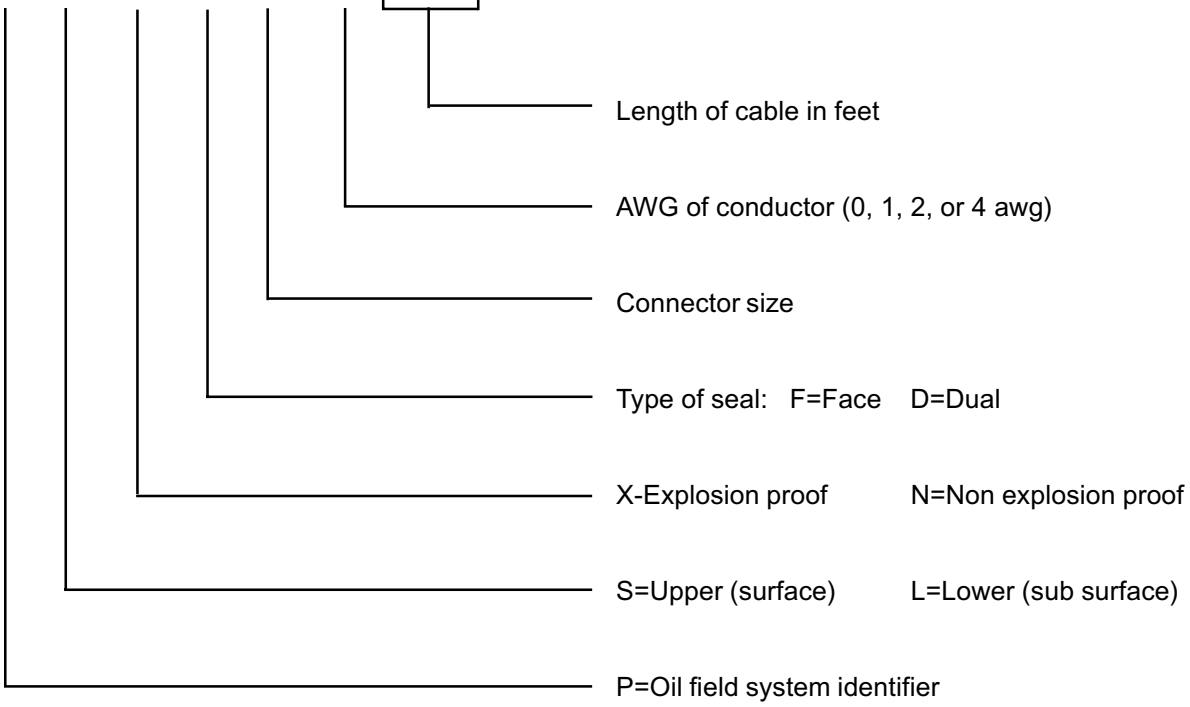

In addition to the above part number, you must specify the cable to be used. Describe the cable by manufacturer, manufacturer's part number, and awg. Galvanized steel armor will be used unless other wise specified.

EXCEPTION: The explosion proof upper connectors will have a cable approved for use in a Class 1 Division 2 location.

The SEA CON® ESP connector series number is the approximate size of the coupling thread 1/10 of a inch. Size 22 is commonly used worldwide, and measures at 22/10 or 2.2 inches. The exact size is 2.1875 inches. Each size is available in a face seal version which uses 2.1875 - 12 vee threads, or a dual seal version which uses 2.1875 - 12 stub acme threads. Size 24 dual seal is also available and other sizes will become available as customer demand warrants them.

PENETRATORS

P M N D - 22 - XXXX

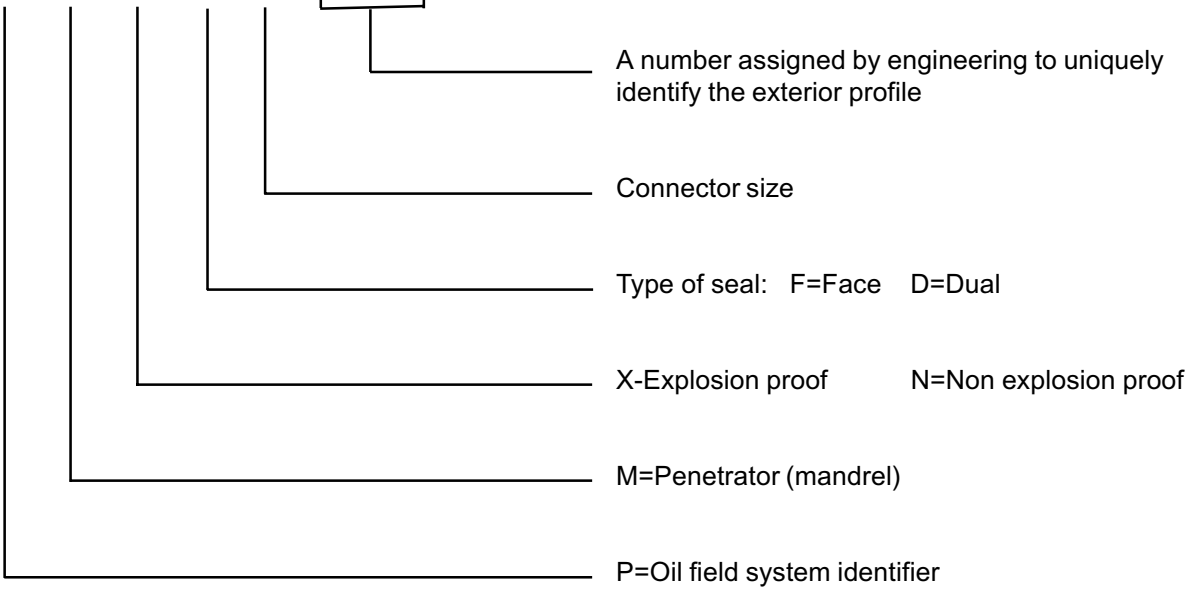

EXPLODED VIEW OIL FIELD CONNECTOR

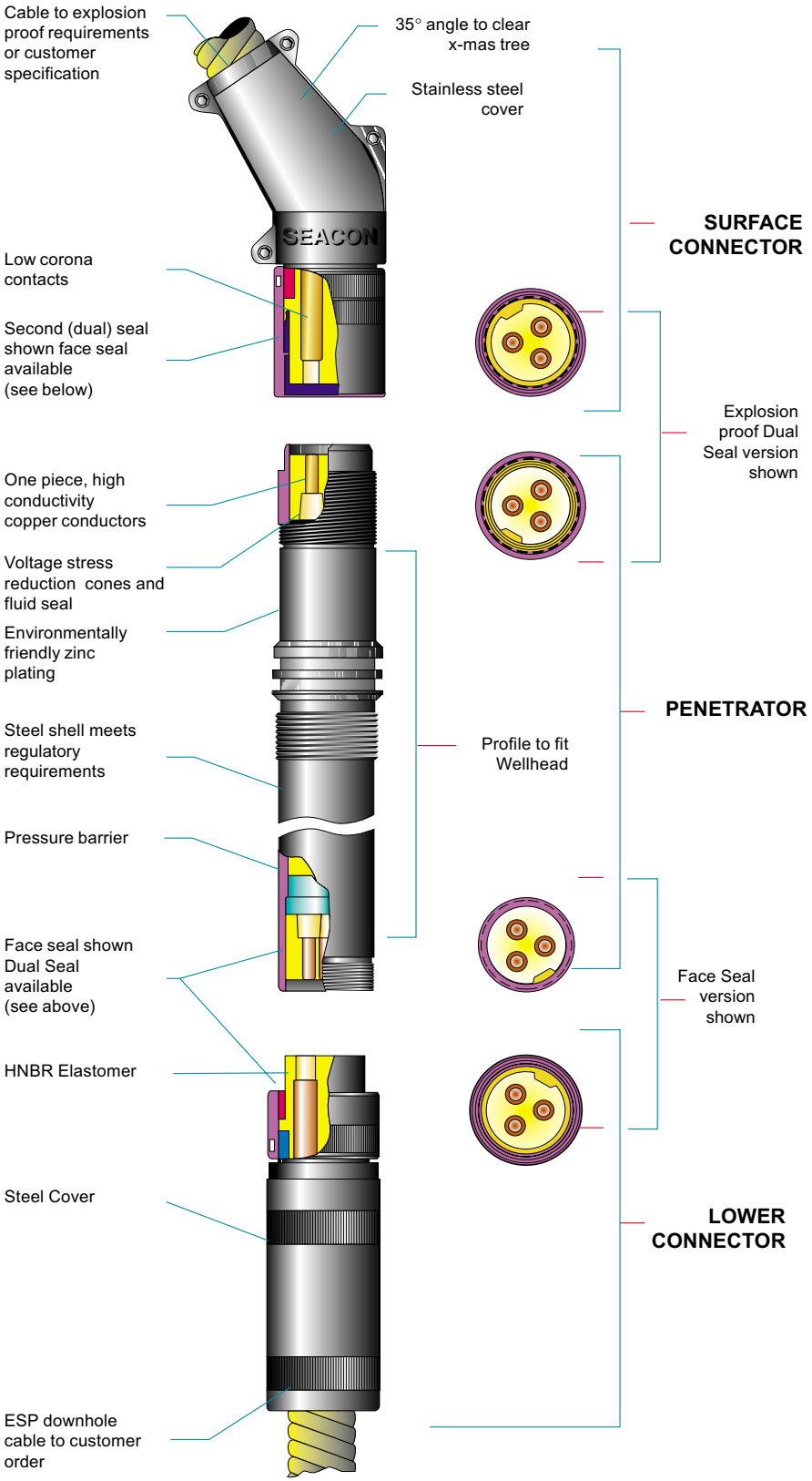

SURFACE CONNECTOR, EXPLOSION PROOF, DUAL SEAL, SIZE 22
(PSXD-22-YXXX)

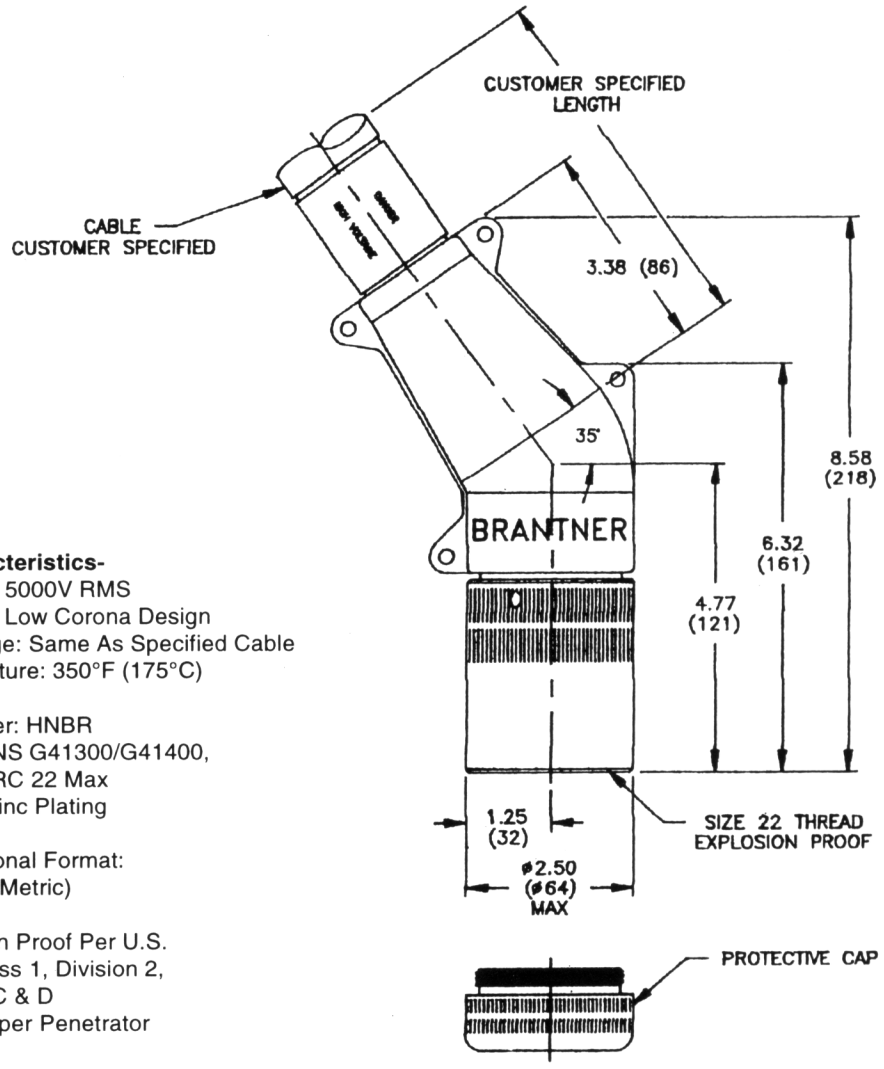

FM APPROVED

Operating Characteristics-
- Voltage: 5000V RMS
  Low Corona Design
- Amperage: Same As Specified Cable
- Temperature: 350°F (175°C)

Material-
- Elastomer: HNBR
- Steel: UNS G41300/G41400, HRC 22 Max
- Finish: Zinc Plating

Dimensions-
- Dimensional Format: English (Metric)

Specifications-
- Explosion Proof Per U.S. NEC Class 1, Division 2, Groups C & D With Proper Penetrator

Many operators prefer the robust strength of the dual seal. The dual seal version is recognized by the smoooth cylinder above the 2 -3/16 - 12 stub-acme threads, as well as the two knurled rings on the coupling nut.

The surface connector (pigtail) is factory molded with a custom compound HNBR elastomer which is resistant to CH_3, CO_2, and H_2S. This connector is designed to eliminate partial electrical discharges and be free of air pockets. Each connector has a corrosion resistant steel cover to protect the elastomer from accidental damage. There are locking screws which prevent vibrations from loosening the connection. Contacts have a minimum ampacity of 1-1/2 times that of the conductor. Our state-of-the-art design maximizes the life of the connector.

SEACON A

SURFACE CONNECTOR, EXPLOSION PROOF, DUAL SEAL, SIZE 24
(PTXD-24-YXXX)

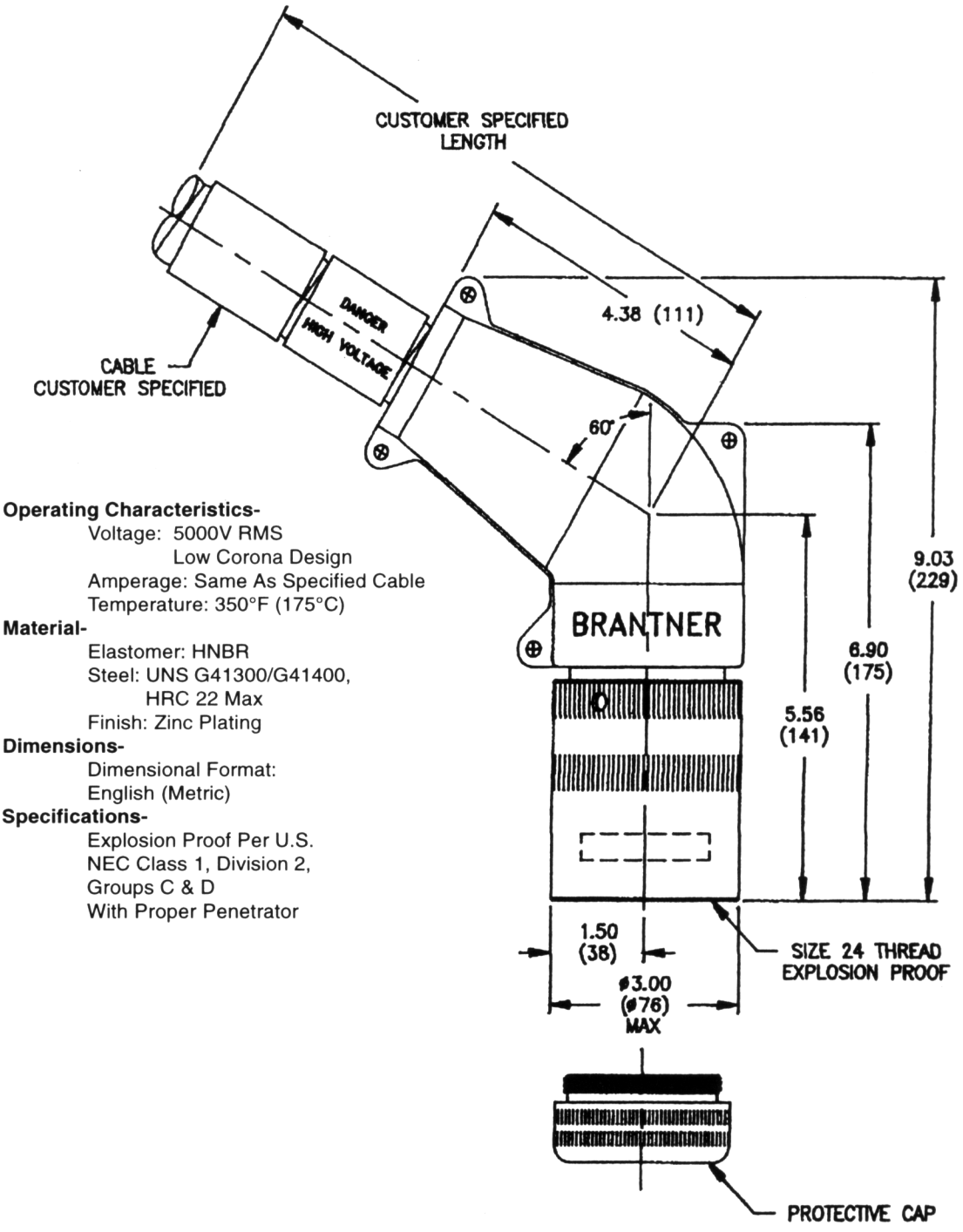

Operating Characteristics-
- Voltage: 5000V RMS
  Low Corona Design
- Amperage: Same As Specified Cable
- Temperature: 350°F (175°C)

Material-
- Elastomer: HNBR
- Steel: UNS G41300/G41400,
  HRC 22 Max
- Finish: Zinc Plating

Dimensions-
- Dimensional Format:
  English (Metric)

Specifications-
- Explosion Proof Per U.S.
  NEC Class 1, Division 2,
  Groups C & D
  With Proper Penetrator

FM
APPROVED

SEA CON A

SURFACE CONNECTOR, NORMAL, DUAL SEAL, SIZE 22
(PSND-22-YXXX)

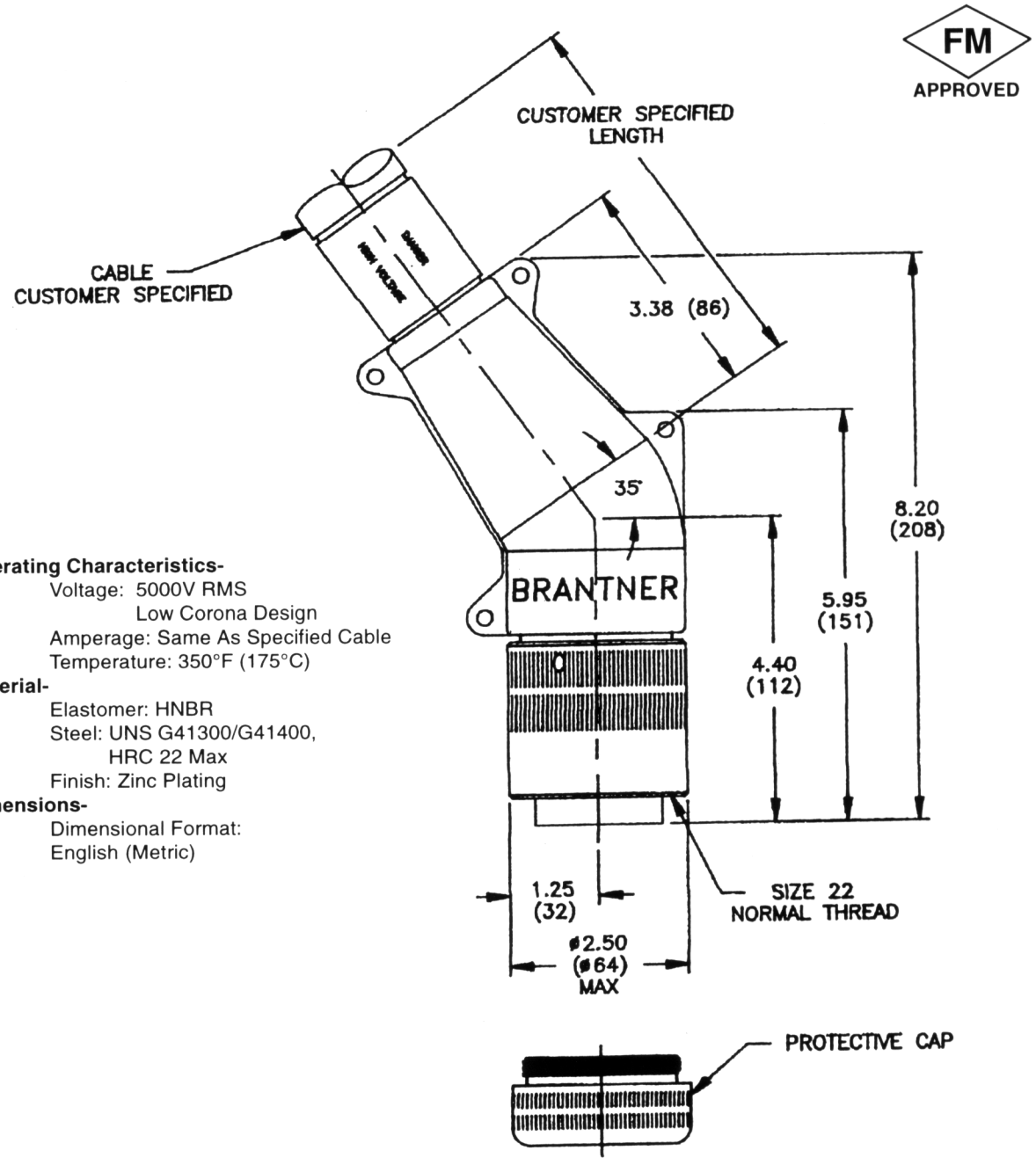

Operating Characteristics-

Voltage: 5000V RMS
Low Corona Design
Amperage: Same As Specified Cable
Temperature: 350°F (175°C)

Material-

Elastomer: HNBR
Steel: UNS G41300/G41400,
HRC 22 Max
Finish: Zinc Plating

Dimensions-

Dimensional Format:
English (Metric)

SEA CON A

SURFACE CONNECTOR, EXPLOSION PROOF, FACE SEAL, SIZE 22
(PSXF-22-YXXX)

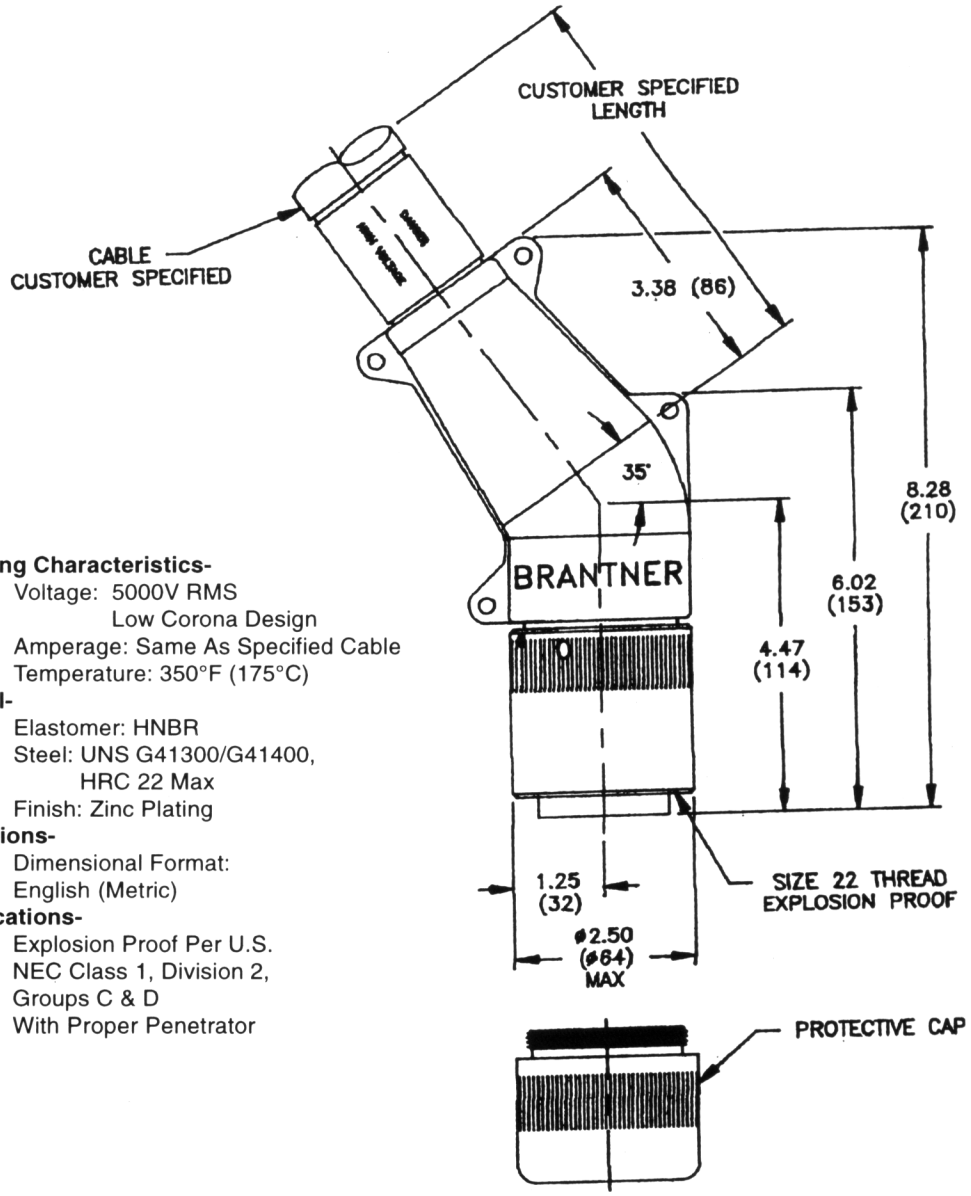

FM APPROVED

Operating Characteristics-
- Voltage: 5000V RMS
  Low Corona Design
- Amperage: Same As Specified Cable
- Temperature: 350°F (175°C)

Material-
- Elastomer: HNBR
- Steel: UNS G41300/G41400, HRC 22 Max
- Finish: Zinc Plating

Dimensions-
- Dimensional Format: English (Metric)

Specifications-
- Explosion Proof Per U.S. NEC Class 1, Division 2, Groups C & D With Proper Penetrator

Both the explosion proof and non-explosion proof designs appear similiar; however, the extension of the coupling nut thread on the explosion proof version set them apart.

The face seal connector has a successful history. It uses 2 3/16 - 12 vee threads and is quickly recognized by the single knurled ring on the coupling nut. Like the dual seal version, the face seal upper connector is factory molded with a custom compound HNBR elastomer. It is resistant to CH_3, CO_2, and H_2S. To prolong life, this connector was designed to eliminate partial electrical discharges and be free of air pockets. A corrosion resistant steel cover protects the elastomer from unnecessary damage. The locking screws ensure against the connection becoming loose. The ampacity of the connector is 1 1/2 times that of the conductor.

SEA CON A

SURFACE CONNECTOR, NORMAL, FACE SEAL, SIZE 22
(PSNF-22-YXXX)

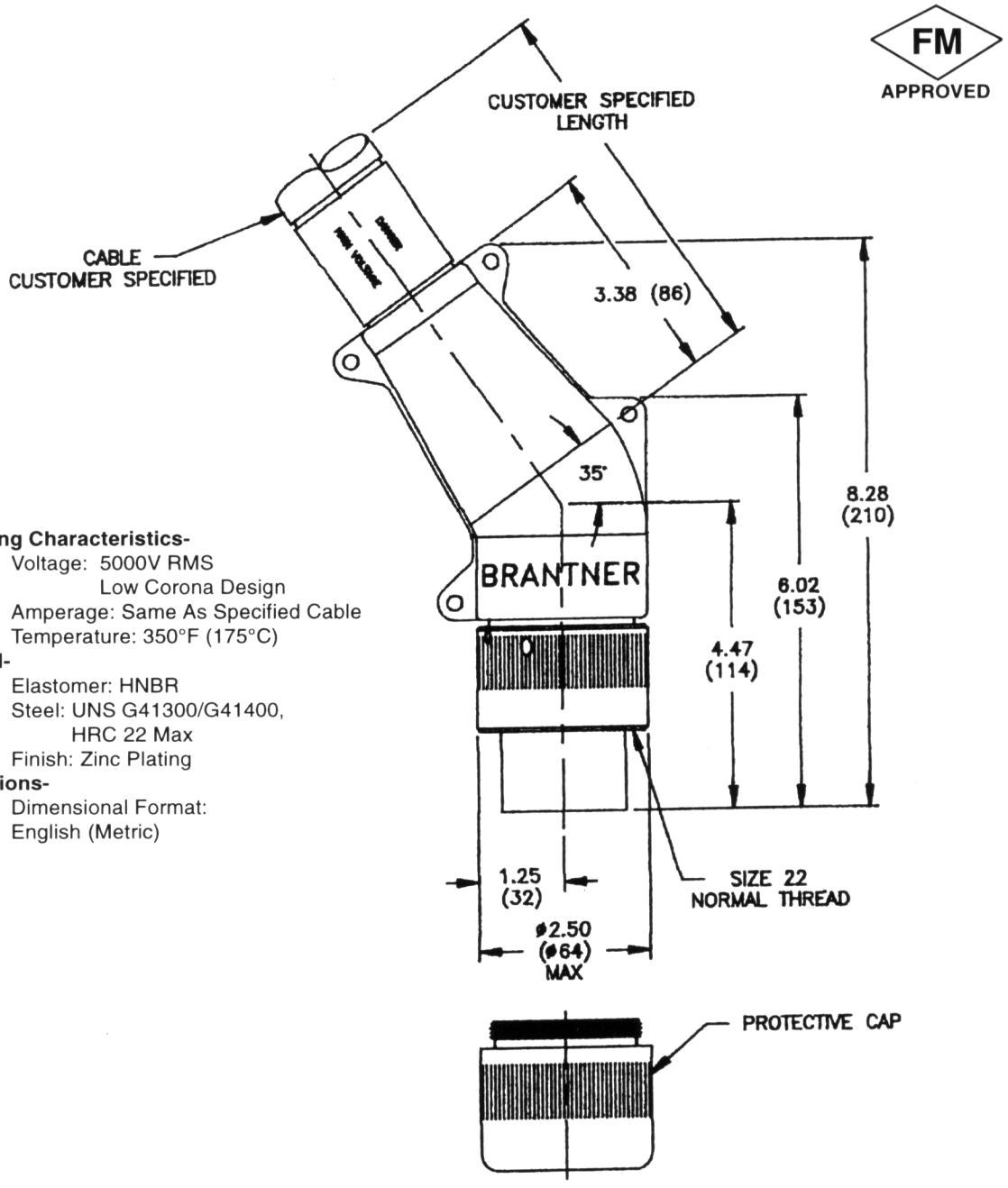

Operating Characteristics-

Voltage: 5000V RMS
Low Corona Design
Amperage: Same As Specified Cable
Temperature: 350°F (175°C)

Material-

Elastomer: HNBR
Steel: UNS G41300/G41400,
HRC 22 Max
Finish: Zinc Plating

Dimensions-

Dimensional Format:
English (Metric)

SEACON® A

PENETRATOR, EXPLOSION PROOF, DUAL SEAL, SIZE 22
(PMXD-22-0011)

Operating Characteristics-
Voltage: 5000V RMS
Low Corona Design
Amperage: 170 A/Phaze
Temperature: 350°F (175°C)
Pressure: 5000 PSIG
(34.5 M-Pa)

Material-
Elastomer: HNBR
Steel: UNS G41300/G41400,
HRC 22 Max
Finish: Zinc Plating

Dimensions-
Dimensional Format:
English (Metric)

Specifications-
NACE International MP0175
API SPEC 6A
Explosion Proof Per U.S.
NEC Class 1, Division 2,
Groups C & D

FM
APPROVED

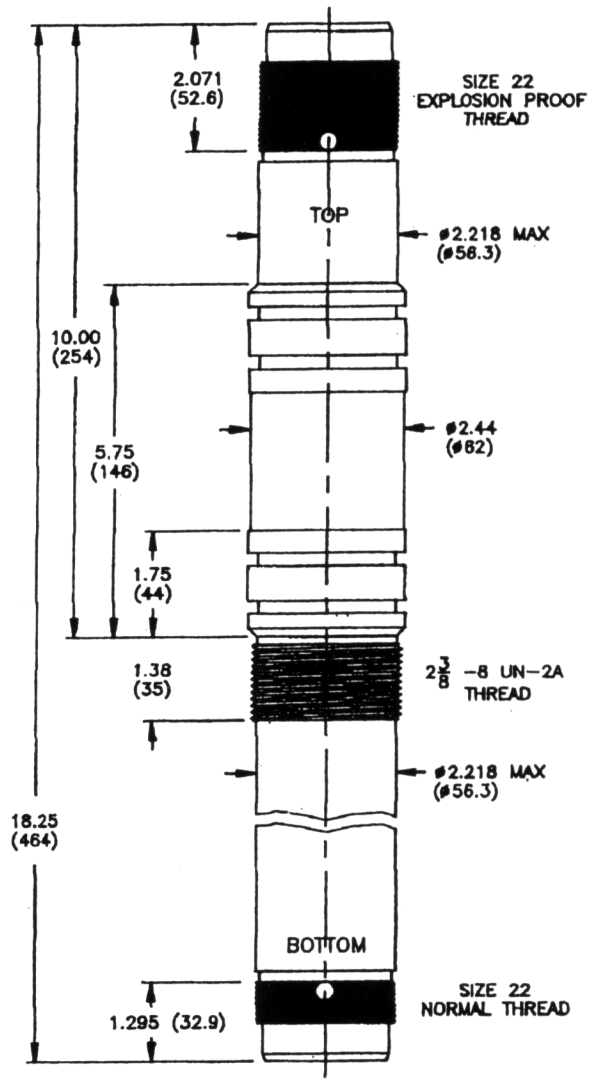

Notice that the explosion proof version contains a longer thread length on the coupling nut; thus, making it easy to distinguish between the explosion proof and non-explosion proof design.

SEA CON®'s wellhead penetrators (mandrels) are designed to the latest specifications. The steel body is heat treated to a minimum tensile yield strength of 75,000 psi to resist well pressure; and it has a Rockwell C hardness of 22 or less to resist H_2S corrosion. The steel is tough at low temperatures with a charpy impact strength of 15 ft.-lbs. minimum at -75°F and 31ft.-lbs. minimum at -20°F. The mandrels are environmentally friendly, zinc plated. Internally the design resists open-face pressures of 5000 psig applied to the lower end. The contacts are designed to eliminate partial electrical discharges. All components used are rated at an operating temperature of 350°F or more. A custom compound HNBR is used which provides maximum resistance to well fluids combined with excellent electrical properties.

SEA CON A

PENETRATOR, EXPLOSION PROOF, DUAL SEAL, SIZE 24
(PMXD-24-0010)

Operating Characteristics-

Voltage: 5000V RMS
Low Corona Design
Amperage: 170 A/Phaze
Temperature: 350°F (175°C)
Pressure: 5000 PSIG
(34.5 M-Pa)

Material-

Elastomer: HNBR
Steel: UNS G41300/G41400,
HRC 22 Max
Finish: Zinc Plating

Dimensions-

Dimensional Format:
English (Metric)

Specifications-

NACE International MP0175
API SPEC 6A
Explosion Proof Per U.S.
NEC Class 1, Division 2,
Groups C & D

FM
APPROVED

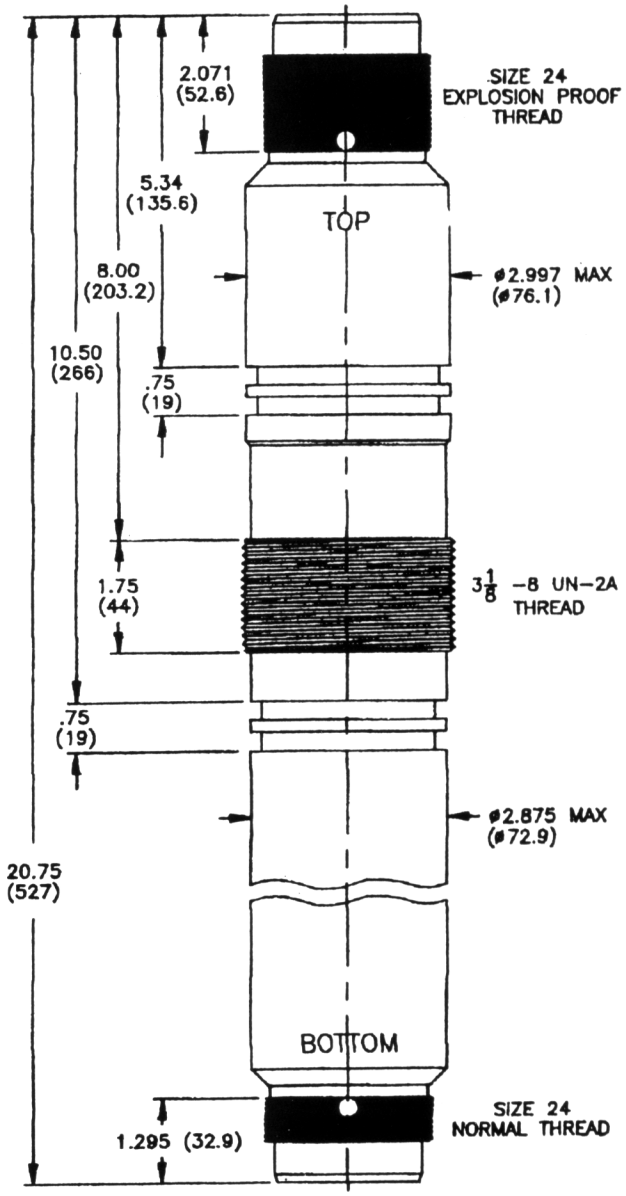

SEACON A

PENETRATOR, EXPLOSION PROOF, DUAL SEAL, SIZE 24
(PMXD-24-0015)

Operating Characteristics-

Voltage: 5000V RMS
Low Corona Design
Amperage: 170 A/Phaze
Temperature: 350°F (175°C)
Pressure: 5000 PSIG
(34.5 M-Pa)

Material-

Elastomer: HNBR
Steel: UNS G41300/G41400,
HRC 22 Max
Finish: Zinc Plating

Dimensions-

Dimensional Format:
English (Metric)

Specifications-

NACE International MP0175
API SPEC 6A
Explosion Proof Per U.S.
NEC Class 1, Division 2,
Groups C & D

FM
APPROVED

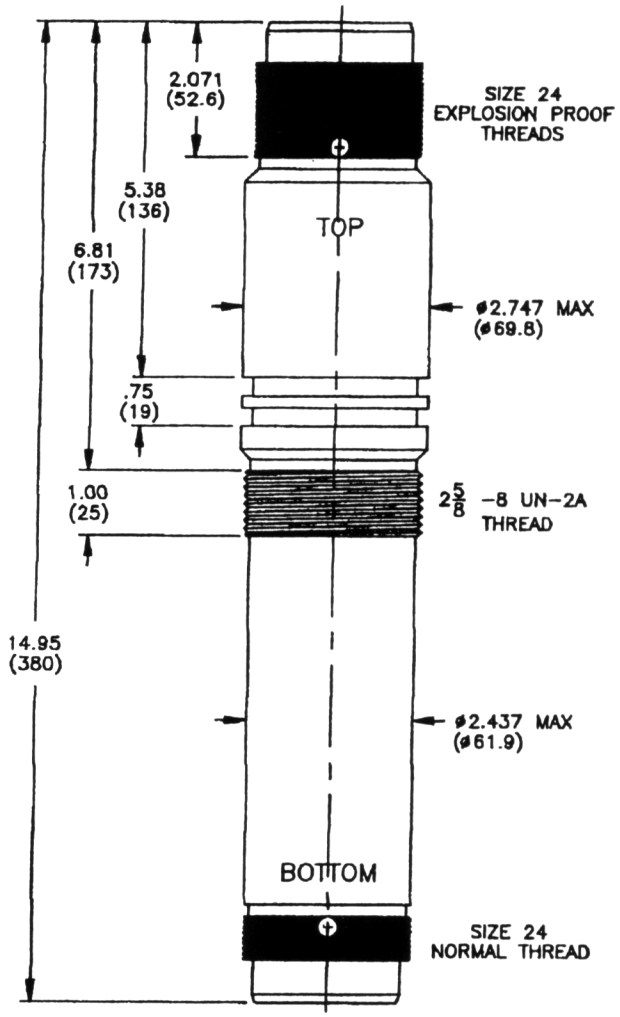

SEA CON A

PENETRATOR, NORMAL, DUAL SEAL, SIZE 24
(PMND-24-0014)

Operating Characteristics-

Voltage: 5000V RMS
Low Corona Design
Amperage: 170 A/Phaze
Temperature: 350°F (175°C)
Pressure: 5000 PSIG
(34.5 M-Pa)

Material-

Elastomer: HNBR
Steel: UNS G41300/G41400,
HRC 22 Max
Finish: Zinc Plating

Dimensions-

Dimensional Format:
English (Metric)

Specifications-

NACE International MP0175
API SPEC 6A

FM
APPROVED

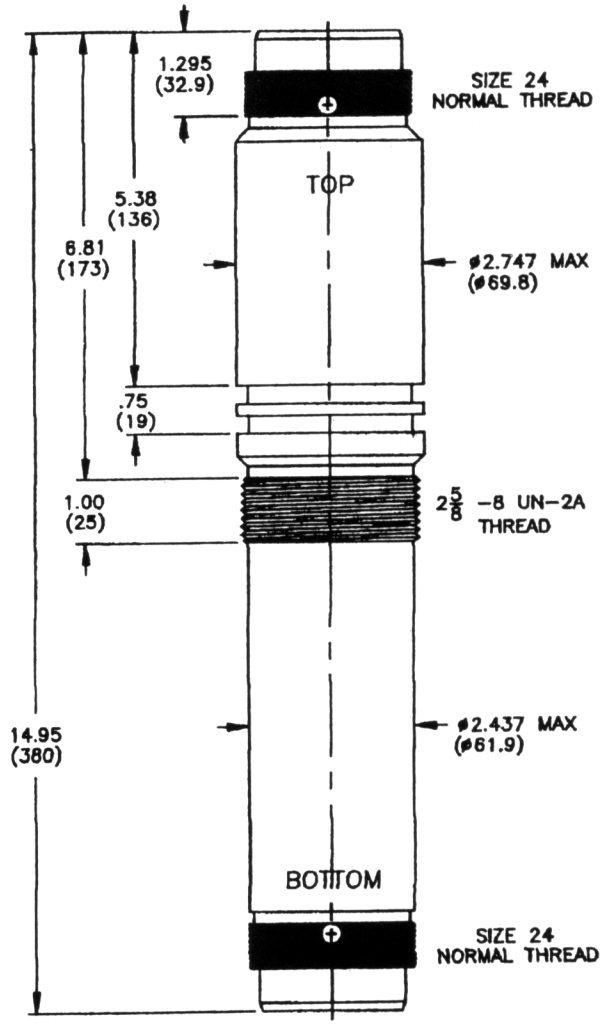

SEA CON A

PENETRATOR, EXPLOSION PROOF, FACE SEAL, SIZE 22
(PMXF-22-0006)

Operating Characteristics-

Voltage: 5000V RMS
Low Corona Design
Amperage: 170 A/Phaze
Temperature: 350°F (175°C)
Pressure: 5000 PSIG
(34.5 M-Pa)

Material-

Elastomer: HNBR
Steel: UNS G41300/G41400,
HRC 22 Max
Finish: Zinc Plating

Dimensions-

Dimensional Format:
English (Metric)

Specifications-

NACE International MP0175
API SPEC 6A
Explosion Proof Per U.S.
NEC Class 1, Division 2,
Groups C & D

FM
APPROVED

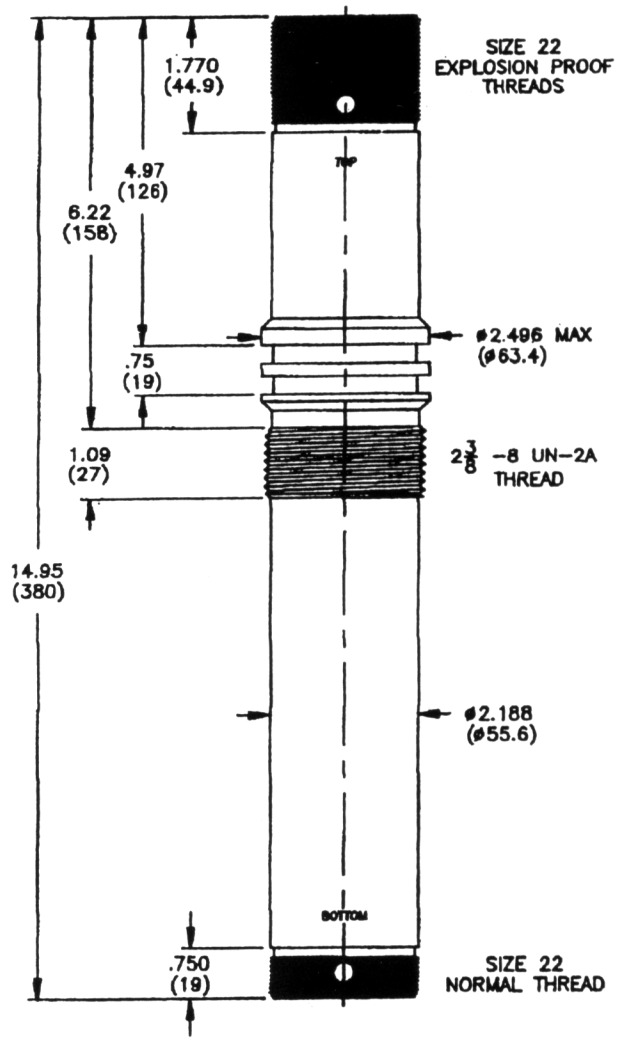

We will design each penetrator to meet customer specifications and offer four styles to satisfy their requirements. The dual seal version comes in explosion and non-explosion proof designs. The dual seal adds a circumferential seal to the face seal for redundancy. The explosion proof design is characterized by the longer thread length.

The face seal version has a long history of success; it comes in both explosion proof and non-explosion proof designs. On the face seal, primary sealing is on the flat face of the penetrator. Once again, the explosion proof design is recognized by the longer thread length.

SEA CON A

PENETRATOR, NORMAL, FACE SEAL, SIZE 22
(PMNF-22-0008)

Operating Characteristics-
Voltage: 5000V RMS
Low Corona Design
Amperage: 170 A/Phaze
Temperature: 350°F (175°C)
Pressure: 5000 PSIG
(34.5 M-Pa)

Material-
Elastomer: HNBR
Steel: UNS G41300/G41400,
HRC 22 Max
Finish: Zinc Plating

Dimensions-
Dimensional Format:
English (Metric)

Specifications-
NACE International MP0175
API SPEC 6A

FM
APPROVED

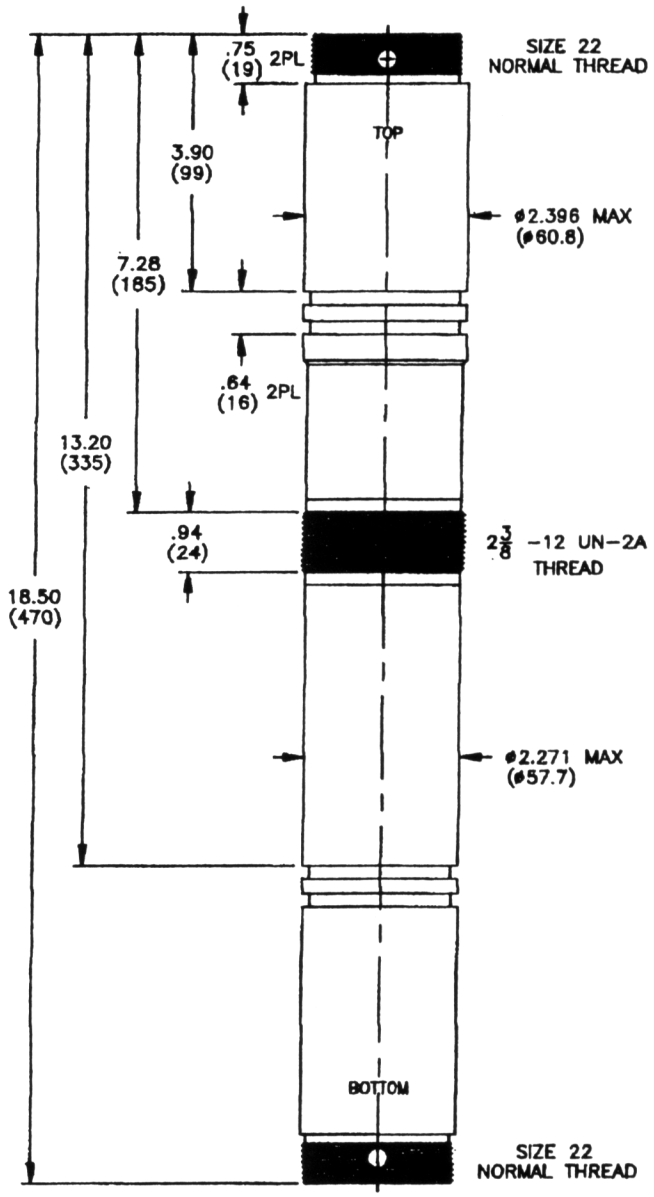

SEA CON A

LOWER CONNECTOR, DUAL SEAL, SIZE 22
(PLND-22-YXXX)

Operating Characteristics-

Voltage: 5000V RMS
Low Corona Design
Amperage: Same as Specified Cable
Temperature: 350°F (175°C)
Pressure: 5000 PSIG
(34.5 M-Pa)

Material-

Elastomer: HNBR
Steel: UNS G41300/G41400,
HRC 22 Max
Finish: Zinc Plating

Dimensions-

Dimensional Format:
English (Metric)

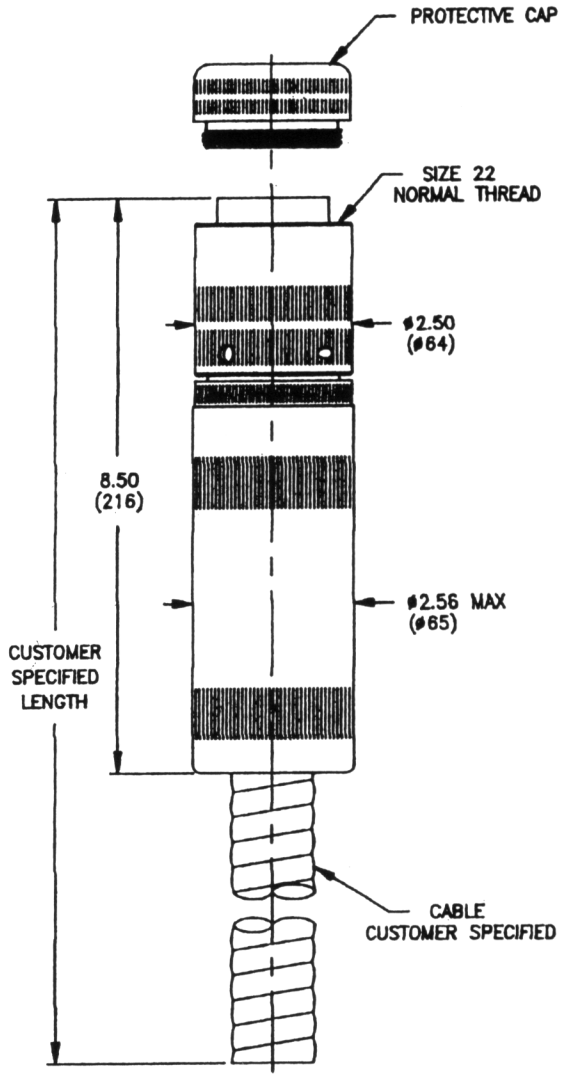

All components and design work used on the face seal version are exact to the dual seal. For further detail please see previous page.

SEA CON® lower connectors (pigtails) are of all-molded construction to eliminate partial electrical discharges that can occur if air pockets exist within the connector. The elastomer is an HNBR compound that is custom formulated for oil field service in the lower connectors. It is resistant to CH_3, CO_2, and H_2S. The lower connector is completely encased in steel to protect it from accidental damage during handling, and to contain the elastomer. The armor is grounded to the shell to ensure reliable electrical testing. The contacts have a minimum rated ampacity 1 1/2 times the ampacity of the cable attached, thus, reducing heat and prolonging life. The connector can operate at temperatures of 350°F or more.

The dual seal lower connector has two rows of knurling on the coupling nut while the face seal connector has one row of knurling.

The customer must specify the cable to be used.

SEA CON A

LOWER CONNECTOR, DUAL SEAL, SIZE 24
(PLND-24-YXXX)

Operating Characteristics-

Voltage: 5000V RMS
Low Corona Design
Amperage: Same as Specified Cable
Temperature: 350°F (175°C)
Pressure: 5000 PSIG
(34.5 M-Pa)

Material-

Elastomer: HNBR
Steel: UNS G41300/G41400,
HRC 22 Max
Finish: Zinc Plating

Dimensions-

Dimensional Format:
English (Metric)

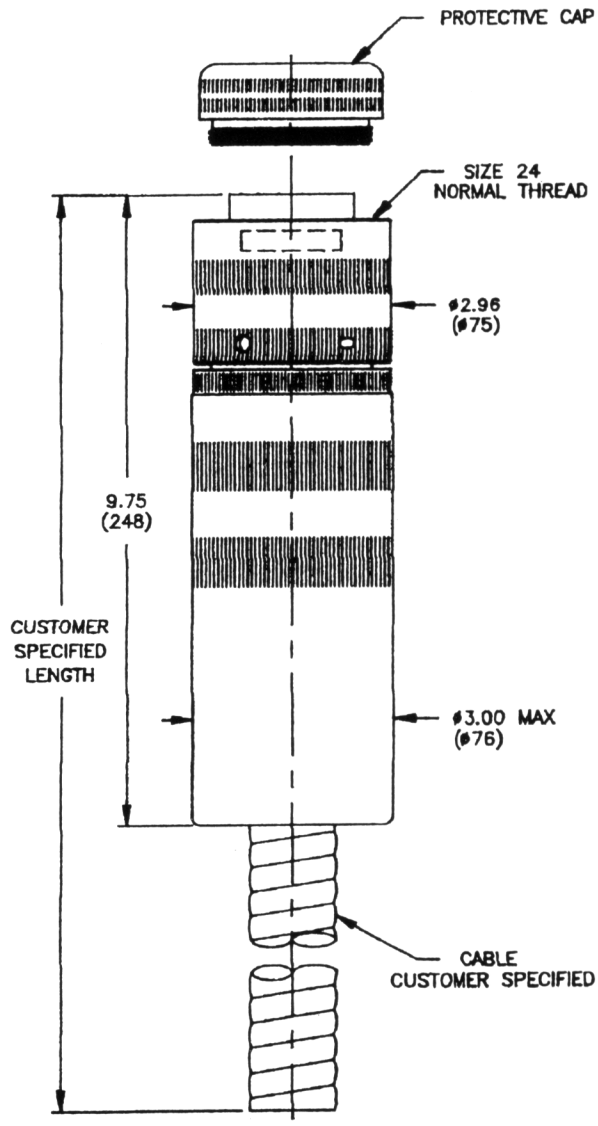

SEA CON A

LOWER CONNECTOR, FACE SEAL, SIZE 22
(PLNF-22-YXXX)

Operating Characteristics-

Voltage: 5000V RMS
Low Corona Design
Amperage: Same as Specified Cable
Temperature: 350°F (175°C)
Pressure: 5000 PSIG
(34.5 M-Pa)

Material-

Elastomer: HNBR
Steel: UNS G41300/G41400,
HRC 22 Max
Finish: Zinc Plating

Dimensions-

Dimensional Format:
English (Metric)

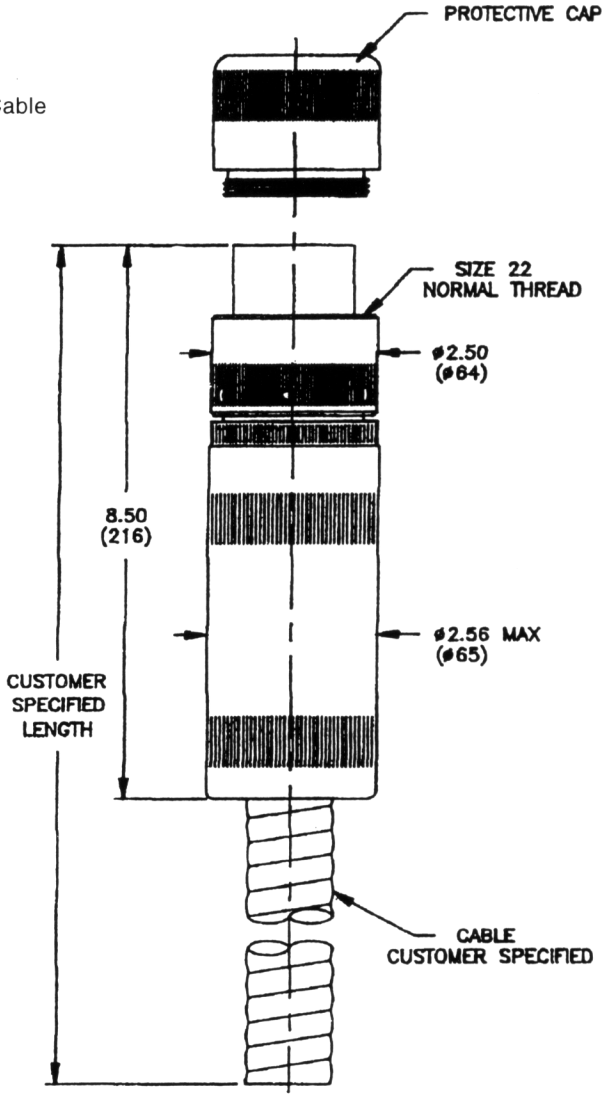

SEA CON A

HEATRACE CONNECTORS



FM
APPROVED

SEA CON® is known for successfully customizing nearly 40% of all orders. Our latest job in the oil patch was to design the wellhead feed-through and connectors for a heatrace cable used in Arctic regions.

This design succeeded in heating the production tubing and preventing paraffin from building up on the tubing I.D. There were 5 each 50 amp contacts required for the cable. The existing wellhead had a 6” tubing hanger and 3 1/2” production tubing. It contained an ESP penetrator, heatrace penetrator, and the production tubing. By working closely with the wellhead manufacturer, we were able to fit it all into the space available.

Although not required at the time of this initial design, the upper connector was designed to be made explosion proof if so required at a later date. It was later repaired and is now approved for use in NEC Class I, Division I, Group C & D hazardous locations.

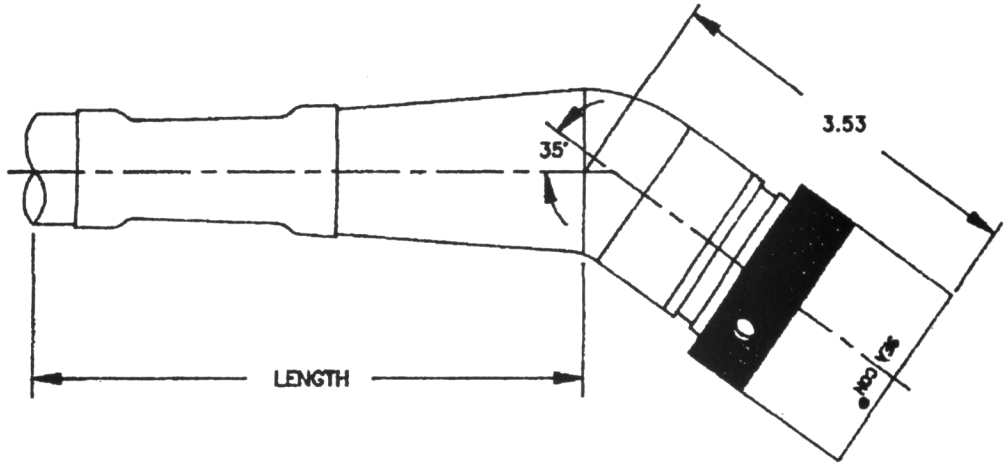

Phase Leg	Blue	1
Phase Leg	Red	2
Phase Leg	Black	3
Neutral	Orange	4
	GRD	5

FM
APPROVED

The connector had to meet the small size available for the penetrator; yet, meet the U.S. National Electrical Code (NEC) for cable ampacity. Two set screws prevent the coupling nut from vibrating loose. A metal cover (not shown) is included on every connector. The cable is a product approved for use in NEC Class 1 Division 2 areas. This is equivalent to EN zone 2 areas.

The proprietary Raychem heatrace cable is a small, flat, armored cable containing a heating element. It uses 440V, 3 phase, 4 wire power. The small connector is in keeping with the small cable and the small tubing hanger.

Proprietary processes developed by SEA CON® for this product bonds the Tefzel® insulated wire inside the cable to the Hypalon elastomer. This process provides a gas tight seal. The bond strength exceeds the tensile strength of the elastomer.



This design was for use in Polar regions; therefore, the steel used in the penetrator body is UNS G41300 or G41400 steel for excellent impact resistance at low temperatures.

The Hypalon elastomer used to seal the ends and provide dielectric strength has been compounded to provide a wide temperature range suitable for the very low temperatures of the Arctic.

The exterior seals are FMC proprietary 'S' seals, made of HNBR elastomer in order to seal the well bore at -70°F.

This penetrator style is sometimes referred to as the "Drop-in" type. This style minimizes the area needed in the tubing hanger. It is held in place by a containment nut on the bottom.

FM
APPROVED

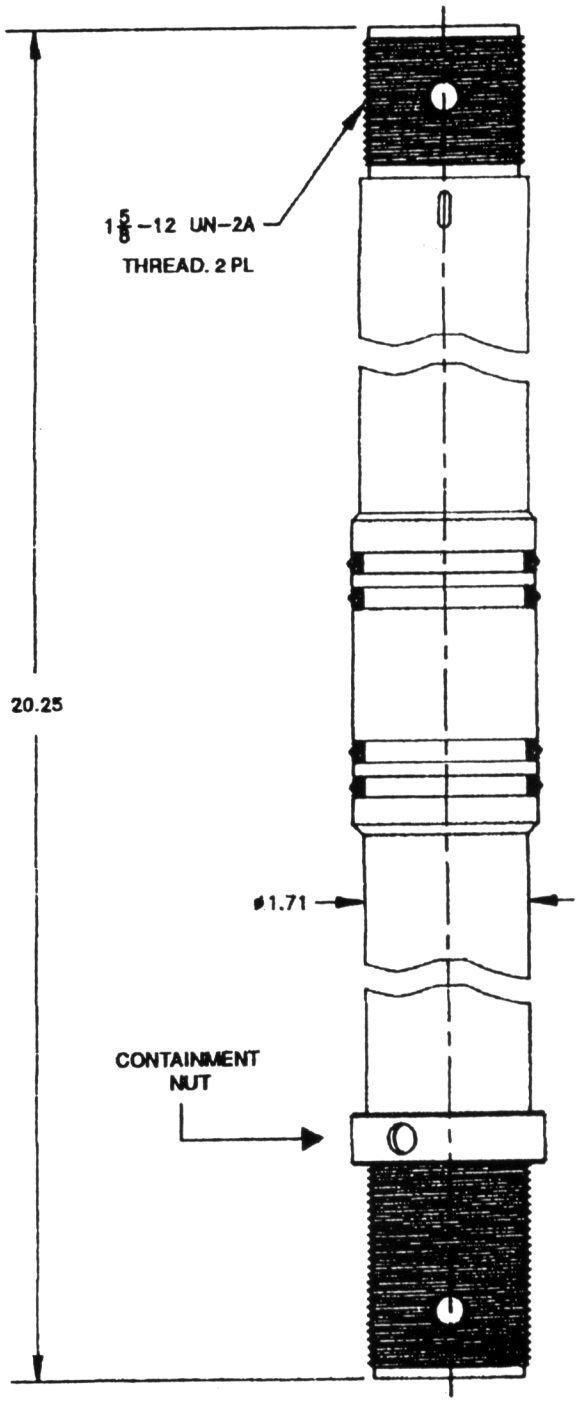

SEA CON A

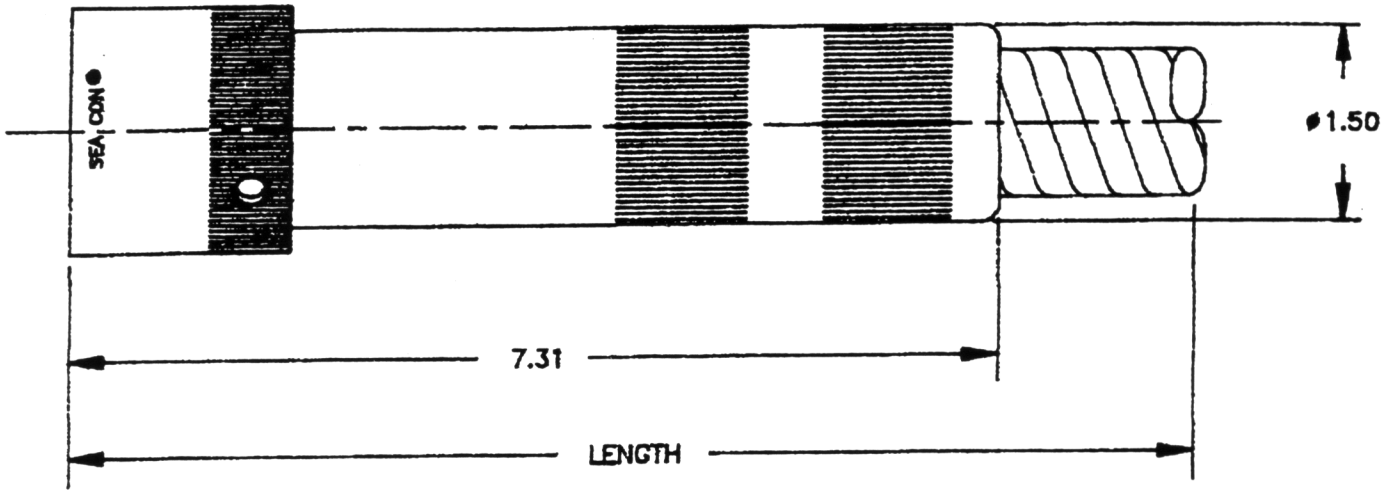

1	Blue	Phase Leg
2	Red	Phase Leg
3	Black	Phase Leg
4	Orange	Neutral
5	GRD	

The proprietary Raychem heatrace cable is a small, flat, armored cable containing a heating element. It uses 440V, 3 phase, 4 wire power. The small connector is in keeping with the small cable and the small tubing hanger.

Proprietary processes developed by SEA CON® for this product bonds the Tefzel® insulated wire inside the cable to the Hypalon elastomer. This process provides a gas tight seal. The bond strength exceeds the tensile strength of the elastomer.

DOWNHOLE TOOL INSERT

SEA CON® has been a supplier of well logging tool connectors for many years. The high reliability, rugged construction and low electrical insertion loss makes them ideal for this application.

Four and seven pin inserts are the most common, and used mainly in open hole logging tools. However, we have provided inserts with as many as nineteen contacts. All contacts are gold plated for low electrical insertion loss.

Our standard glass reinforced epoxy (GRE) series inserts are rated for temperatures to 300°F (149°C). Temperatures as high as 450°F (233°C) can be obtained by using high temperature engineering plastic.

Female inserts are used in multiconductor cable head assemblies with several sizes available. The male inserts are used on various types of tools, such as:

RESISTIVITY TOOLS	**POROSITY TOOLS**
LL3 Guard Tool	Compensated Sonic
Dual	Compensated Density
Dual Laterolog	Compensated Neutron
Dual Induction	Compensated Litho Density

We have several methods of sealing the insert against fluid intrusion, the most common being a boot. These boots are molded of Neoprene, Aflas or HNBR, dependent upon the temperature and aggressiveness of the fluid in the well bore.

Special assemblies can be made for unique applications. We now manufacture 4 and 7 pin compression glass sealed inserts for very high temperature, high pressure (HT/HP) applications.

DOWNHOLE INSERTS

MALE/FEMALE SPECIAL INSERTS

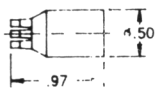

4 PIN BOOT

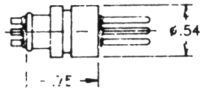

4 PIN MALE CONNECTOR



4 pin glass reinforced epoxy insert. Copper alloy contacts. Optional Aflas boot fits solder cup side on both male and female connector.

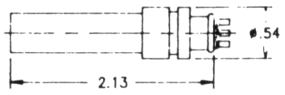

4 PIN FEMALE CONNECTOR

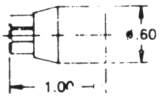

5 PIN BOOT

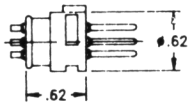

5 PIN MALE CONNECTOR



5 pin glass reinforced epoxy insert. Copper alloy contacts. Optional neoprene boot fits solder cup side on both male and female connector.

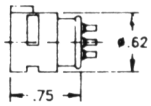

5 PIN FEMALE CONNECTOR

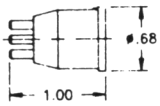

7 PIN BOOT

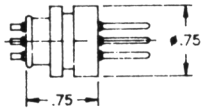

7 & 9 PIN MALE CONNECTORS

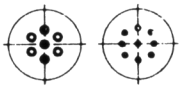

7 PIN 9 PIN

7 & 9 pin glass reinforced epoxy insert. Copper alloy contacts. Optional neoprene or Aflas boot fits solder cup side of both male and female connector.

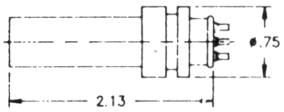

7 & 9 PIN FEMALE CONNECTORS

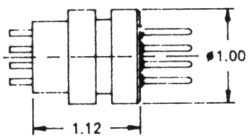

10 PIN MALE CONNECTOR



10 pin glass reinforced epoxy insert. Copper alloy contacts.

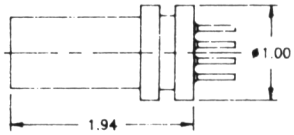

10 PIN FEMALE CONNECTOR

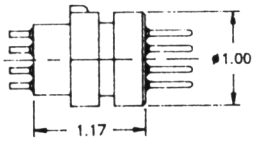

12 PIN MALE CONNECTOR



12 pin glass reinforced epoxy insert. Copper alloy contacts.

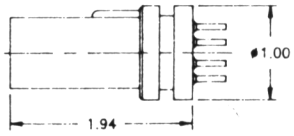

12 PIN FEMALE CONNECTOR

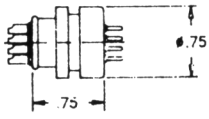

12 PIN SPECIAL MALE CONNECTOR



12 pin glass reinforced epoxy insert with special body. Copper alloy contacts.

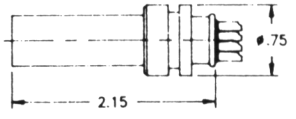

12 PIN SPECIAL FEMALE CONNECTOR

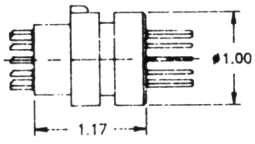

19 PIN MALE CONNECTOR



19 pin glass reinforced epoxy insert. Copper alloy inserts.

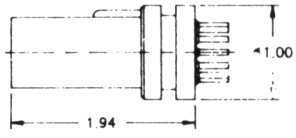

19 PIN FEMALE CONNECTOR

SEA CON A

NON-METALLIC
CONNECTOR SERIES
(Glass Reinforced Epoxy)
VISUAL INDEX

XSJJ SERIES SUPERSEDES THE XSJ SERIES

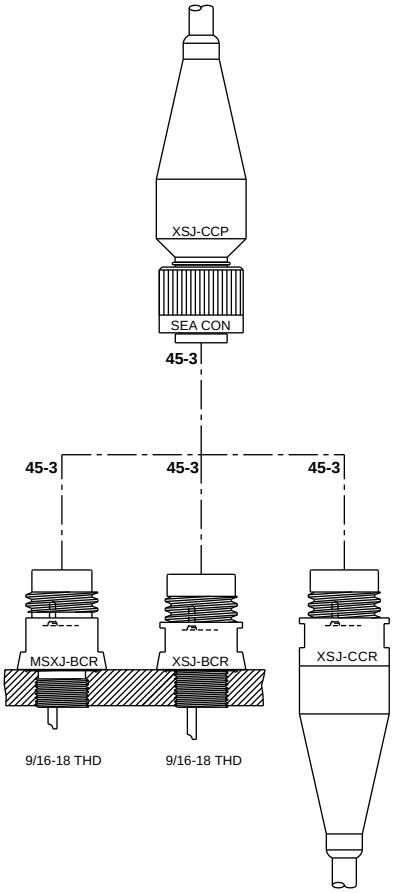

XSEE SERIES SUPERSEDES THE XSE SERIES

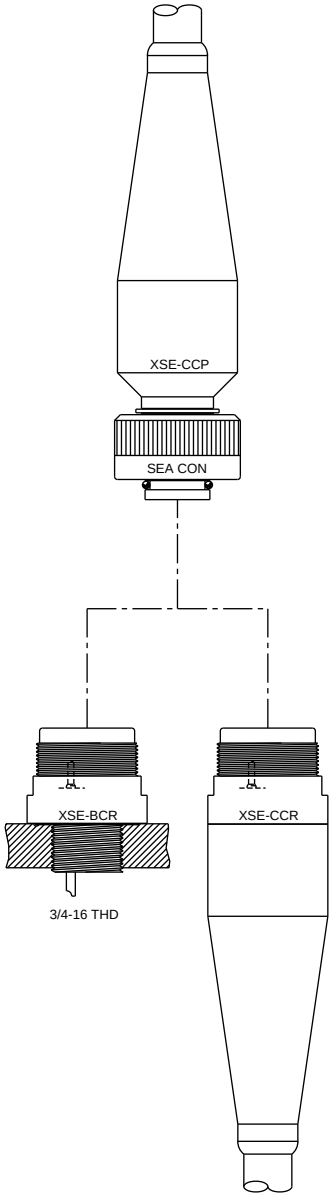

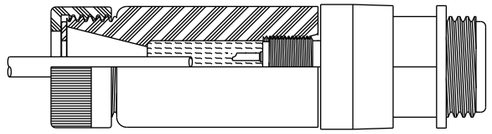

XSL-CCR-FI
45-9

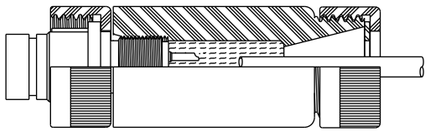

XSL-CCP-FI
45-9

NOTE: Torque values referenced in this literature assume installation into dry metal threads. Please contact the factory for recommendations.

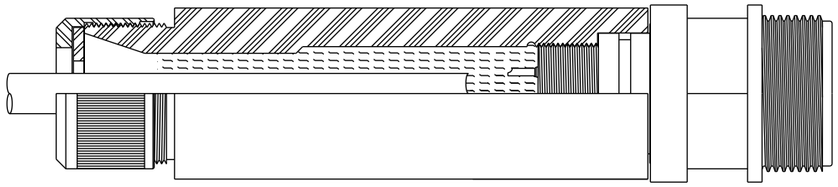

XSM-CCR-FI
45-9

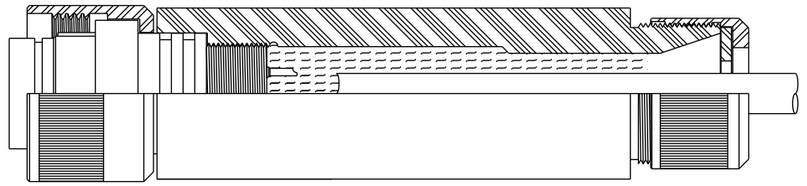

XSM-CCP-FI
45-9

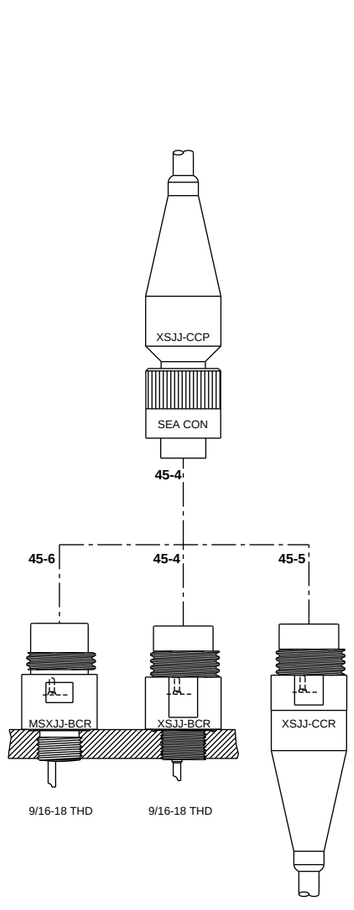

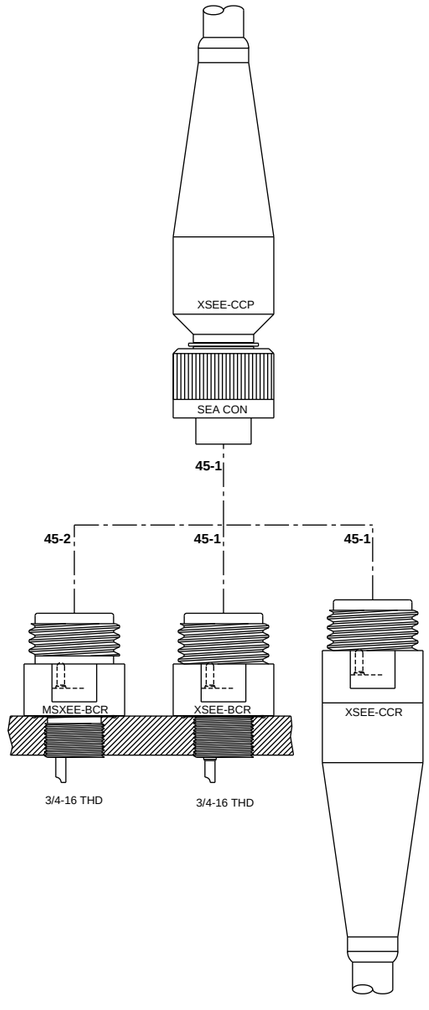

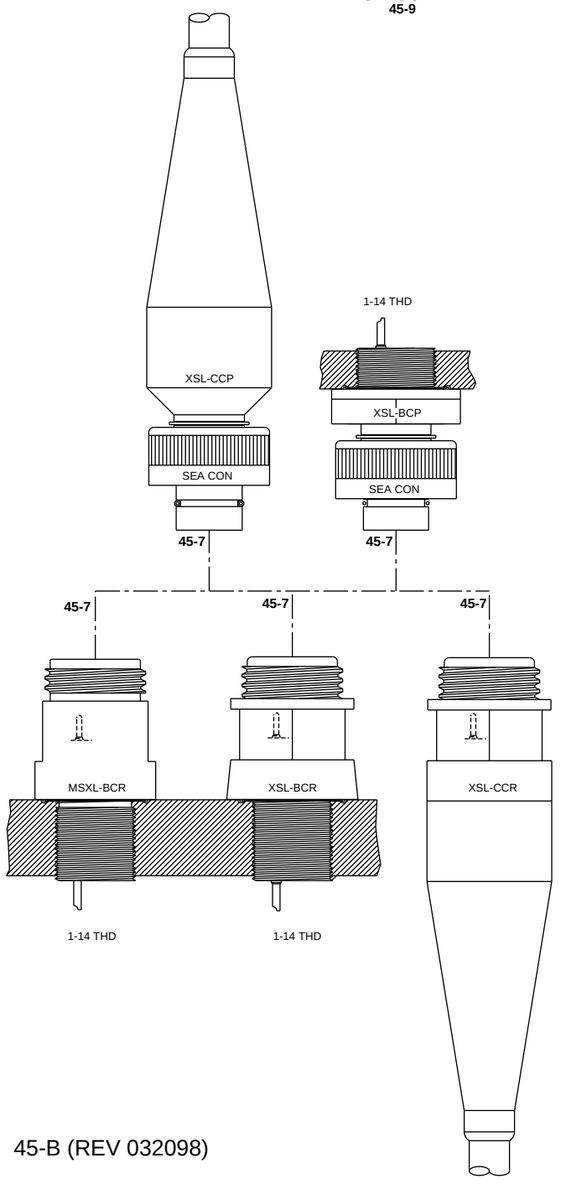

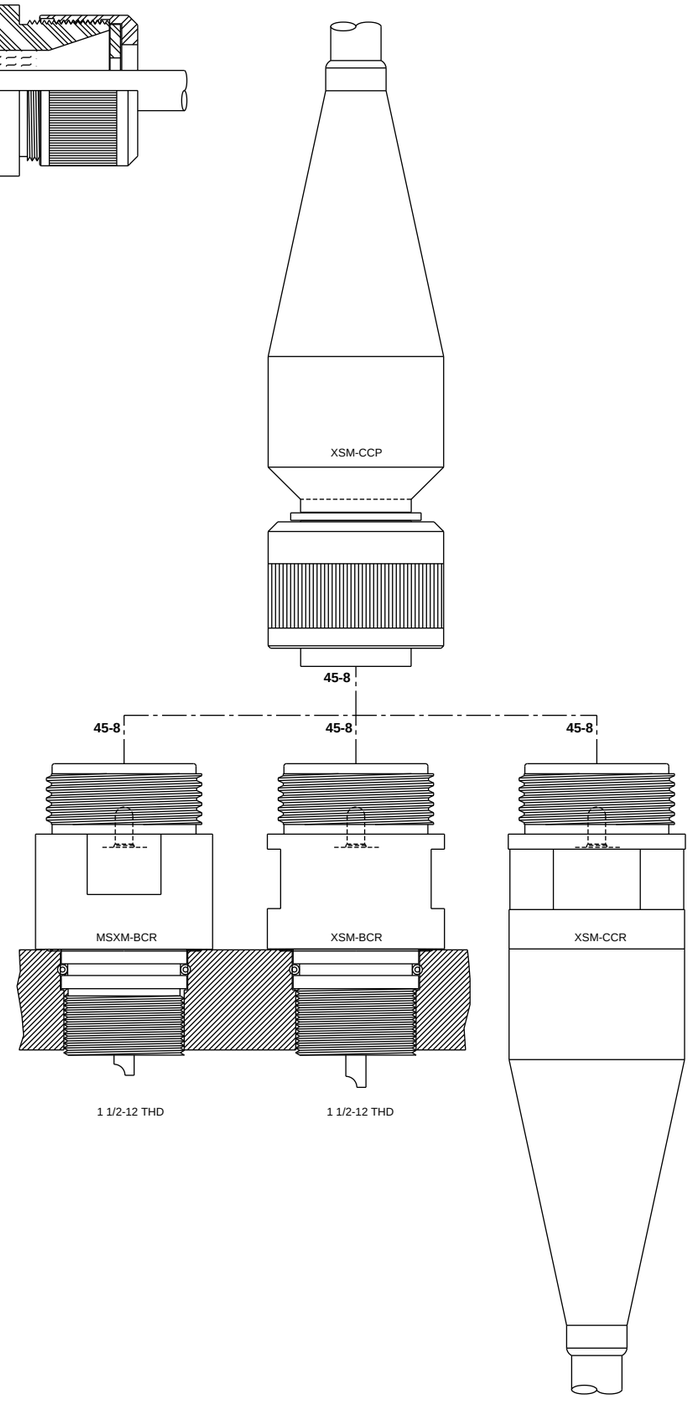

THE FOLLOWING GLASS REINFORCED EPOXY BULKHEAD CONNECTORS CAN BE FOUND IN SECTION 50:

MATES TO RUBBER MOLDED CONNECTORS

XSA-BC, XSA-BCL
XSB-BCL
XSC-BC, XSC-BCL

VSA-BC, VSA-BCL
VSB-BCL
VSC-BC, VSC-BCL

XSF-BC, XSF-BCL
XSFDE-BCL (Formerly XSDE-BCL)

VSF-BCL

LSG-BC, LSG-BCL
LSG-BC HP
LSG-BC SC (Formerly LSK-BC-SC)

XSG-BCL, XSG-BCL-P-R/A
XSG-PBC, XSG-PBCL, XSG-PBCLM

VSG-BCL
VSG-PBC, VSG-PBCL, VSG-PBCLM

XSK-BCL
XSKDE-BCL

VSK-BCL

XSEE SERIES

SUPERCEDES THE XSE SERIES, BUT IS NOT INTERMATABLE

XSEE -BCR

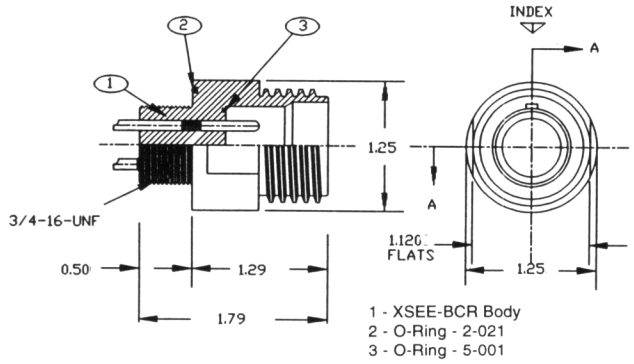

1 - XSEE-BCR Body
2 - O-Ring - 2-021
3 - O-Ring - 5-001

NOTES
1 BODY: GLASS REINFORCED EPOXY 8/A XS-2748
2 CONTACTS: COPPER ALLLOY AND GOLD PLATED PER MIL-G-45204
3 SEE XSEE FACE VIEW FOR CONTACT CONFIGURATIONS
4 O-RING: BUNA-N, 70 DUROMETER
5 MATING CONNECTOR: XSEE-CCP
6 SPECIFICATIONS:
PRESSURE: 10,000 PSI MATED (OPEN FACE OPTIONAL)
TEMPERATURE: -57° C TO +93° C (-70° F TO +200° F)
VOLTAGE: VARIES ACCORDING TO FACE CONFIGURATION (SEE TABLE)
MOUNTING TORQUE - 75 INCH LBS

Voltage Ratio	
Connectors	**Volts DC**
XSEE-C	1000
XSEE-1	1000
XSEE-2	800
XSEE-3	700
XSEE-4	600
XSEE-6	500
XSEE-7	500
XSEE-8	400
XSEE-10	300
XSEE-12	250

XSEE -CCP

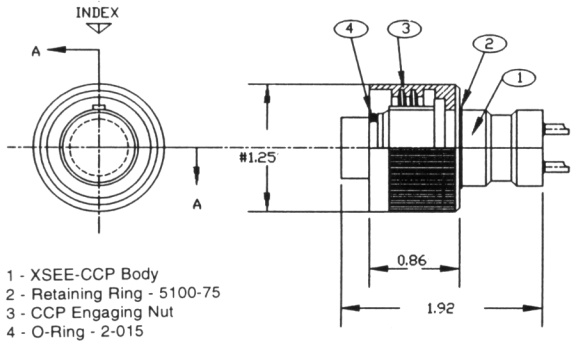

1 - XSEE-CCP Body
2 - Retaining Ring - 5100-75
3 - CCP Engaging Nut
4 - O-Ring - 2-015

NOTES
1 BODY: GLASS REINFORCED EPOXY 8/A XS-2748
2 RETAINING RING: PH 15-7 MO. OR EQUIVALENT SST.
3 ENGAGING NUT: BLACK DELRIN
4 O-RING: BUNA-N, 70 DUROMETER
5 CONTACTS: COPPER ALLOY AND GOLD PLATED PER MIL-G-45204
6 MATING CONNECTOR: XSEE-CCP
7 SPECIFICATIONS:
PRESSURE: 10,000 PSI MATED
TEMPERATURE: -57° C TO +93° C (-70° F TO +200° F)
VOLTAGE: VARIES ACCORDING TO FACE CONFIGURATION (SEE TABLE)

XSEE -CCR

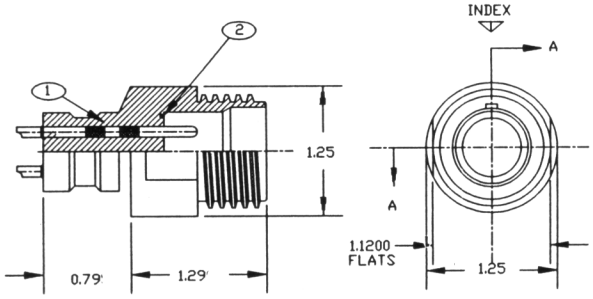

1 - XSEE-CCR Body
2 - O-Ring - 5-001

NOTES
1 BODY: GLASS REINFORCED EPOXY 8/A XS-2748
2 CONTACTS: COPPER ALLLOY AND GOLD PLATED PER MIL-G-45204
3 SEE XSEE FACE VIEW FOR CONTACT CONFIGURATIONS
4 O-RING: BUNA-N, 70 DUROMETER
5 MATING CONNECTOR: XSEE-CCP
6 SPECIFICATIONS:
PRESSURE: 10,000 PSI MATED (OPEN FACE OPTIONAL)
TEMPERATURE: -57° C TO +93° C (-70° F TO +200° F)
VOLTAGE: VARIES ACCORDING TO FACE CONFIGURATION (SEE TABLE)

XSEE-C-BCR XSEE-C-CCR	XSEE-1-BCR XSEE-1-CCR	XSEE-2-BCR XSEE-2-CCR	XSEE-3-BCR XSEE-3-CCR	XSEE-4-C XSEE-4-CCR	XSEE-6-BCR XSEE-6-CCR	XSEE-7-BCR XSEE-7-CCR	XSEE-8-BCR XSEE-8-CCR	XSEE-10-BCR XSEE-10-CCR	XSEE-12-BCR XSEE-12-CCR
									
1 # 22 AWG 20 Ω COAX	1 # 8 AWG	2 # 14 AWG	3 # 14 AWG	4 # 14 AWG	6 # 16 AWG	7 # 16 AWG	8 # 20 AWG	10 # 20 AWG	12 # 20 AWG

NOTE: Torque values referenced in this literature assume installation into dry metal threads. Please contact the factory for recommendations.

NOTE: Torque values referenced in this literature assume installation into dry metal threads. Please contact the factory for recommendations.

MSXEE-BCR

NOTES:

1. MATERIAL: 316 SST PER QQ-S-763; PASSIVATED PER QQ-P-35C; OR ELECTROPOLISHED.
2. MATERIAL: COPPER ALLOY & GOLD PLATED PER MIL-G-45204.
3. MATERIAL: WHITE EPOXY PER B/A 6373.
4. MATERIAL: BUNA-N, 70 DURO.
5. MATERIAL: GLASS REINFORCED EPOXY B/A 2748.
6. SEE MSXEE-BCR FACE VIEW FOR CONTACT CONFIGURATIONS.
7. MATING CONNECTOR: XSEE-CCP
8. SPECIFICATIONS:
   PRESSURE RATING: 10,000 PSI MATED (OPEN FACE OPTIONAL)
   TEMPERATURE: -57°C TO +93°C (-70°F TO +200°F)
   VOLTAGE: VARIES ACCORDING TO FACE CONFIGURATION (SEE TABLE)
   MOUNTING TORQUE: 75 in-lbs.

REVISIONS					
ZONE	REV	REF E.C.O. NO.	DESCRIPTION	DATE	APPROVED

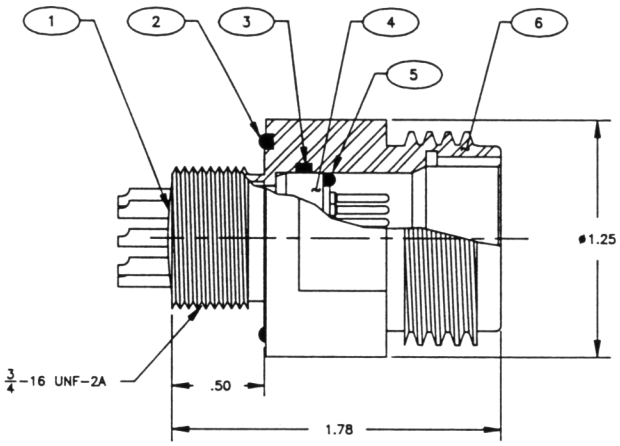

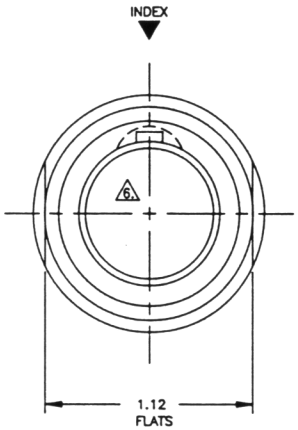

MSXEE-BCR FACE VIEW 6

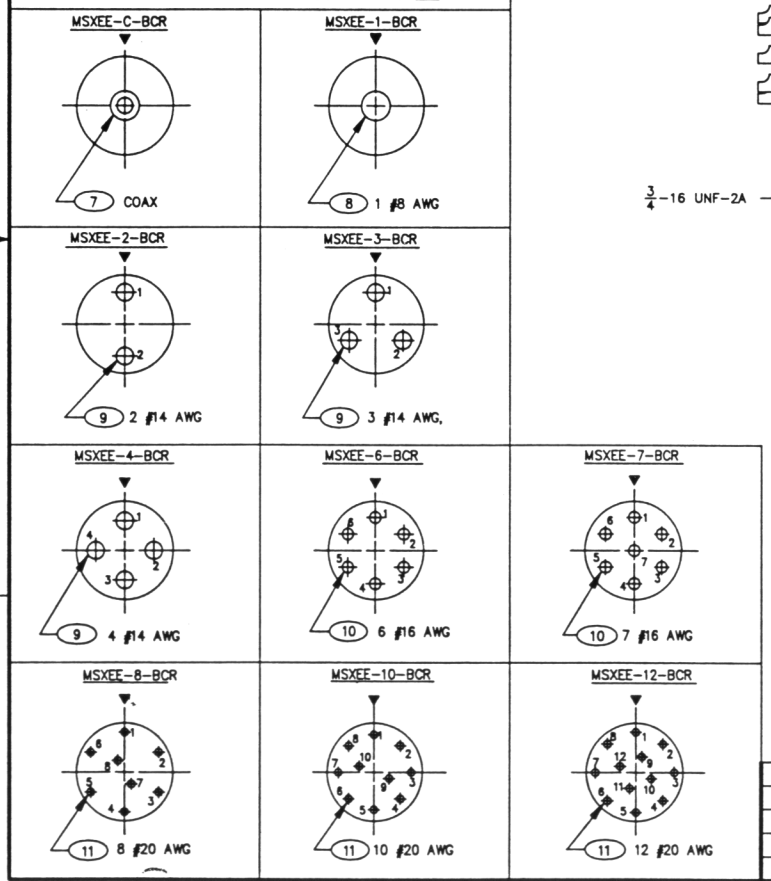

VOLTAGE RATING	
CONNECTORS	VOLTS DC
MSXEE-C	1000
MSXEE-1	1000
MSXEE-2	800
MSXEE-3	700
MSXEE-4	600
MSXEE-6	500
MSXEE-7	500
MSXEE-8	400
MSXEE-10	300
MSXEE-12	250

ITEM	QTY REQD	FSCM NO.	PART OR IDENTIFYING NO.	NOMENCLATURE OR DESCRIPTION	MATERIAL SPECIFICATION
11	AR	15789	3006	#20 AWG CONTACT PIN	2
10	AR	15789	3007	#16 AWG CONTACT PIN	2
9	AR	15789	3008	#14 AWG CONTACT PIN	2
8	AR	15789	3009	#8 AWG CONTACT PIN	2
7	AR	15789	3300	COAX	2
6	1	15789	84-3-306	MSXEE-BCR SHELL	1
5	1	——	5-001	O-RING	4
4	1	15789	84-2-375	MSXEE-CIR	5
3	1	——	2-017	O-RING	4
2	1	——	2-022	O-RING	4
1	AR	——	——	POTTING	3

PARTS LIST — SEACON®

ASSY HARDWARE	PART NO.

APPLICATION

UNLESS OTHERWISE SPECIFIED DIMENSIONS ARE IN INCHES
TOLERANCES ARE:
FRACTIONS ± 1/16 DECIMALS .XX± .015 .XXX± .005 ANGLES ±1/2°
BREAK ALL EDGES & CORNERS .015 RAD. ALL DIA. TO BE CONCENTRIC WITHIN .004 TIR
FINISH 125

DO NOT SCALE DRAWING

CONTRACT NO.

APPROVALS	DATE
DRAWN K. RIDGELS	92-5-19
CHECKED K. NORTHUP	92-5-20
ISSUED	

SEACON BRANTNER & ASSOCIATES, INC.
MAIN PLANT 1240 VERNON WAY EL CAJON, CALIF. 92020

MSXEE-BCR

SIZE	FSCM NO.	DWG NO.	REV
C	15789	84-3-300	

SCALE 2/1 SHEET OF

XSJ SERIES
SUPERCEDED BY XSJJ

DESCRIPTION:
The XSJ is our smallest connector set in this series. Manufactured of special glass reinforced epoxy they are rugged, reliable and compatible with any type of metal bulkhead material. Easily bonded to utilizing neoprene or polyurethane they are designed for use in low pressure and up to 10,000 PSI applications.

OPTIONS
- Pigtails (Bulkhead connector low pressure side) - Add P after the part number.
- Dummy Connectors - DSP for Dummy Sealing Plug (Seals Receptacle). DSR for Dummy Sealing Receptacle (seals plug)
- Nuts and Washer Set for bulkhead connector insulation.
- Open face pressure resistance on either plug or receptacle.

SPECIFICATIONS:
Pressure Range - Atmospheric to 10,000 PSI mated.
Contacts - Brass, gold plated (Mil-G-45204)
Temperature Range - 70° +200° F
O-Rings - Buna N 70 durometer
Voltage - See rating below each contact configuration.

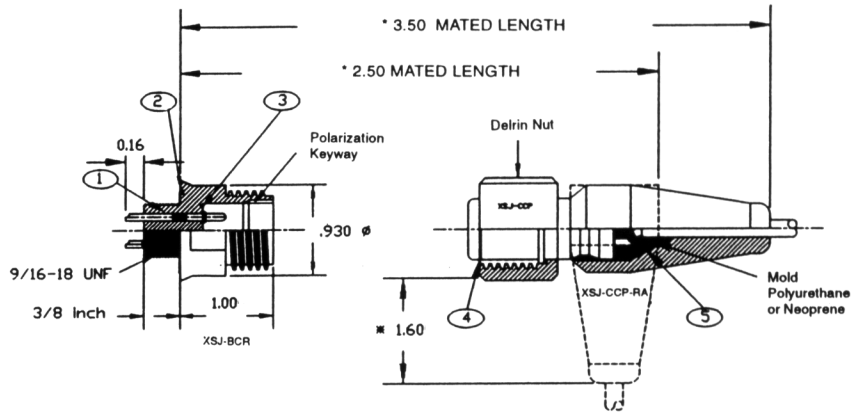

BCR MOUNTING TORQUE 20 INCH LBS

NOTES:
1 - Electrical Contact
2 - O-Ring 5-254
3 - O-Ring 5-058
4 - O-Ring 2-013
5 - Rigid Epoxy Potting (Neoprene Mold Only)

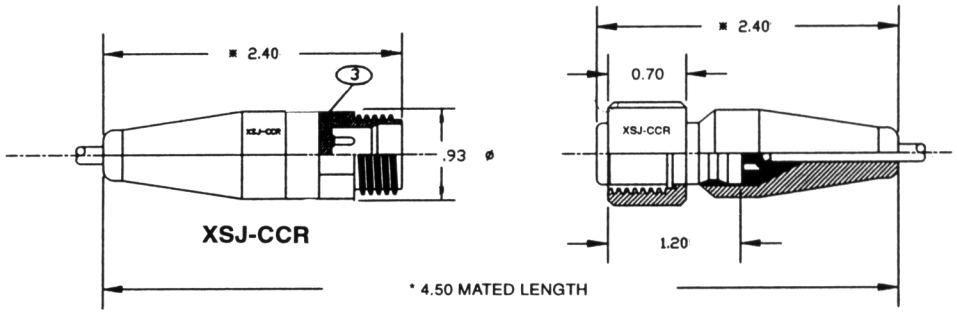

SLIP ON BOOTS
AVAILABLE FOR CCP AND CCR
(SPECIFY EXACT CABLE DIAMETER)

NOTE: Mated lengths shown vary depending upon cable diameters and type of mold.

MSXJ-BCR
(Stainless Steel Body)

NOTES
1 MATERIAL: 316 SST PER QQ-S-763 PASSIVATED OR ELECTROPOLISHED
2 MATERIAL: WHITE EPOXY PER B/A 6373.
3 MATERIAL: COPPER ALLOY AND GOLD PLATED PER MIL-G-45204.
4 MATERIAL: BUNA-N, 70 DURO PER MIL-P-25732.
5 MATERIAL: GLASS REINFORCED EPOXY B/A XS-2748.
6 SEE MSXJ-BCR FACE VIEW FOR CONTACT CONFIGURATIONS.
7 SPECIFICATION:
PRESSURE: 10,000 PSI MATED (OPEN FACE OPTIONAL)
TEMPERATURE: -57° C TO +93° C (-70° F TO 200° F)
VOLTAGE: VARIES ACCORDING TO FACE CONFIGURATION (SEE TABLE)
8 MATING CONNECTOR: XSJ-CCP.
9 SOLDER CUP LENGTH FOR MSXJ-C-BCR IS .753)
ALL OTHER CONFIGURATIONS HAVE THE SAME SOLDER

CUP LENGTH (.35)

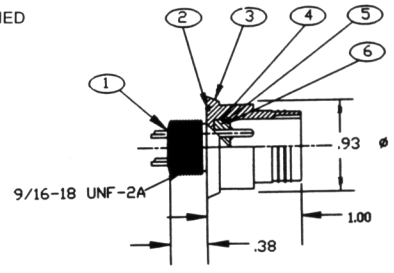

45 inch lbs. mounting torque

Voltage Rating	
Connectors	**Volts DC**
MSXJ-C	1000
MSXJ-2	600
MSXJ-3	600
MSXJ-4	300
MSXJ-5	300
MSXJ-7	300
MSXJ-9	300

AVAILABLE CONTACT CONFIGURATIONS
FACE VIEW BCR SHOWN

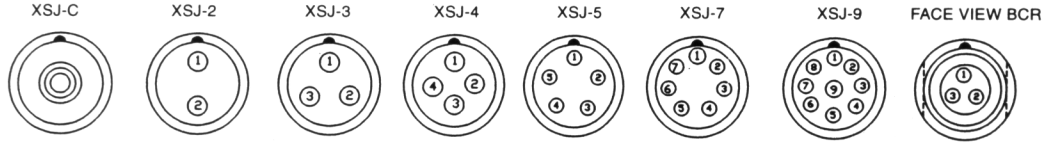

1# 22 AWG 20 Ω COAX COAX NOT GOOD FOR OPEN FACE PRESSURE	1# 14 AWG 1# 16 AWG	1# 14 AWG 2# 16 AWG	1 # 14 AWG 3# 16 AWG	2# 16 AWG 3# 20 AWG	1 # 16 AWG 6# 20 AWG	1# 14 AWG 8# 20 AWG	
1000 VDC	600 VDC	600 VDC	300 VDC	300 VDC	300 VDC	300 VDC	

CONNECTOR BODIES DO NOT COME MOLDED TO CABLES UNLESS SO SPECIFIED WHEN ORDERING.

1 - Potting
2 - O-Ring - 5-254
3 - MSXJ Shell
4 - O-Ring - 2-015
5 - MSXJ-CIR
6 - O-Ring - 5-058

Part Number Explanation
XSJ-BCR Bulkhead Connector Receptacle
XSJ-CCP Cable Connector Plug
XSJ-CCR Cable Connector Receptacle
Insert the desired number of contacts between each series of 3 letters
XS Indicates the material non mettallic, Glass reinforced epoxy series
J indicates connector size.

NOTE: Torque values referenced in this literature assume installation into dry metal threads. Please contact the factory for recommendations.

REVISIONS					
ZONE	REV	REF E.C.O. NO.	DESCRIPTION	DATE	APPROVED

XSJJ-CCP & ASSY

SUPERCEDES THE XSJ-CCP, BUT IS NOT INTERMATEABLE

NOTES:

1. MATERIAL: GLASS REINFORCED EPOXY B/A XS-2748.
2. MATERIAL: COPPER ALLOY & GOLD PLATED PER MIL-G-45204.
3. MATERIAL: BUNA-N, 70 DURO PER MIL-P-25732.
4. MATERIAL: BLACK DELRIN.
5. SEE XSJJ-CCP FACE VIEW FOR CONTACT CONFIGURATIONS.
6. MATING CONNECTOR: XSJJ-BCR
7. SPECIFICATIONS:
   - PRESSURE: 10,000 PSI MATED (OPEN FACE OPTIONAL).
   - TEMPERATURE: -57°C TO +93°C (-70°F TO +200°F)
   - VOLTAGE: VARIES ACCORDING TO FACE CONFIGURATION (SEE TABLE)
8. SOLDER CUP LENGTH VARIES ACCORDING TO FACE CONFIGURATIONS. (SEE CHART)

CONNECTORS	ITEM	LENGTH	VOLTS DC
XSJJ-C	4	.325	1000
XSJJ-2	5 & 6	.375	600
XSJJ-3	5 & 6	.375	600
XSJJ-4	5 & 6	.375	300
XSJJ-5	6 & 7	.375	300
XSJJ-7	6 & 7	.375	300
XSJJ-9	5 & 7	.375	300

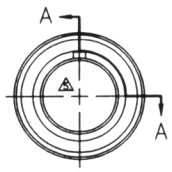

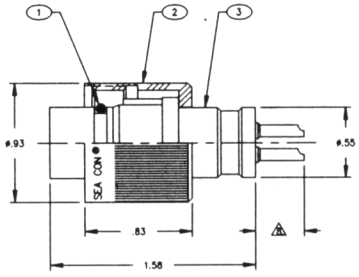

SECTION A–A

XSJJ-CCP FACE VIEW

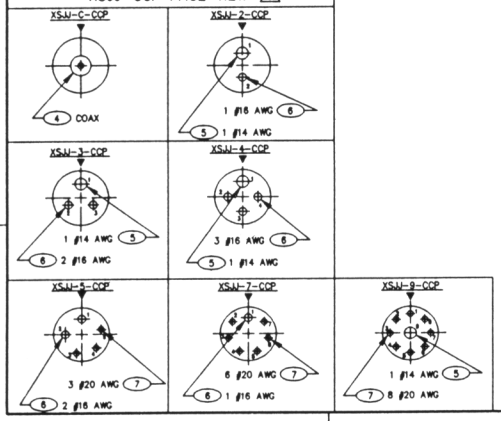

NOTE: "Contact configurations shown are those planned. Contact factory for availability".

ITEM	QTY REQD	PSCM NO.	PART OR IDENTIFYING NO.	NOMENCLATURE OR DESCRIPTION	MATERIAL INFORMATION
7	AR	15789	2053	ø20 AWG CONTACT SOCKET	
6	AR	15789	2054	ø16 AWG CONTACT SOCKET	
5	AR	15789	2055	ø14 AWG CONTACT SOCKET	
4	AR	15789	2301	ø22 AWG/20 COAX	
3	1	15789	6947-220	XSJJ-CCP BODY	
2	1	15789	6947-250	XSJJ-CCP ENGAGING NUT	
1	1	02697	2-013	O-RING	

PARTS LIST SEACON®

UNLESS OTHERWISE SPECIFIED DIMENSIONS ARE IN INCHES TOLERANCES ARE: FRACTIONS ± 1/32 DECIMALS .XX ± .015 .XXX ± .005 ANGLES ±1/2° BREAK ALL EDGES & CORNERS .015 RAD. ALL DIA. TO BE CONCENTRIC WITHIN .004 TIR FINISH 125	CONTRACT NO.	SEACON	BRANTNER & ASSOCIATES, INC. MAIN PLANT 1240 VERNON WAY EL CAJON, CALIF. 92020
	APPROVALS / DRAWN M. JUAREZ 911007 / CHECKED D. SEILHAN 930106 / ISSUED	XSJJ-CCP & ASSY	
ASSY HARDWARE PART NO. APPLICATION	DO NOT SCALE DRAWING	SIZE C / PSCM NO. 15789 / DWG NO. 6947-103 / REV	
		SCALE 2/1	SHEET OF

XSJJ-BCR

SUPERCEDES THE XSJ-BCR, BUT IS NOT INTERMATEABLE

NOTES:

1. MATERIAL: GLASS REINFORCED EPOXY B/A XS-2748.
2. MATERIAL: COPPER ALLOY & GOLD PLATED PER MIL-G-45204.
3. SEE XSJJ-BCR FACE VIEW FOR CONTACT CONFIGURATIONS.
4. MATERIAL: BUNA-N, 70 DURO PER MIL-P-25732.
5. MATING CONNECTOR: XSJJ-CCP
6. SPECIFICATIONS:
   - PRESSURE: 10,000 PSI MATED (OPEN FACE OPTIONAL).
   - TEMPERATURE: -57°C TO +93°C (-70°F TO +200°F)
   - VOLTAGE: VARIES ACCORDING TO FACE CONFIGURATION (SEE TABLE)
   - MOUNTING TORQUE: 20 in lbs
7. SOLDER CUP LENGTH VARIES ACCORDING TO FACE CONFIGURATIONS. (SEE CHART)

CONNECTORS	ITEM	LENGTH	VOLTS DC
XSJJ-C	4	.683	1000
XSJJ-2	5 & 6	.265/.265	600
XSJJ-3	5 & 6	.265/.265	600
XSJJ-4	5 & 6	.265/.265	300
XSJJ-5	6 & 7	.265/.345	300
XSJJ-7	6 & 7	.265/.345	300
XSJJ-9	6 & 7	.265/.345	300

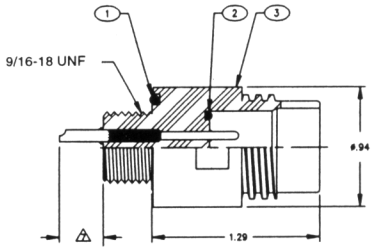

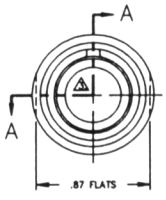

SECTION A–A

XSJJ-BCR FACE VIEW

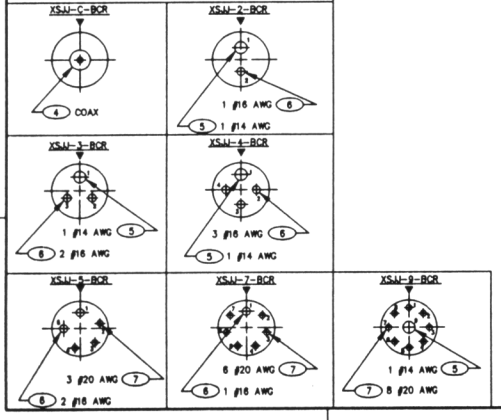

NOTE: "Contact configurations shown are those planned. Contact factory for availability".

ITEM	QTY REQD	PSCM NO.	PART OR IDENTIFYING NO.	NOMENCLATURE OR DESCRIPTION	MATERIAL INFORMATION
7	AR	15789	3006	ø20 AWG CONTACT PIN	
6	AR	15789	3032	ø16 AWG CONTACT PIN	
5	AR	15789	3033	ø14 AWG CONTACT PIN	
4	AR	15789	3315	ø22 AWG/20 COAX	
3	1	15789	6947-200	XSJJ-BCR BODY	
2	1	02697	5-058	O-RING	
1	1	02697	5-254	O-RING	

PARTS LIST SEACON®

NOTE: Torque values referenced in this literature assume installation into dry metal threads. Please contact the factory for recommendations.

SEACON® AC

NOTE: Torque values referenced in this literature assume installation into dry metal threads. Please contact the factory for recommendations.

XSJJ-CCR & ASSY

SUPERCEDES THE XSJ, BUT IS NOT INTERMATEABLE

NOTES:

1. MATERIAL: GLASS REINFORCED EPOXY B/A XS-2748.
2. MATERIAL: COPPER ALLOY & GOLD PLATED PER MIL-G-45204.
3. SEE XSJJ-BCR FACE VIEW FOR CONTACT CONFIGURATIONS.
4. MATERIAL: BUNA-N, 70 DURO PER MIL-P-25732.
5. MATING CONNECTOR: XSJJ-CCP
6. SPECIFICATIONS:
   - PRESSURE: 10,000 PSI MATED (OPEN FACE OPTIONAL).
   - TEMPERATURE: -57°C TO +93°C (-70°F TO +200°F)
   - VOLTAGE: VARIES ACCORDING TO FACE CONFIGURATION (SEE TABLE)
   - MOUNTING TORQUE: 20 in lbs

4 SOLDER CUP LENGTH VARIES ACCORDING TO FACE CONFIGURATIONS. (SEE CHART)

CONNECTORS	ITEM	LENGTH	VOLTS DC
XSJJ-C	3	.663	1000
XSJJ-2	4 & 5	.265/.265	600
XSJJ-3	4 & 5	.265/.265	600
XSJJ-4	4 & 5	.265/.265	300
XSJJ-5	5 & 6	.265/.345	300
XSJJ-7	5 & 6	.265/.345	300
XSJJ-9	4 & 6	.265/.345	300

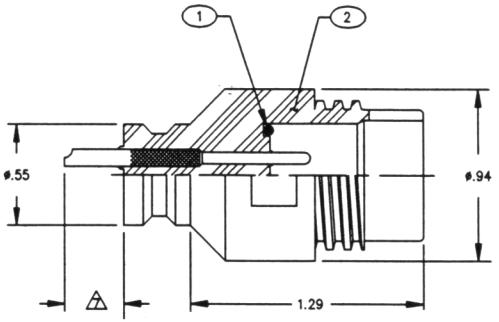

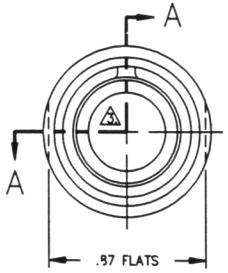

SECTION A-A

XSJJ-CCR FACE VIEW 3

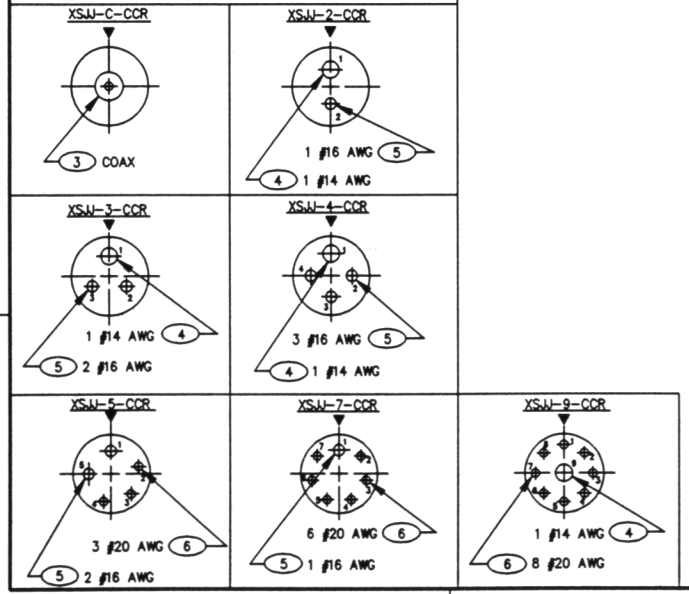

NOTE: "Contact configurations shown are those planned. Contact factory for availability".

ITEM	QTY REQD	FSCM NO.	PART OR IDENTIFYING NO.	NOMENCLATURE OR DESCRIPTION	MATERIAL SPECIFICATION
6	AR	15789	3006	#20 AWG CONTACT PIN	2
5	AR	15789	3032	#16 AWG CONTACT PIN	2
4	AR	15789	3033	#14 AWG CONTACT PIN	2
3	AR	15789	3315	#22 AWG/20 COAX	2
2	1	15789	6947-207	XSJJ-CCR BODY	1
1	1	02697	5-058	O-RING	4

PARTS LIST SEACON®

ASSY HARDWARE	PART NO.
APPLICATION	

UNLESS OTHERWISE SPECIFIED DIMENSIONS ARE IN INCHES
TOLERANCES ARE:
FRACTIONS ± 1/16 DECIMALS .XX± .015 .XXX± .005 ANGLES ±1/2°
BREAK ALL EDGES & CORNERS .015 RAD. ALL DIA. TO BE CONCENTRIC WITHIN .004 TIR
FINISH 125

CONTRACT NO.

APPROVALS	DATE
DRAWN K. RIDGELS	950308
CHECKED LAI PHAM	950309
ISSUED	

DO NOT SCALE DRAWING

SEACON BRANTNER & ASSOCIATES, INC.
MAIN PLANT 1240 VERNON WAY EL CAJON, CALIF. 92020

XSJJ-CCR & ASSY

SIZE	FSCM NO.	DWG NO.	REV
C	15789	6947-104	

SCALE 2/1 SHEET 1 OF 1

REVISIONS					
ZONE	REV	REF E.C.O. NO.	DESCRIPTION	DATE	APPROVED

NOTE: Torque values referenced in this literature assume installation into dry metal threads. Please contact the factory for recommendations.

REVISIONS					
ZONE	REV	REF E.C.O. NO.	DESCRIPTION	DATE	APPROVED
	A	9551	REV NOTE 4	960812	

MSXJJ-BCR & ASSY

SUPERCEDES THE MSXJ, BUT IS NOT INTERMATABLE

NOTES:

1. MATERIAL: 316 SST PER QQ-S-763
2. MATERIAL: GLASS REINFORCED EPOXY B/A XS-2748.
3. MATERIAL: COPPER ALLOY & GOLD PLATED PER MIL-G-45204.
4. SEE MSXJJ-BCR FACE VIEWS FOR CONTACT CONFIGURATIONS.
5. MATERIAL: BUNA-N, 70 DURO PER MIL-P-25732.
6. MATING CONNECTOR: XSJJ-CCP
7. SPECIFICATIONS:
   - PRESSURE: 10,000 PSI MATED (OPEN FACE OPTIONAL).
   - TEMPERATURE: -57°C TO +93°C (-70°F TO +200°F)
   - VOLTAGE: VARIES ACCORDING TO FACE CONFIGURATION (SEE TABLE)
   - MOUNTING TORQUE: 20 in lbs
8. MATERIAL: WHITE EPOXY PER B/A 6373

CONNECTORS	ITEM	CONTACT F	CONTACT B	VOLTS DC
MSXJJ-C-BCR	7	.66		1000
MSXJJ-2-BCR	8 & 9	.265	.26	600
MSXJJ-3-BCR	8 & 9	.265	.26	600
MSXJJ-4-BCR	8 & 9	.350	.35	300
MSXJJ-5-BCR	9 & 10	.265	.35/.43	300
MSXJJ-7-BCR	9 & 10	.265	.35/.43	300
MSXJJ-9-BCR	8 & 10	.265	.35/.43	300

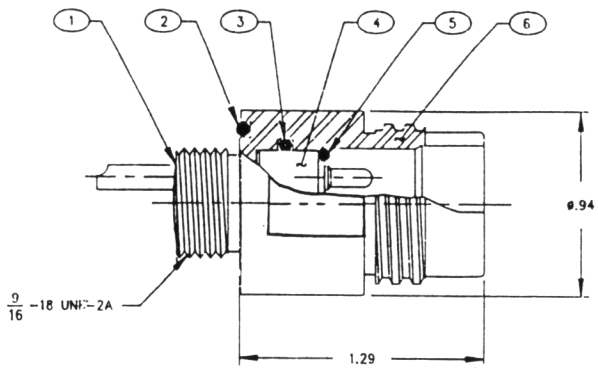

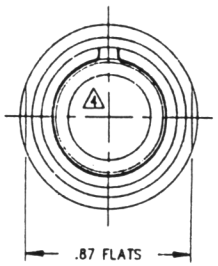

MSXJJ-BCR FACE VIEW 4

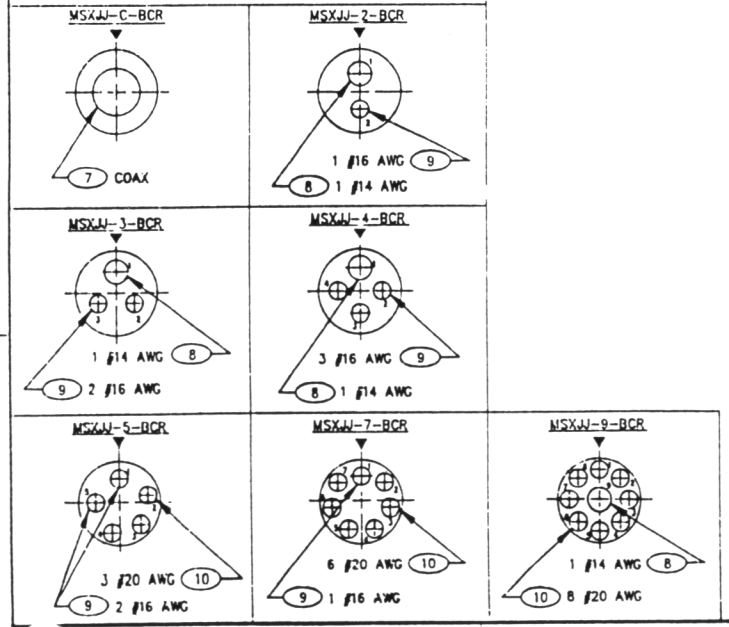

NOTE: "Contact configurations shown are those planned. Contact factory for availability".

COPYRIGHT© 1996 BRANTNER & ASSOCIATES, Inc.

ITEM	QTY REQD	FSCM NO.	PART OR IDENTIFYING NO.	NOMENCLATURE OR DESCRIPTION	MATERIAL SPECIFICATION
10	AR	15789	3550	#20 AWG CONTACT PIN	3
9	AR	15789	3007	#16 AWG CONTACT PIN	3
8	AR	15789	3008	#14 AWG CONTACT PIN	3
7	AR	15789	3300	#22 AWG/20 COAX	3
6	1	15789	7276-201	MSXJJ-BCR SHELL	1
5	1	02697	5-058	O-RING	5
4	1	15789	84-3-275	MSXJ-CIR INSERT	2
3	1	02697	2-015	O-RING	5
2	1	02697	5-254	O-RING	5
1	AR	15789	———	POTTING	8

PARTS LIST SEACON®

JSSY NUMBER	PART NO.
APPLICATION	

THIS DRAWING CONTAINS PROPRIETARY INFORMATION OF BRANTNER & ASSOCIATES, Inc. d.b.a. SEACON. USE, DUPLICATION OR DISCLOSURE, IN WHOLE OR IN PART, IS STRICTLY PROHIBITED WITHOUT THE EXPRESS WRITTEN PERMISSION OF AN AUTHORIZED REPRESENTATIVE OF SEACON.

UNLESS OTHERWISE SPECIFIED DIMENSIONS ARE IN INCHES
TOLERANCES ARE:
FRACTIONS ± 1/16 DECIMALS .XX ±.03 .XXX ±.005 ANGLES ±1/2°
BREAK ALL EDGES & CORNERS .005 MAX. ALL DIA. TO BE CONCENTRIC WITHIN .004 TIR
FINISH 125

DO NOT SCALE DRAWING

CONTRACT NO.

APPROVALS	DATE
DRAWN JEFF N	960129
CHECKED LAI PHAM	960129
ISSUED	

SEACON BRANTNER & ASSOCIATES, INC.
MAIN PLANT 1240 VERNON WAY EL CAJON, CALIF. 92020

MSXJJ-BCR & ASSY

SIZE	FSCM NO.	DWG NO.	REV
C	15789	7276-102	A

SCALE 2/1 SHEET 1 OF 1

45-6 (REV 032098)

SEACON AC

XSL SERIES

DESCRIPTION:

The XSL is our oldest connector set in this series, originating over 25 years ago. Manufactured of special glass reinforced epoxy, it has proven itself in many various types of harsh environments. These connectors are easily bonded to utilizing neoprene or polyurethane. Field installable units are available on page 45-9. It is also available in a Pressure Balanced Oil Filled (PBOF) Series, see page 70-5.

SPECIFICATIONS:

Pressure Range - Atmospheric to 20,000 PSI mated.
Contacts - Brass, gold plated (Mil-G-45204)
Temperature Range - 70° +200° F
O-Rings - Buna N 70 durometer
Voltage - See rating below each contact configuration.

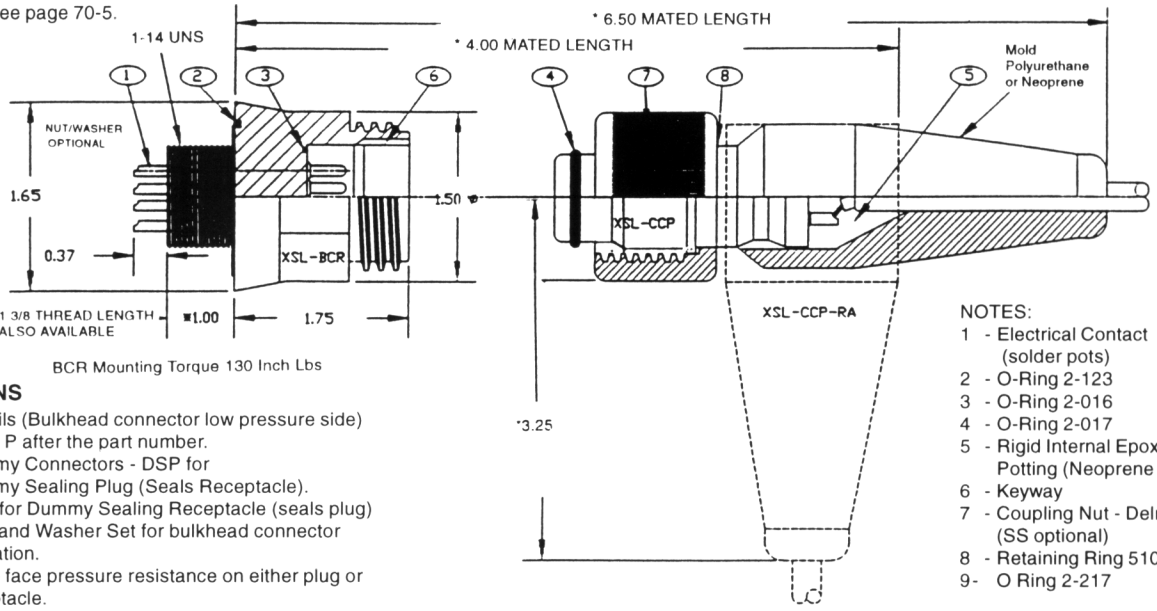

BCR Mounting Torque 130 Inch Lbs

OPTIONS

- Pigtails (Bulkhead connector low pressure side) - Add P after the part number.
- Dummy Connectors - DSP for Dummy Sealing Plug (Seals Receptacle). DSR for Dummy Sealing Receptacle (seals plug)
- Nuts and Washer Set for bulkhead connector insulation.
- Open face pressure resistance on either plug or receptacle.

NOTES:
1 - Electrical Contact (solder pots)
2 - O-Ring 2-123
3 - O-Ring 2-016
4 - O-Ring 2-017
5 - Rigid Internal Epoxy Potting (Neoprene mold only)
6 - Keyway
7 - Coupling Nut - Delrin (SS optional)
8 - Retaining Ring 5100-87
9- O Ring 2-217

NOTE: Connectors do not come molded onto cable unless specified when ordering

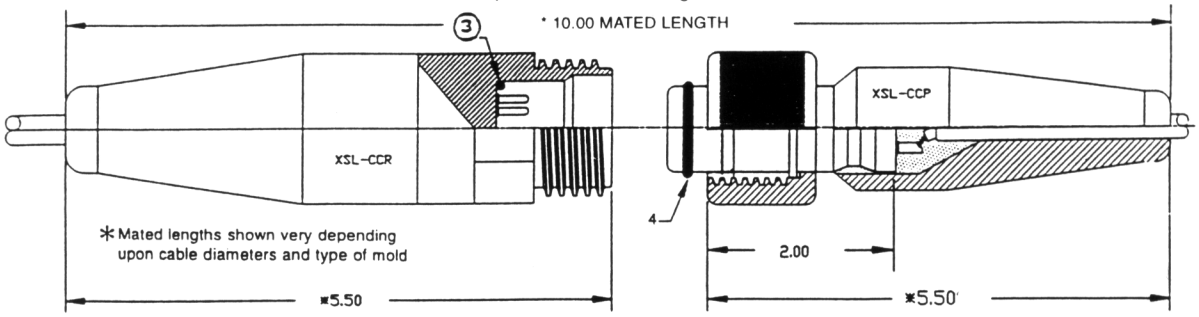

AVAILABLE CONTACT CONFIGURATIONS - Face View BCR Shown

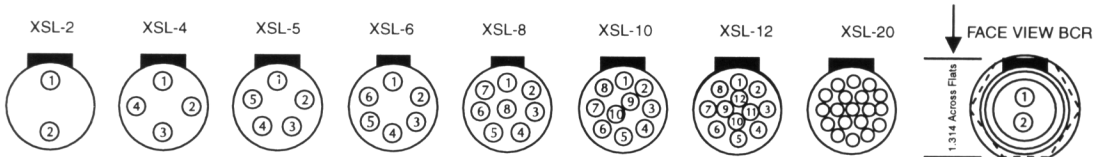

XSL-2	XSL-4	XSL-5	XSL-6	XSL-8	XSL-10	XSL-12	XSL-20
1# 18 AWG 1# 10 AWG 1200 VDC	4# 10 AWG 900 VDC	1# 14 AWG 4# 16 AWG 800 VDC	6# 16 AWG 800 VDC	8# 16 AWG 600 VDC	10# 16 AWG 400 VDC	12# 16 AWG 300 VDC	20# 16 AWG 300 VDC

Notes:
XSL-6 # 16 & XSL-8 configurations have narrow key - all others have wide key.
XSL-20 available only with 1-3/8 thread lendgth.
XSL-20-BCR utilizes O-Ring 5-254.

"Contact configurations shown are for XSL BCR, CCR and CCP. Contact factory for availability for XSL BCP and MSXL BCR.

XSL-BCP

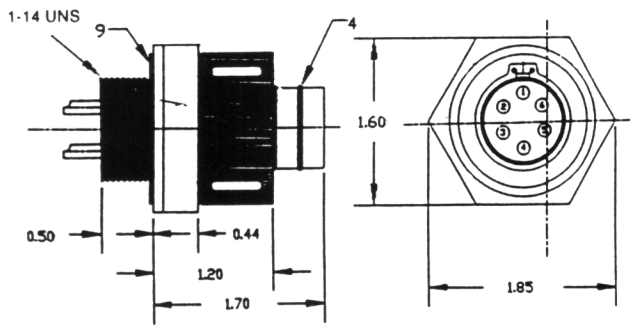

MSXL-BCR

(Stainless Steel Body)

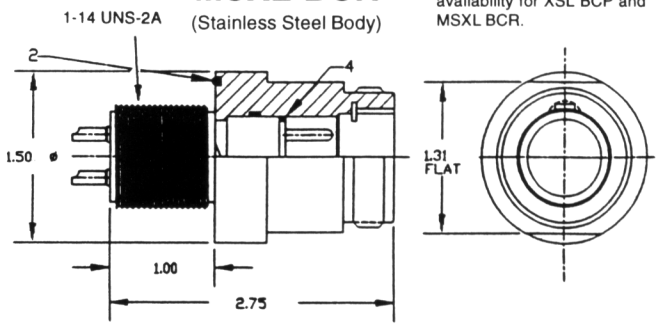

Torque Rating - .130 Inch lbs.

NOTE: Torque values referenced in this literature assume installation into dry metal threads. Please contact the factory for recommendations.

XSM SERIES

Material: Glass Reinforced Epoxy
Pressure Rating, Mated: Atmosheric to 10,000 psi
Contacts: Brass, Hard Gold Plated (Mil-G-45204)
Temperature Range: -70° + 200°F
O-Rings: Buna N 70 Durometer
Voltage: See rating below each contact configuration.

OPTIONS:
Pigtails: (Bulkhead connector low pressure side) 18" length.
Add P after the part number.
Dummy Connectors: DSP for Dummy Sealing Plug (Seals Receptacle). DSR for Dummy Sealing Receptacle (Seals Plug).
Nut and Washer Set for Bulkhead Connector Installation.
Open Face Pressure Resistance on either plug or receptacle.
Field Installable Units

*Mated lengths shown vary depending upon cable diameters and type of mold.

Description: The XSM is one of the largest connector sets in this series. This connector, made of special glass reinforced epoxy, has been produced by us for many years having won acceptances in various rugged environments such as deep ocean, oil field, ship sub-surface electronics and many others. These connectors are easily bonded to using neoprene or polyurethane. Field installable units available.

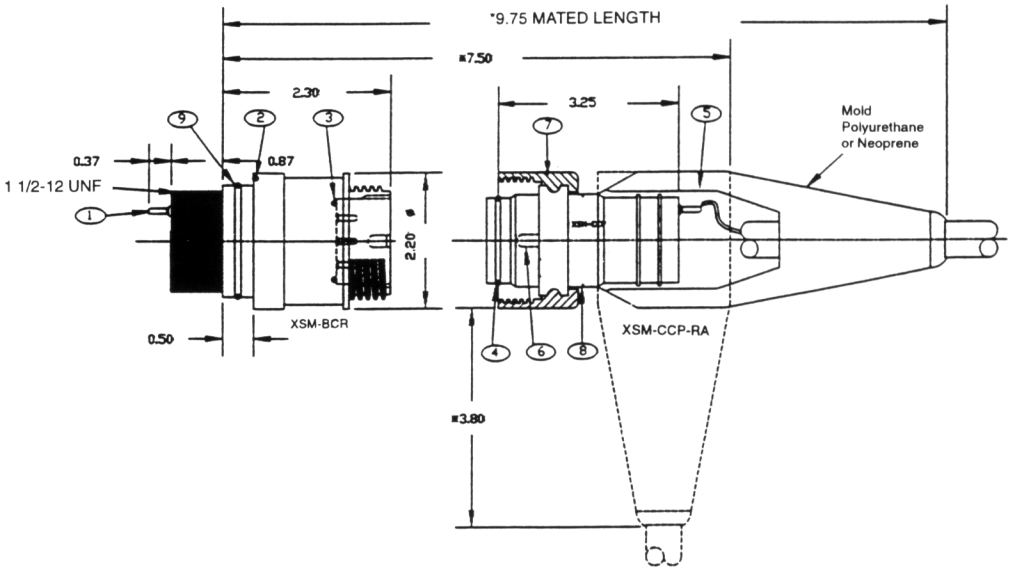

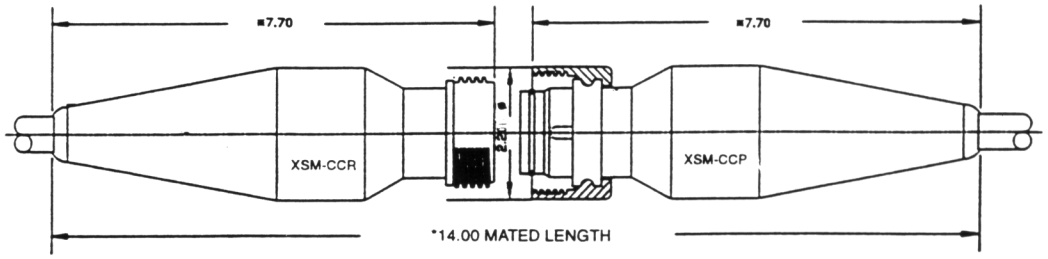

1 Electrical Contacts
2 O-Ring 2-132
3 O-Ring 2-122
4 O-Ring 2-026
5 Rigid Internal Reinforcement Potting (optional)
6 Keyway
7 Coupling Nut (SST)
8 Retaining Ring
9 O-Ring 2-126

Available Contact Configurations (Face View BCR Shown)

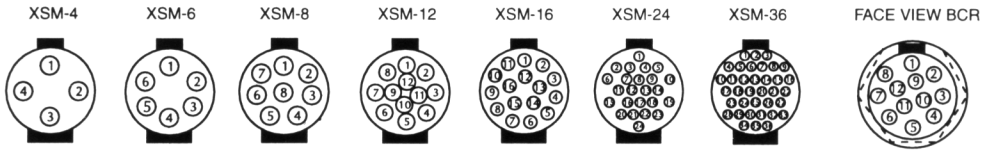

4# 6 AWG	6# 10 AWG	8# 14 AWG	12# 14 AWG	16# 14 AWG	24# 16 AWG	36# 16 AWG
1800 VDC	900 VDC	700 VDC	600 VDC	700 VDC	600 VDC	300 VDC

NOTE: Torque values referenced in this literature assume installation into dry metal threads. Please contact the factory for recommendations.

MSXM-BCR SERIES

(STAINLESS STEEL BODY)

Suggested Mounting

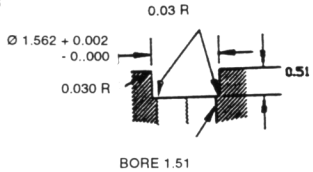

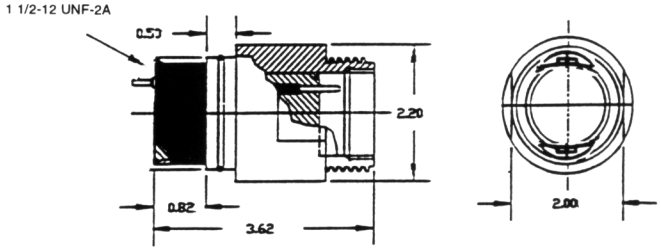

FIELD INSTALLABLE SERIES (XSL. XSM)

This field installable series is available in the XSL and XSM sizes. Available as complete kits if desired including connector bodies, component hardware and pre-packaged, ready-to-use injection material. (Cables available upon request.) Designed for in-the-field assembly - applicable to offshore oilfield and oceanographic uses.

Also Available: **XSL** and **XSM CCR-FIA** . For in-line applications use same backshell and torque nut as CCP.

XSL-BCR (page). XSM-BCR (page).

O-Rings:
*XSL-FIA, C O-Ring 2-114
*XSM-FIA, C and C_1 - both are O-Ring 2-125 (for both size XSM CCP Housings)

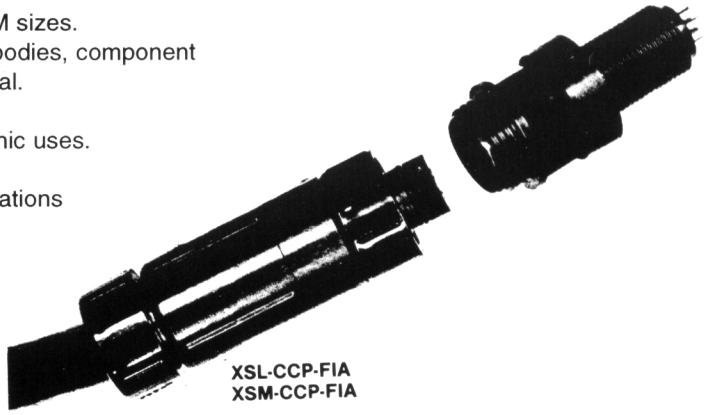

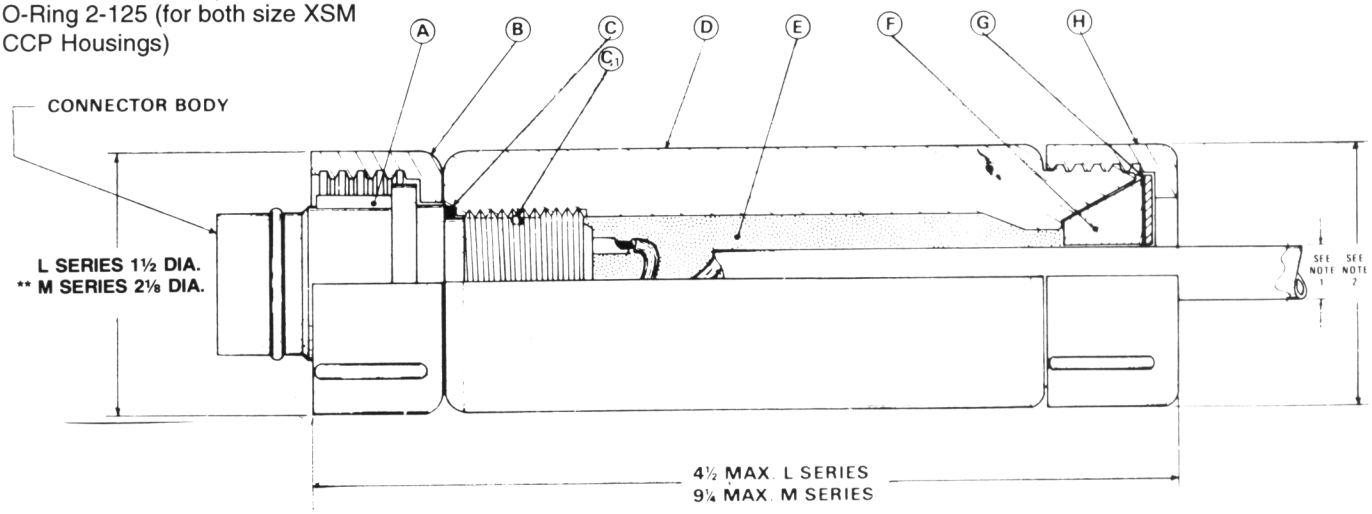

A. Polarization Key, integrally molded
B. Coupling Nut, plastic for L series
SST for M series
C. O-Ring on L series
C_1 O-Ring Seal - M series
D. Housing, non-metallic
E. Sealing Compound PN BA 1/2
Cures in 1/2 hour
F. Elastomeric Squeeze Grommet Seal
G. Flat Washer
H. Torque Nut, plastic for L series
Bronze for M series
L. Refers to the XSL connector series
M. Refers to the XSM connector series.

Notes:
1 L series cable size .50" max.
M series cable size 1.37" max.
2 L Torque Nut Diameter 1-1/2"
M Torque Nut Diameter 1-7/8"
3. Hydrostatic Pressure - 5000 psi
4. Cable (Neoprene or Polyurethane) should be cleaned and prepared prior to assembly to insure adhesion.

XSL series FIA available thru 12 contact configuration. Not available in 20 contact version.
** Housing for XSM-FIA also available in 2 1/4 inch diameter for accommodating cables over 1" diameter. Housing is 2 1/8" diameter for cables less than 1" diameter.

Installation Procedure:
1. Units H, G, F and D are placed on cable; push back along cable out of the way (include I if being used).
2. Terminate electrical conductor(s) to terminal as shown (solder) - clean and prepare cable in area where adhesion required.
3. Slide housing D forward and screw on to connector body - seals upon O-Ring C or C_1 .
4. Inject compound E thru back end of housing until full (requires 30 minutes to cure).
5. Slide forward and install units H, G and F. G and F seals to cable immediately while compound E is curing - connector assembly.

When Ordering, Use Folllowing Part Numbers:
XSL-(number of contacts) CCP-FIA (Specify also exact cable diameter to be used).
XSM-(number of contacts) CCP-FIA (Specify also exact cable diameter to be used).

NOTE: Torque values referenced in this literature assume installation into dry metal threads. Please contact the factory for recommendations.

RUBBER MOLDED BULKHEAD CONNECTOR MATES
VISUAL INDEX

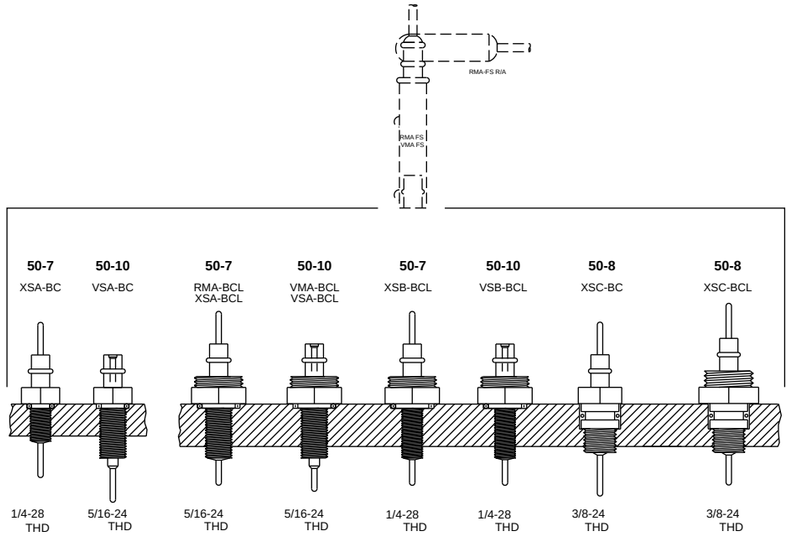

NOTE: Torque values referenced in this literature assume installation into dry metal threads. Please contact the factory for recommendations.

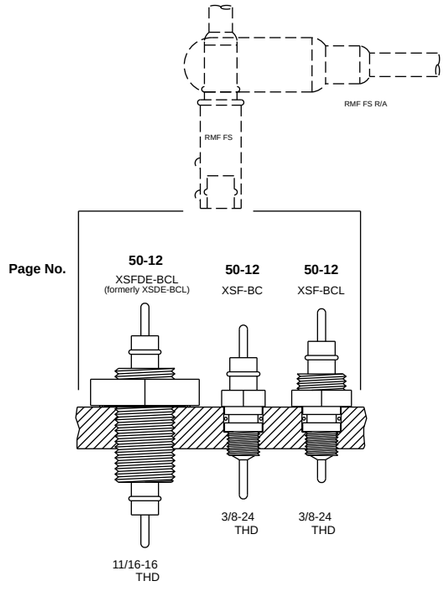

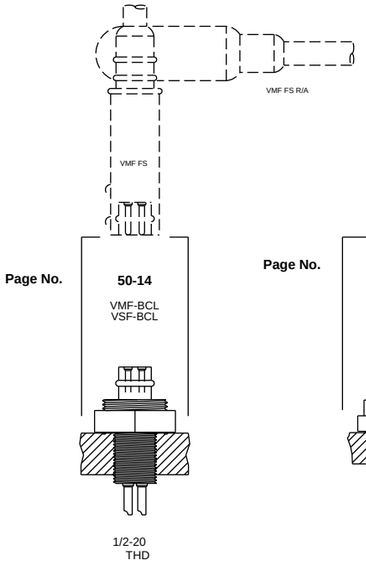

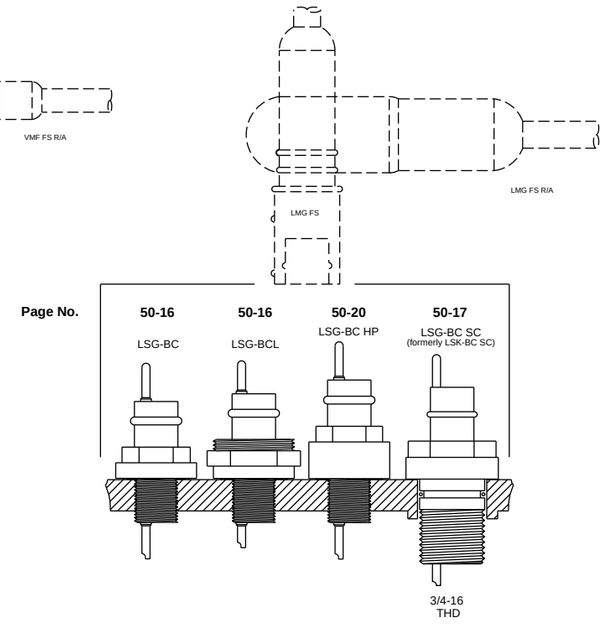

NOTE:
LSG-3-BC: 1/2-20
LSG-4-BC: 9/16-18
LSG-6-BC: 9/16-18

NOTE:
LSG-3-BCL: 1/2-20
LSG-4-BCL: 9/16-18
LSG-6-BCL: 9/16-18

NOTE:
LSG-3-BC HP: 1/2-20
LSG-4-BC HP: 9/16-18
LSG-6-BC HP: 9/16-18

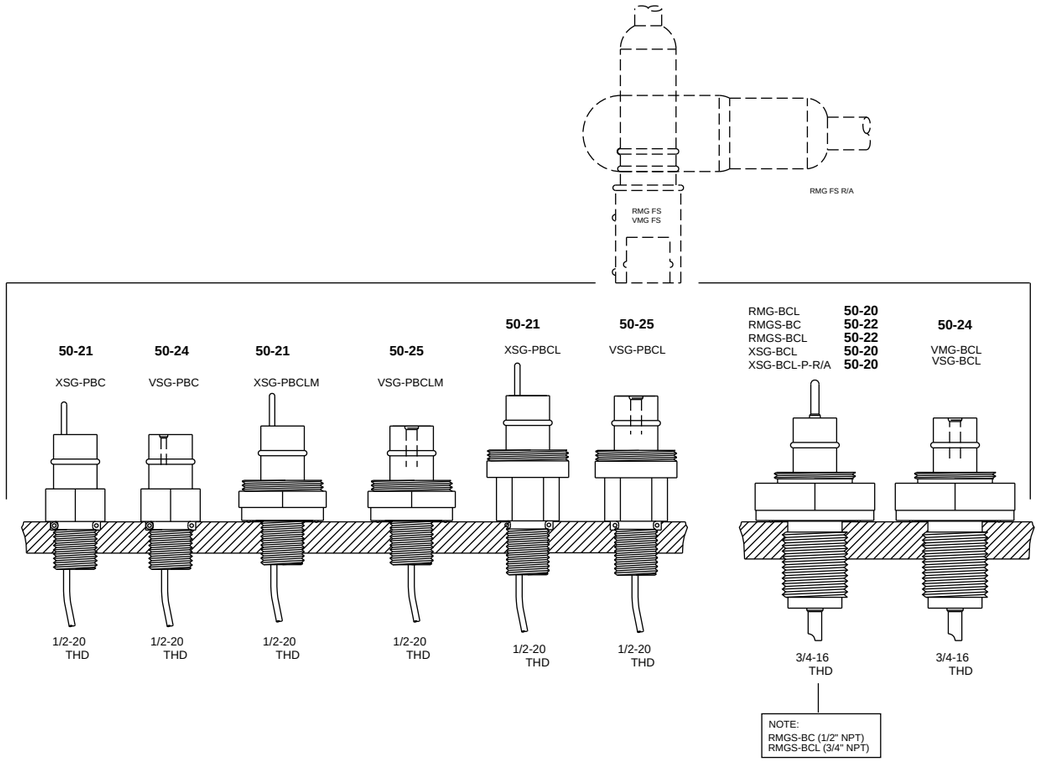

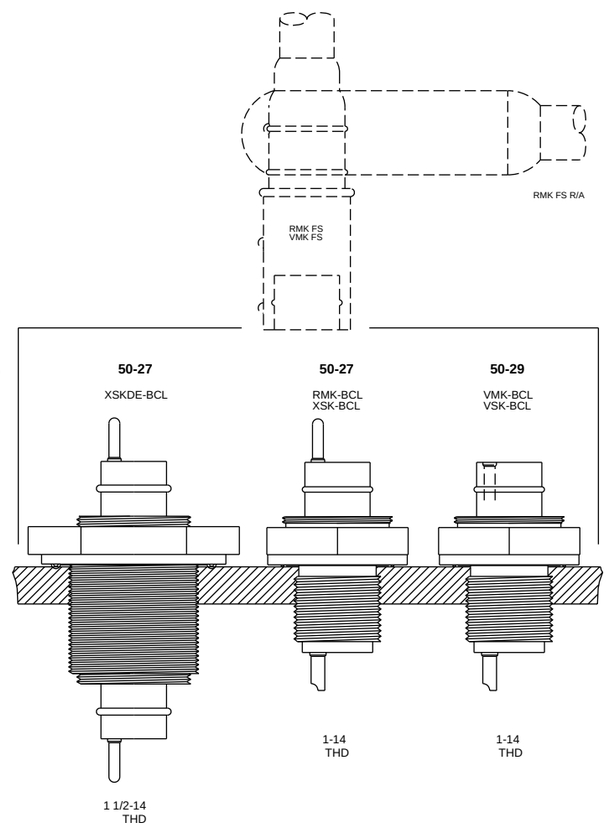

INTRODUCTION

Our standard rubber molded series typically consists of an in-line female neoprene connector mated to a glass reinforced epoxy (XS) bulkhead connector. Various sizes are available ranging from single contact connectors up through 12 contact connectors. Most are available with pins and sockets reversed to help prevent mismating of connectors, which otherwise look identical, but more to allow for socket type contacts in a connector where there is a possibility of a "power-on" situation. Many of the bulkhead type connectors are available in 316 Stainless Steel, and can also be manufactured of any of the exotic metals. Male in-line connectors round out the series allowing for in-line mated sets not requiring bulkhead penetration. In addition, the WOC (without cable) type connectors allow for field installation in the event that a connector is damaged while at sea and needs replacing, or long cable lengths make cable transportation cost prohibitive.

The time proven rubber molded series is one of our most inexpensive lines and has been used on all types of underwater instrumentation including: underwater lighting, communications, ROV's, thermistor arrays, hydrophone arrays, and all types of sonar systems. The contacts are gold plated per MIL-G-45204 and the series is rated up to 20,000 psi in a mated condition.

PART NUMBERING SYSTEM

CONNECTORS

RM G - 6 - FS - R/A

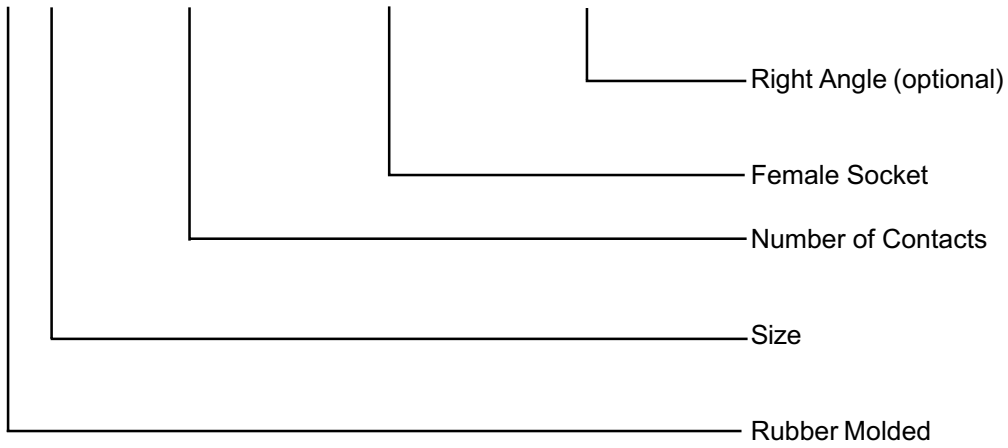

In-Line Connectors		Bulkhead Connectors			
LM	Rubber Molded-Special Version	LS	Glass Reinforced Epoxy- *Special Version*	R/A	Right Angle
RM	Rubber Molded	RM	Metal Shell	SC	Solder Cup
VM	Reversed Rubber Molded	VM	Reversed Metal Shell	TH	Thermistor Housing
FS	Female Socket	VS	Reversed Glass Reinforced Epoxy		
FSD	Female Socket Dummy	XS	Glass Reinforced Epoxy		
MP	Male Plug	BC	Bulkhead Connector		
MPD	Male Plug Dummy	BCL	BC w/Locking Thread		
FI	Field Installable	C	COAX		
HP	High Pressure	DE	Double Ended		
LP	Low Pressure	HP	High Pressure		
SL	Slip-on Series	IDC	Inboard Disconnect		
WOC	Without Cable	P	Pigtails		

NOTE: Torque values referenced in this literature assume installation into dry metal threads. Please contact the factory for recommendations.

GENERAL INFORMATION
RUBBER MOLDED AND ASSOCIATED SERIES

APPLICATIONS:

Standard, Reversed Rubber Molded Series

- Applications requiring light to medium ruggedness
- Hazardous environments
- Field installable applications

Glass Reinforced Epoxy Series

- Applications requiring medium ruggedness
- Hazardous environments
- Power transmission
- Signal telemetry

Metal Shell Series

- Applications requiring heavy ruggedness
- Hazardous, rugged environments
- Power transmission
- Signal telemetry

CABLE:

Rubber Molded Series

Connector's productivity may be limited by amperage and voltage rating of cable to which it is molded to. With the exception of field installable connectors, the in-line series are provided on a standard 18" length of 18 AWG SO cable unless otherwise specified.

Glass Reinforced Epoxy Series & Metal Shell Series

Connector's productivity may be limited by amperage and voltage rating of cable to which it is molded to. Customer must specify if cable is to be molded.

NOTE: Torque values referenced in this literature assume installation into dry metal threads. Please contact the factory for recommendations.

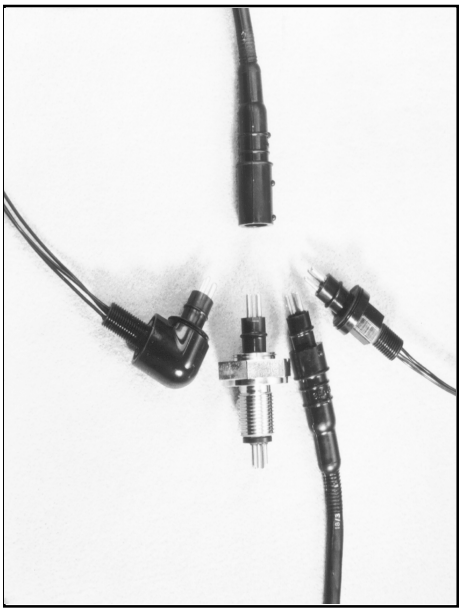



MAINTENANCE PROCEDURES
CONNECTORS

MAINTENANCE

The following procedures detail the maintenance requirements for the Rubber Molded Series and their associated parts. Even though this procedure appears simple, only qualified technicians should perform the maintenance. If connectors are periodically unmated SEA CON® recommends the following:

1. Before unmating ensure connectors are free of foreign contaminates. Visually check for and note any damage or abnormalities.

2. After unmating visually check for and note any damage, cuts or abnormalities.

3. Clean any grease, moisture or foreign particles from connectors and sealing surface area.

4. In the event the internal contact surfaces are dirty or have been exposed to water, the connector should be flushed with distilled or deionized water and thoroughly dried.

5. The surface should be dried using a low pressure (15 - 25 psi) gas stream of dry nitrogen or filtered compressed air (dry nitrogen is preferred). This drying procedure ensures the removal of any small foreign particles.

6. Electrically test the connector in accordance with the parameters of the system.

7. Apply a thin film of an appropriate silicone grease or spray to the sealing surface. Cover/ protect connector from foreign contaminates until ready to mate.

INSTALLATION & TORQUE OPERATIONS

1. Only qualified technicians should perform installation and torquing operations.

2. *Torque values specified apply only when connector is installed in a metal housing.

3. Torque values listed are maximum values not to be exceeded.

4. Locking sleeves are finger/hand tightened only.

**Torque values are noted with actual part and can be found in pages to follow.*

NOTE: Torque values referenced in this literature assume installation into dry metal threads. Please contact the factory for recommendations.

RUBBER MOLDED SERIES
TYPICAL RIGHT ANGLE AND STRAIGHT CONNECTOR INDEXING

INDEXING

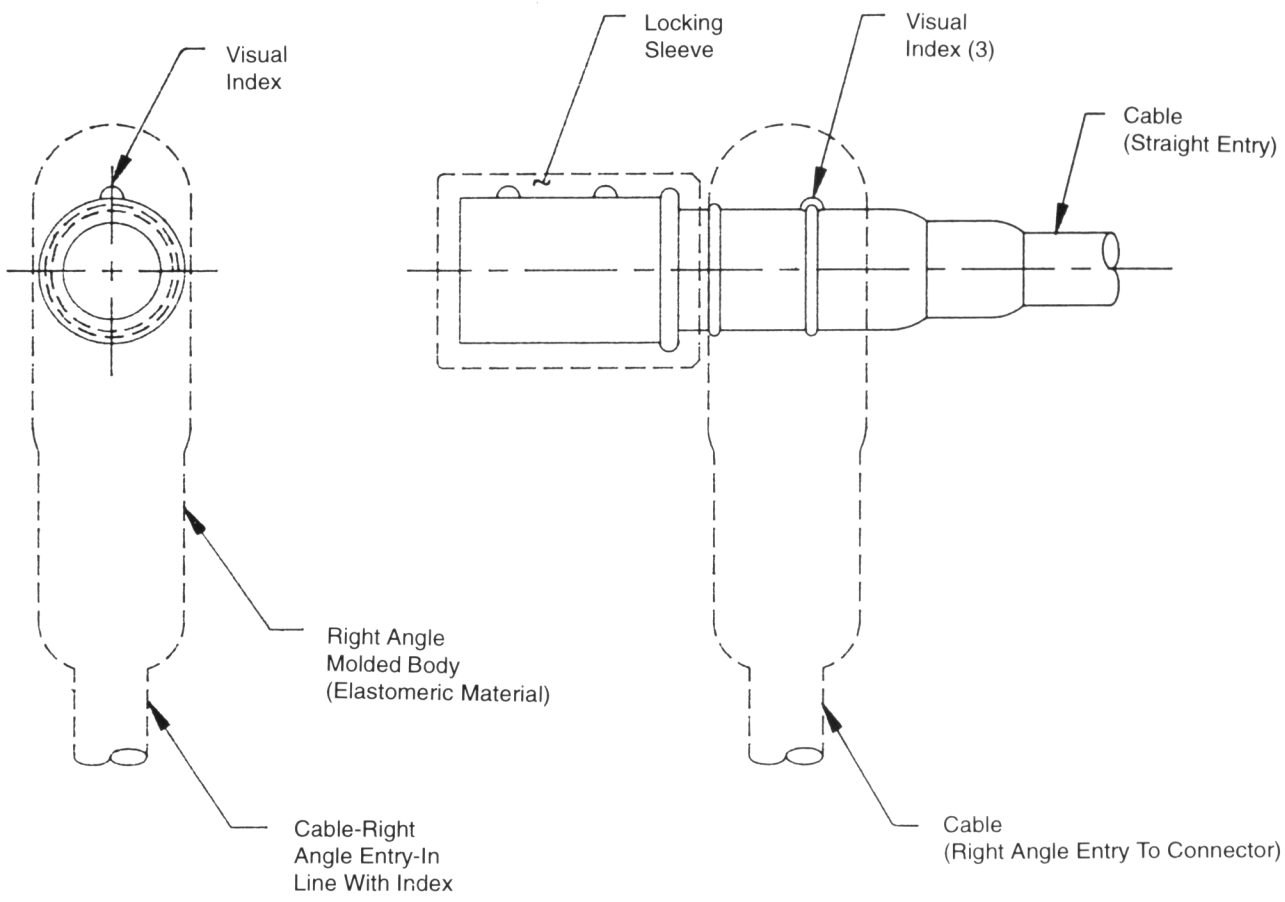

In the case of right angle connectors, the cable is always perpendicular to the index as shown

NOTE: Torque values referenced in this literature assume installation into dry metal threads. Please contact the factory for recommendations.

RUBBER MOLDED SERIES
TYPICAL MATED ASSEMBLY AND OPTIONS

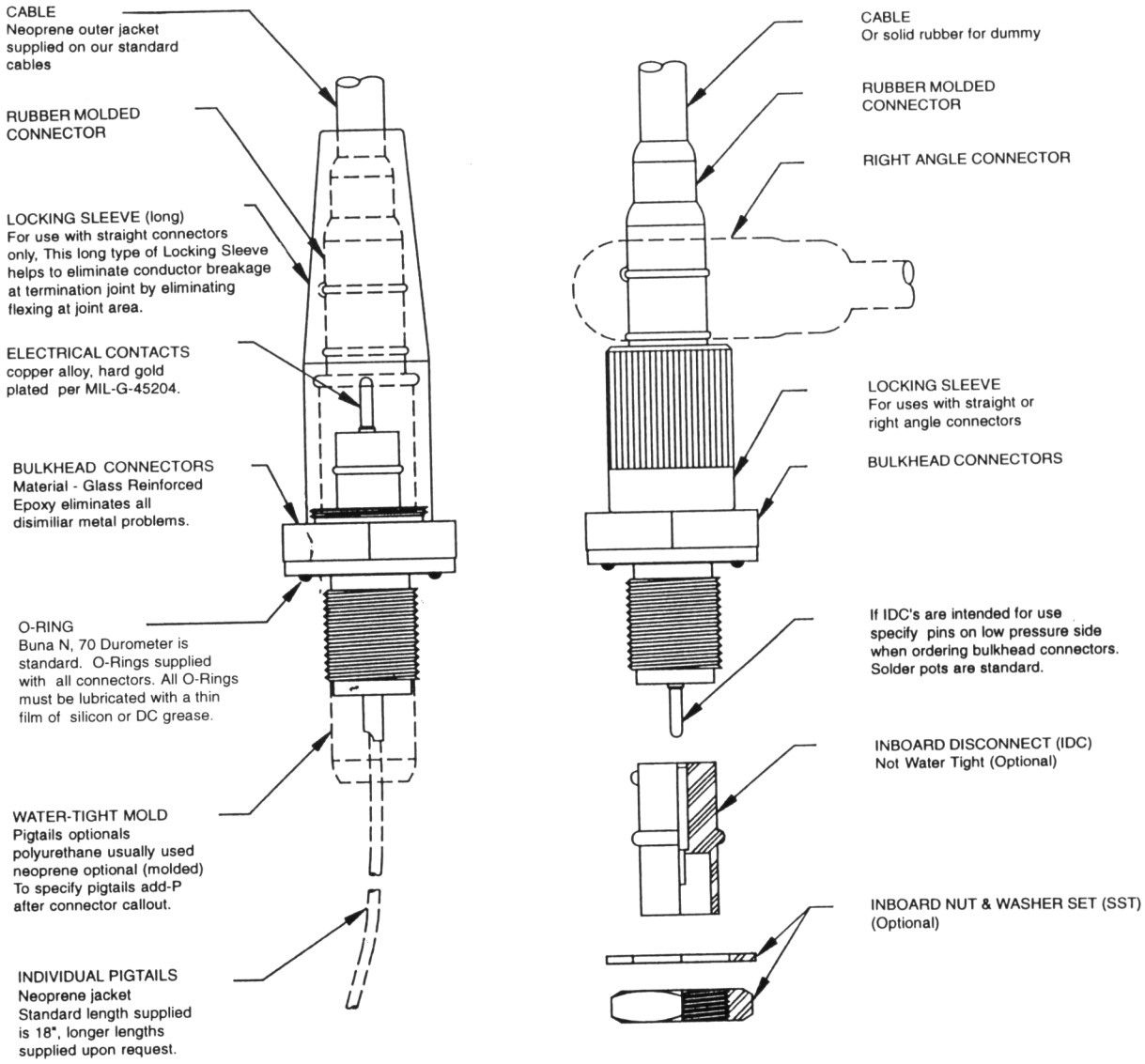

NOTE: Torque values referenced in this literature assume installation into dry metal threads. Please contact the factory for recommendations.

MATING

To ensure that the connectors are not damaged during mating/unmating, it is important to practice proper connect and disconnect procedures.

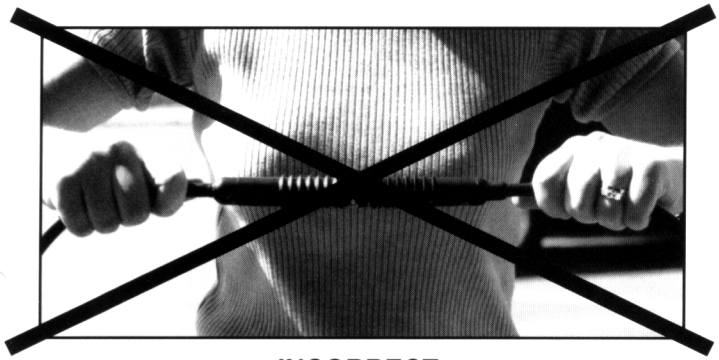

INCORRECT

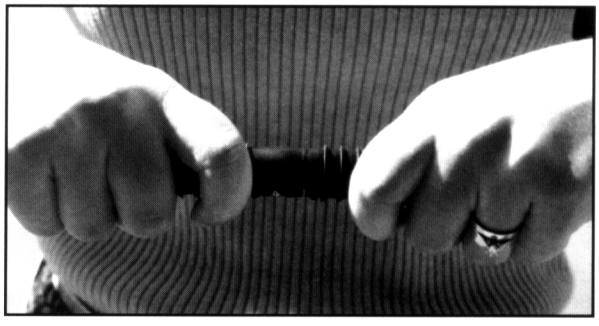

CORRECT

RMA-FS AND ASSOCIATED PARTS
STANDARD RUBBER MOLDED

IN-LINE SERIES

Material: Special Neoprene, molded
Contacts: Copper Alloy, Hard Gold Plated per MIL-G-45204
Voltage Rating: 600 VDC~*contact factory for higher voltage requirements*
Pressure Rating, Mated: up to 20,000 psi

NOTE: Torque values referenced in this literature assume installation into dry metal threads. Please contact the factory for recommendations.

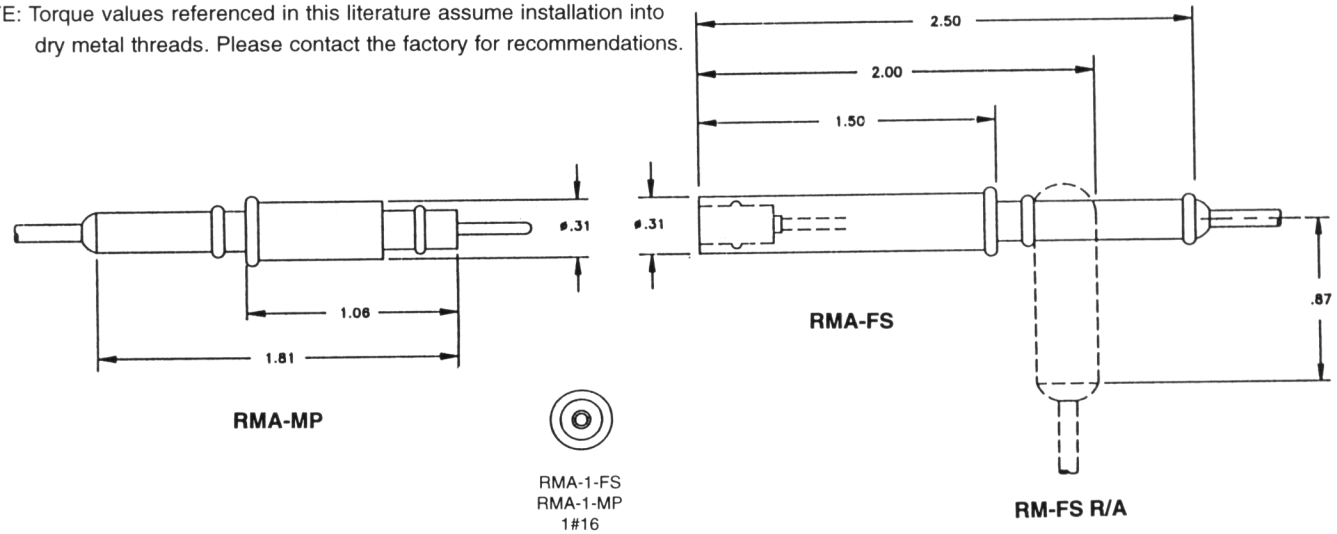

RMA-1-FS
RMA-1-MP
1#16
(cable: IN2 [#20 AWG])

LOCKING SLEEVES

A-MLS-D (AVAILABLE FOR RMA-MP)
A-FLS-D (AVAILABLE FOR RMA-FS, RMA-FS-R/A)

DUMMY CONNECTORS

RMA-FSD MATES TO RMA-MP
RMA-MPD-LP/HP TO RMA-FS & RMA-FS-R/A
RMA-MPD-HP MATES TO RMA-FS

Material: Special Neoprene, molded
Pressure Rating, Mated:
RMA-FSD (FOR LOW OR HIGH PRESSURE)
RMA-MPD-LP (≤ 4,000 PSI)
RMA-MPD-HP (≥ 4,000 PSI) (MALE PIN CONTACT REQUIRED)

SLIP-ON SERIES

Notes: Specify exact wire diameter when ordering.

Material: Special Neoprene, molded
Contacts: Brass, Hard Gold Plated per MIL-G-45204
Voltage Rating: 600 VDC~*contact factory for higher voltage requirements*
Pressure Rating, Mated: up to 20,000 PSI

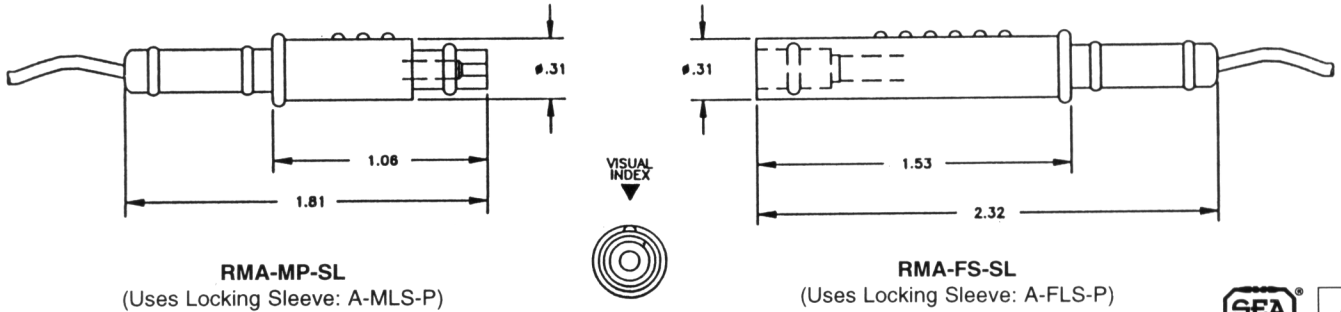

RMA-MP-SL
(Uses Locking Sleeve: A-MLS-P)

RMA-FS-SL
(Uses Locking Sleeve: A-FLS-P)

RMA-FS AND ASSOCIATED PARTS
MATEABLE BULKHEAD CONNECTORS

BULKHEAD CONNECTORS & MOUNTING REQUIREMENT
(MATES TO RMA-FS & RMA-FS-R/A)

Part Name: **RMA-BCL**
Material: 316 Stainless St., Internal Insulation-Special Neoprene
Contacts: Copper Alloy, Hard Gold Plated per MIL-G-45204
Pressure Rating, Mated: up to 20,000 psi

Description: Special insulating neoprene is compression molded to the metal body forming a reliable seal. The metal body can be made of stainless steel, aluminum or other metals

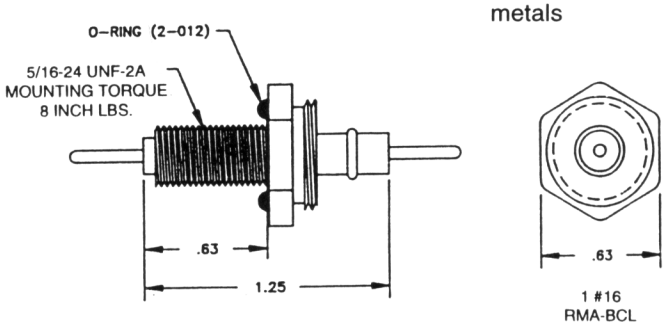

Part Name: **XSA-BC**
Material: Glass Reinforced Epoxy
Contacts:Copper Alloy, Hard Gold Plated per MIL-G-45204
Pressure Rating, Mated: up to 20,000 psi

Description: **XSA-BC**; The smallest standard connector in our non-metallic series, features an o-ring in the thread relief area. Available in single contact.

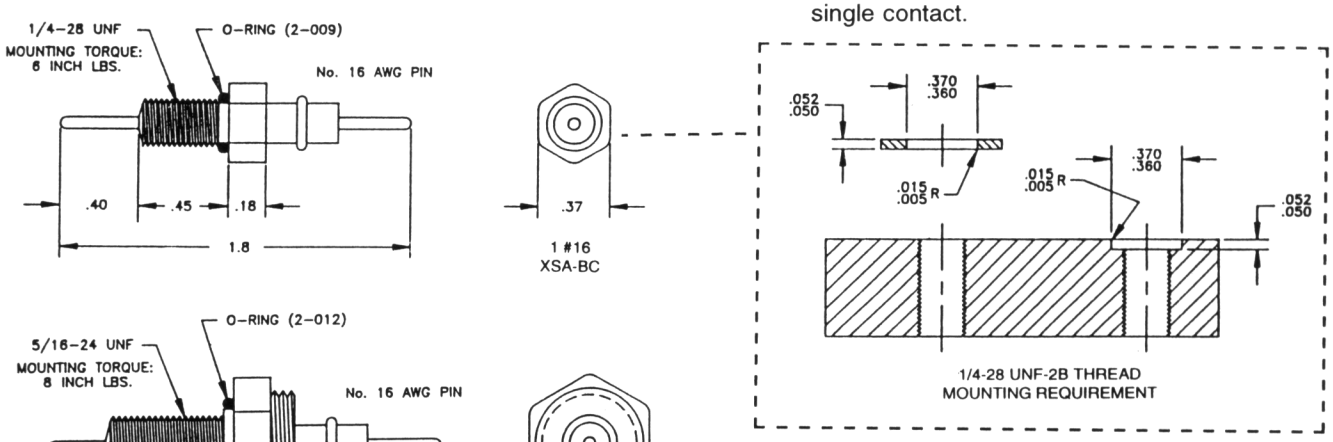

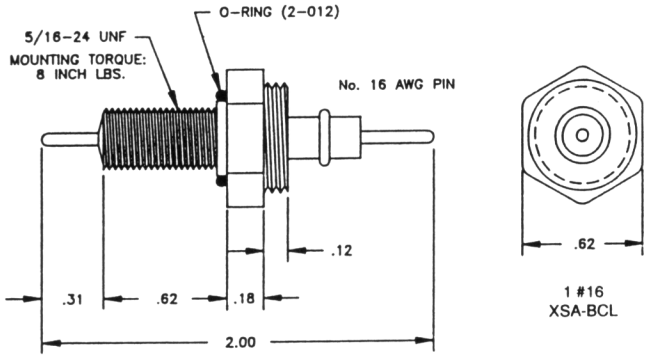

XSA-BCL; These are miniature, single contact connectors which feature a locking sleeve provision. The o-ring is located on a step under the hex and seals by flush mounting to the bulkhead.

NOTE: Torque values referenced in this literature assume installation into dry metal threads. Please contact the factory for recommendations.

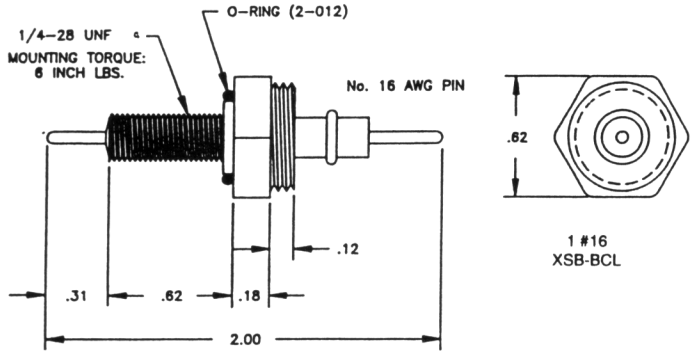

XSB-BCL; A miniature connector body very similar to the XSA and VSA, but utilizes a smaller installation thread. The small thread size requires care in installation to avoid damaging or cracking.

RMA-FS AND ASSOCIATED PARTS
MATEABLE BULKHEAD CONNECTORS

BULKHEAD CONNECTORS & MOUNTING REQUIREMENT
(MATES TO RMA-FS & RMA-FS-R/A)

Part Names: **XSC-BC, XSC-BCL**
Material: Glass Reinforced Epoxy
Contacts: Copper Alloy, Hard Gold Plated per MIL-G-45204
Pressure Rating, Mated: up to 10,000 psi

Description: These connectors feature a radial type o-ring seal, good for up to 10,000 PSI, mated. Available only in single contact.

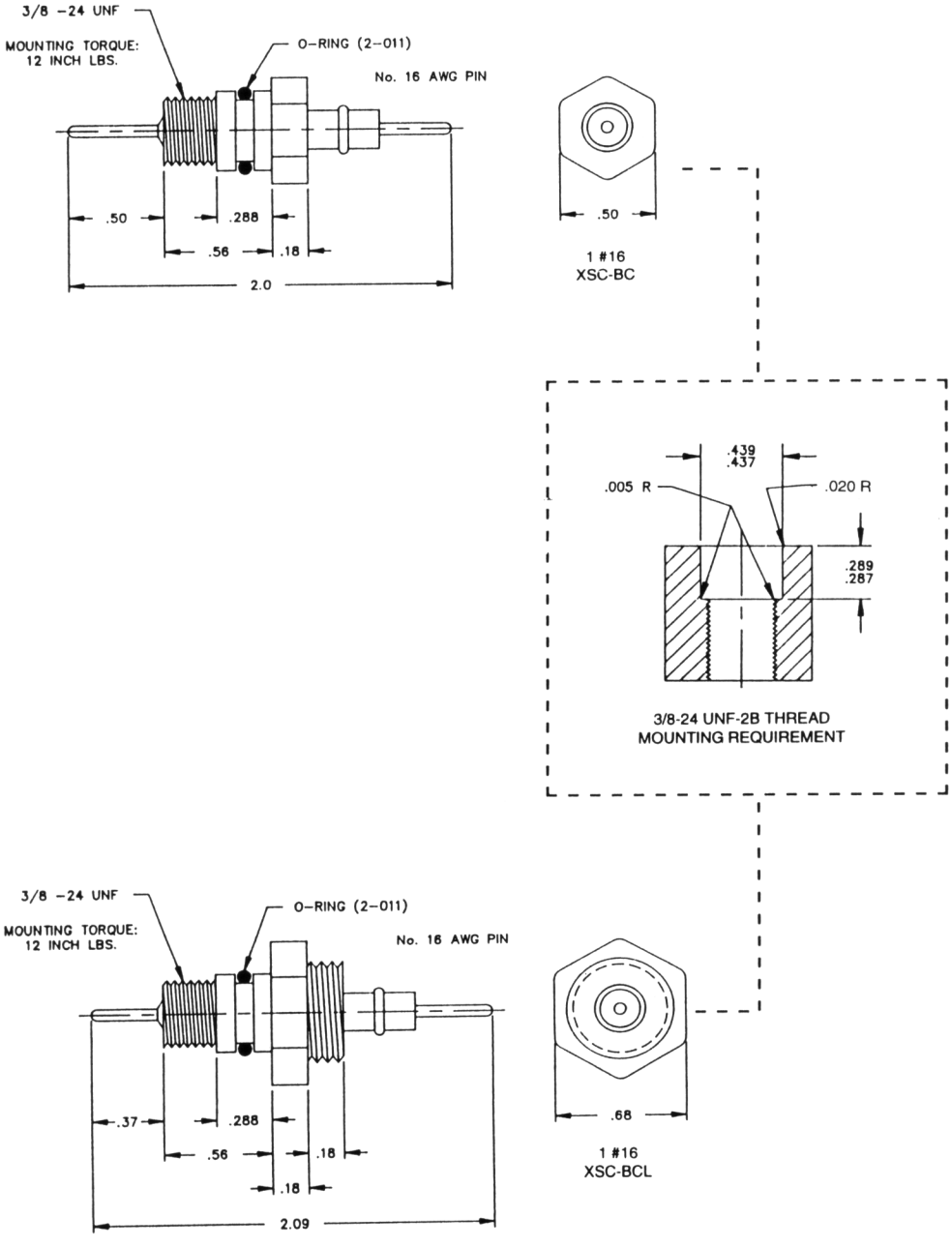

NOTE: Torque values referenced in this literature assume installation into dry metal threads. Please contact the factory for recommendations.

VMA-FS AND ASSOCIATED PARTS
REVERSED RUBBER MOLDED

IN-LINE SERIES

Material: Special Neoprene, Molded
Contacts: Copper Alloy, Hard Gold Plated per MIL-G-45204
Voltage Rating: 600 VDC~*contact factory for higher voltage requirements*
Pressure Rating, Mated: up to 20,000 psi

NOTE: Torque values referenced in this literature assume installation into dry metal threads. Please contact the factory for recommendations.

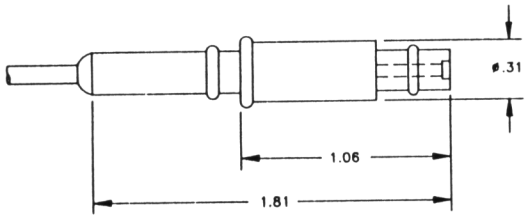

VMA-MP

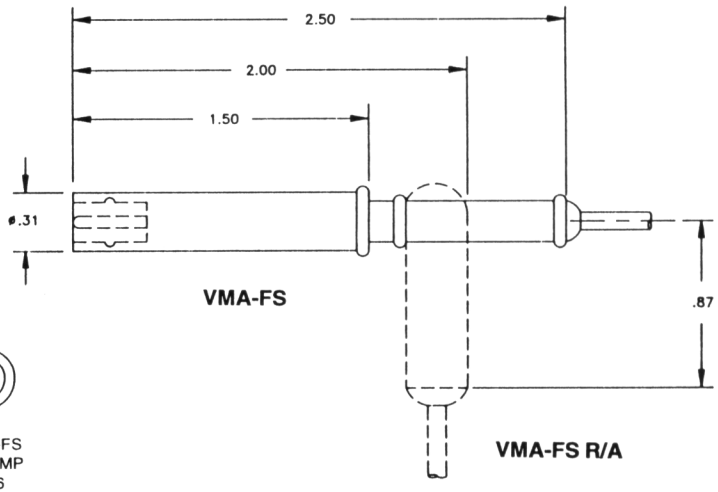

VMA-FS

VMA-FS R/A



VMA-1-FS
VMA-1-MP
1 #16
(cable: IN2 [#20 AWG])

LOCKING SLEEVES

A-MLS-D (AVAILABLE FOR VMA-MP)
A-FLS-D (AVAILABLE FOR VMA-FS, VMA-FS-R/A)

DUMMY CONNECTORS

VMA-FSD-LP MATES TO VMA-MP
VMA-FSD-HP MATES TO VMA-MP
VMA-MPD MATES TO VMA-FS & VMA-FS-R/A

Material: Special Neoprene, Molded
Pressure Rating, Mated:
VMA-FSD-LP ≤ 4,000 PSI (CONNECTOR BODY W/O MALE PIN)
VMA-FSD-HP ≥ 4,000 PSI (CONNECTOR BODY W/ MALE PIN)
VMA-MPD (FOR LOW OR HIGH PRESSURE)

SLIP-ON SERIES

Note: Specify exact wire diameter when ordering

Material: Special Neoprene, Molded
Contacts: Copper Alloy, Hard Gold Plated per MIL-G-45204
Voltage Rating: 600 VDC~*contact factory for higher voltage requirements*
Pressure Rating, Mated: up to 20,000 psi

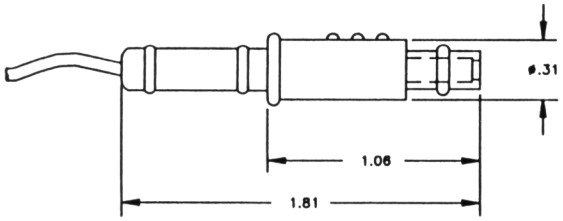

VMA-MP-SL
(Uses Locking Sleeve: A-MLS-P)

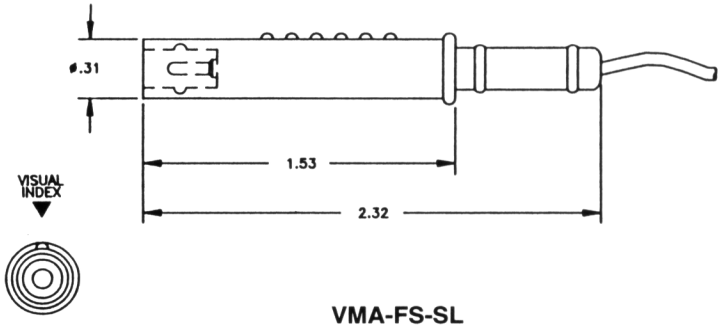

VMA-FS-SL
(Uses Locking Sleeve: A-FLS-P))

VMA-FS AND ASSOCIATED PARTS

MATEABLE BULKHEAD CONNECTORS

BULKHEAD CONNECTORS & MOUNTING REQUIREMENT

(MATES TO VMA-FS & VMA-FS-R/A)

Part Name: **VMA-BCL**
Material: 316 Stainless St., Internal Insulation-Special Neoprene
Contacts: Copper Alloy, Hard Gold Plated per MIL-G-45204
Pressure Rating, Mated: up to 20,000 psi

Description: Special insulating neoprene is compression molded to the metal body forming a reliable seal. The metal body can be made of stainless steel, aluminum or other metals

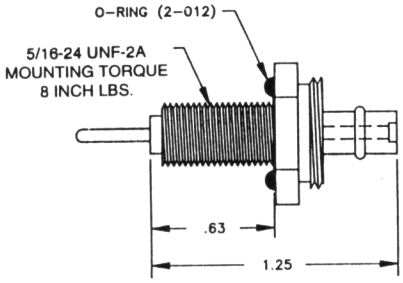

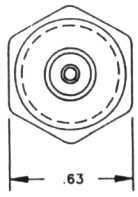

1 #16
VMA-BCL

Part Names: **VSA-BC, VSA-BCL, VSB-BCL**
Material: Glass Reinforced Epoxy
Contacts: Copper Alloy, Hard Gold Plated per MIL-G-45204
Pressure Rating, Mated: up to 20,000 psi

Description: **VSA-BC**; The smallest standard connector in our non-metallic series, features an o-ring in the thread relief area. Available in single contact.

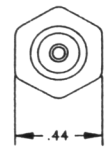

1 #16
VSA-BC

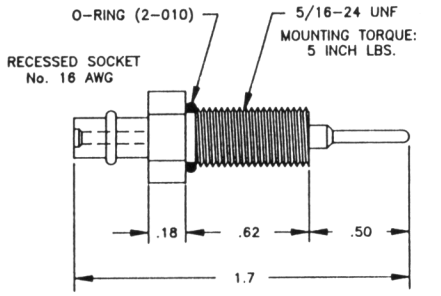

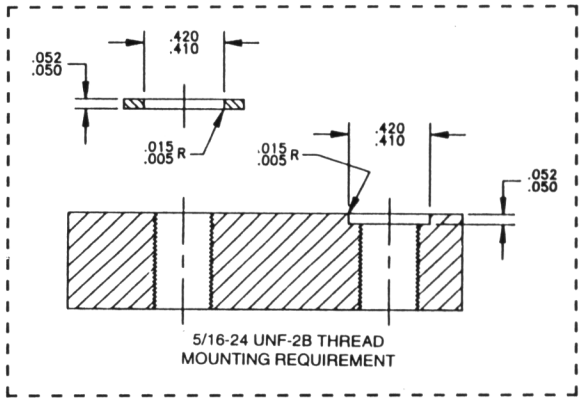

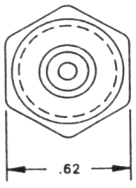

1 #16
VSA-BCL

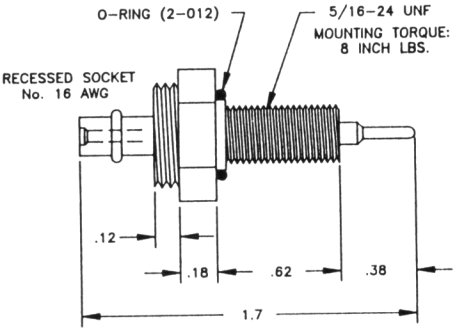

VSA-BCL; Miniature single contact connectors which feature a locking sleeve provision. The o-ring is located on a step under the hex and seals by flush mounting to the bulkhead.

NOTE: Torque values referenced in this literature assume installation into dry metal threads. Please contact the factory for recommendations.

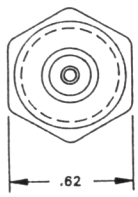

1 #16
VSB-BCL

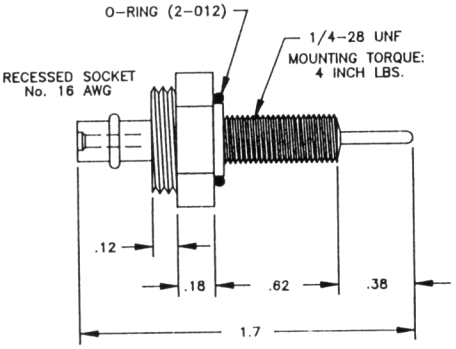

VSB-BCL; This is a miniature connector body very similar to the XSA and VSA, but utilizes a smaller installation thread. The small thread size requires care in installation to avoid damaging or cracking.

RMF-FS AND ASSOCIATED PARTS
STANDARD RUBBER MOLDED

IN-LINE SERIES

Material: Special Neoprene, Molded
Contacts: Copper Alloy, Hard Gold Plated per MIL-G-45204
Voltage Rating: 600 VDC~contact factory for higher voltage requirements
Pressure Rating, Mated: up to 10,000 psi

NOTE: Torque values referenced in this literature assume installation into dry metal threads. Please contact the factory for recommendations.

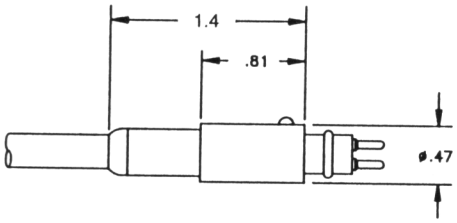

RMF-MP



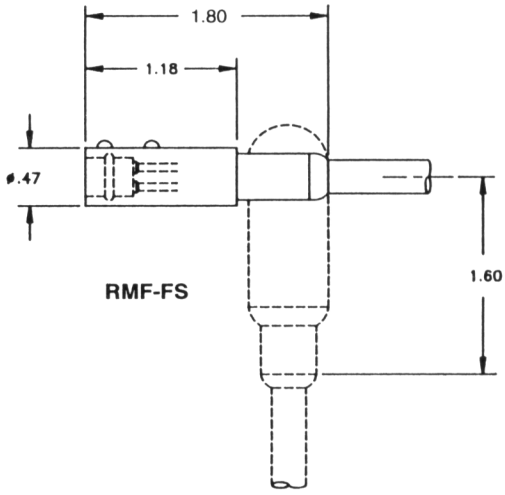

RMF-FS

RMF-FS R/A



RMF-C-FS/MP
COAX
22 AWG / 20 Ω
(Cable: CN4 or CN5)



RMF-1-FS/MP
1 #14
(Cable: 18/1SO)
or Equivalent



RMF-2-FS/MP
2 #16
(Cable: 18/2SJO)

LOCKING SLEEVES

F-MLS-D (AVAILABLE FOR RMF-MP)
F-FLS-D (AVAILABLE FOR RMF-FS, RMF-FS-R/A)

DUMMY CONNECTORS

Note: Specify number of conductors when ordering

RMF-FSD MATES TO RMF-MP
RMF-MPD-HP MATES TO RMF-FS & RMF-FS -R/A
RMF-MPD-LP MATES TO RMF-FS & RMF-FS-R/A

Material: Special Neoprene, Molded
Pressure Rating, Mated:
RMF-FSD (NO CONTACT REQUIRED)
RMF-MPD-HP (HIGH PRESSURE, ≥ 4,000 PSI, CONTACT REQUIRED)
RMF-MPD-LP (LOW PRESSURE, ≤ 4,000 PSI, NO CONTACT REQUIRED)

RMF-FS AND ASSOCIATED PARTS
MATEABLE BULKHEAD CONECTORS

BULKHEAD CONNECTORS & MOUNTING REQUIREMENT
(MATES TO RMF-FS & RMF-FS-R/A)

Part Names: **XSF-BC, XSF-BCL**
Material: Glass Reinforced Epoxy
Contacts: Copper Alloy, Hard Gold Plated per MIL-G-45204
Pressure Rating, Mated: up to 20,000 psi

Description: A connector very similar to the XSC except it has a larger front end which contains more contacts (or 1 COAX). Features radial o-ring.

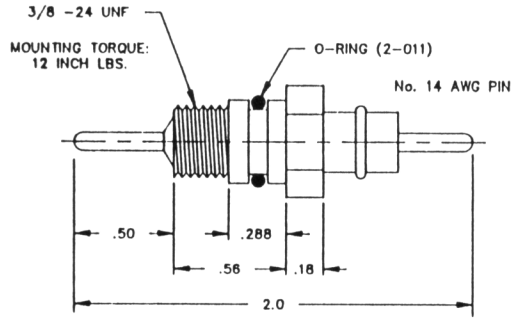

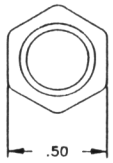

XSF-BC

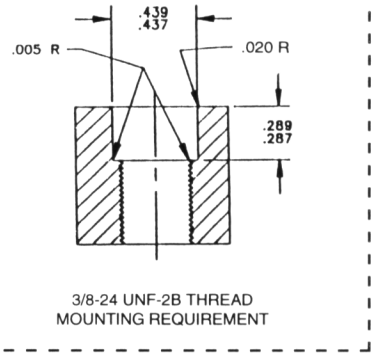

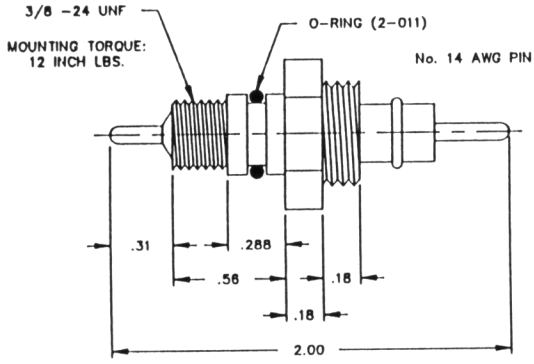

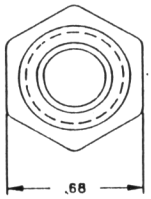

XSF-BCL



XSFC-BC/BCL
COAX
#22 AWG / 20 Ω

XSF-1-BC/BCL
1 #14

XSF-2-BC/BCL
2 #16

Part Name: **XSFDE-BCL**
Material: Glass Reinforced Epoxy
Contacts: Copper Alloy, Hard Gold Plated
Pressure Rating, Mated: up to 10,000 psi

Description: A double-ended connector which accepts a mating connector on either end. The same locking sleeve also fits both ends. The o-ring is captured in the hex.



XSFDE-C-BCL
COAX
#22 AWG / 20 Ω

XSFDE-1-BCL
1 #14

XSFDE-2-BCL
2 #16

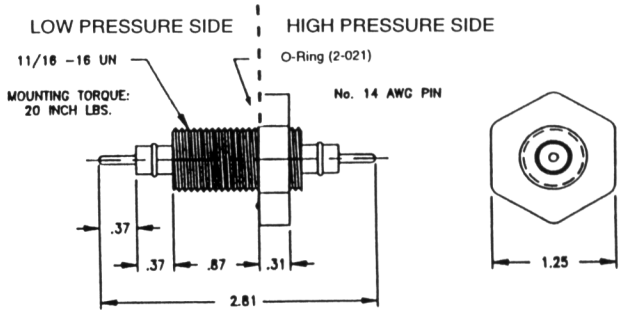

XSFDE-BCL
(FORMERLY KNOWN AS XSDE-BCL)

NOTE: Torque values referenced in this literature assume installation into dry metal threads. Please contact the factory for recommendations.

VMF-FS AND ASSOCIATED PARTS
REVERSED RUBBER MOLDED

IN-LINE SERIES

Material: Special Neoprene, Molded
Contacts: Copper Alloy, Hard Gold Plated per MIL-G-45204
Voltage Rating: 600 VDC~contact factory for higher voltage requirements
Pressure Rating, Mated: up to 20,000 psi

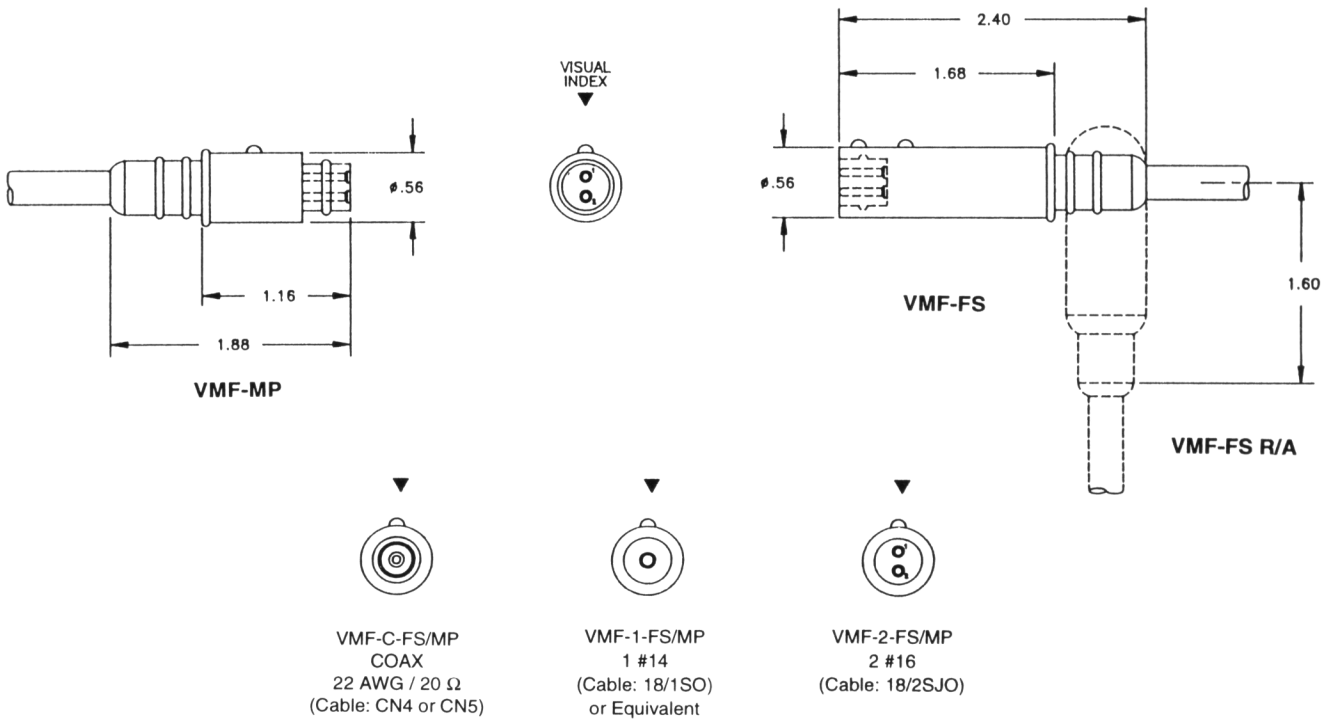

VMF-C-FS/MP
COAX
22 AWG / 20 Ω
(Cable: CN4 or CN5)

VMF-1-FS/MP
1 #14
(Cable: 18/1SO)
or Equivalent

VMF-2-FS/MP
2 #16
(Cable: 18/2SJO)

LOCKING SLEEVES

VSF-MLS-D (AVAILABLE FOR VMF-MP)
VSF-FLS-D (AVAILABLE FOR VMF-FS,VMF-FS-R/A)

DUMMY CONNECTORS

Note: Specify number of conductors when ordering

VMF-FSD-HP MATES TO VMF-MP
VMF-FSD-LP MATES TO VMF-MP
VMF-MPD MATES TO VMF-FS & VMF-FS -R/A

MATERIAL: SPECIAL NEOPRENE, MOLDED
PRESSURE RATING, MATED:
VMF-MPD (NO CONTACT REQUIRED)
VMF-FSD-HP (HIGH PRESSURE, ≥ 4,000 PSI CONTACT REQUIRED)
VMF-FSD-LP (LOW PRESSURE, ≤ 4,000 PSI NO CONTACT REQUIRED)

NOTE: Torque values referenced in this literature assume installation into dry metal threads. Please contact the factory for recommendations.

VMF-FS AND ASSOCIATED PARTS
MATEABLE BULKHEAD CONNECTORS

BULKHEAD CONNECTORS
(MATES TO VMF-FS & VMF-FS-R/A)

Part Name: **VMF-BCL**
Material: 316, Stainless Steel
Contacts: Copper Alloy, Hard Gold Plated per MIL-G-45204
Pressure Rating, Mated: up to 20,000 psi

NOTE: Torque values referenced in this literature assume installation into dry metal threads. Please contact the factory for recommendations.

Description: Special insulating neoprene is permanently molded to the metal shell. These types of connectors are used where physical abuse would be too great for the non-metallic (glass reinforced epoxy) series.

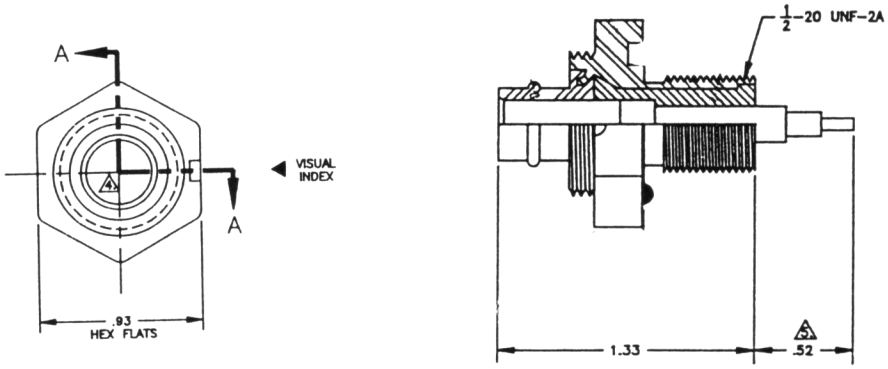



VMF-C-BCL
COAX
#22 AWG / 20 Ω

VMF-1-BCL
1 #14

VMF-2-BCL
1#16

Part Name: **VSF-BCL**
Material: Glass Reinforced Epoxy
Contacts:Copper Alloy, Hard Gold Plated per MIL-G-45204
Pressure Rating, Mated: up to 20,000 psi

Description: Available in coax, 1 and 2 contacts, features a captive o-ring and a 1/2-20 installation thread. Like all bulkhead connectors in this series, is non-metallic, thus eliminating any dissimilar metal problems. Has only a visual index arrangement.

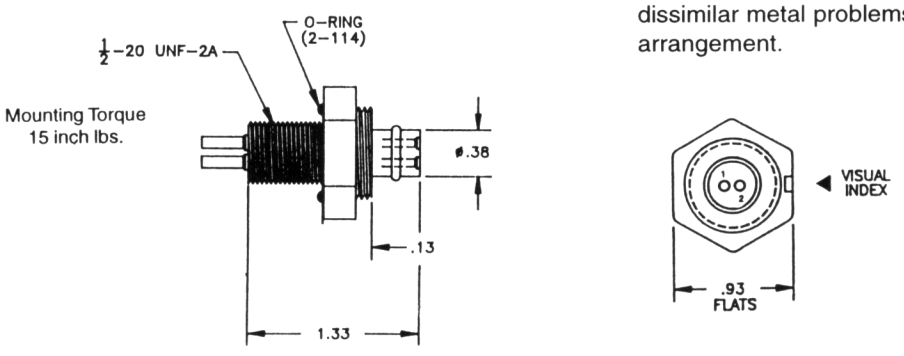

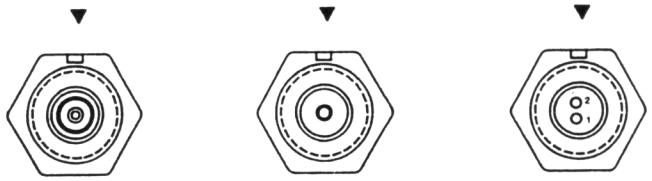

VSF-C-BCL
COAX
#22 AWG / 20 Ω

VSF-1-BCL
1 #14

VSF-2-BCL
2 #16

LMG-FS AND ASSOCIATED PARTS
STANDARD RUBBER MOLDED

IN-LINE SERIES

Note: Available with grippers, must specify.

Material: Special Neoprene, Molded
Contacts: Copper Alloy, Hard Gold Plated per MIL-G-45204
Voltage Rating: 600 VDC~contact factory for higher voltage requirements
Pressure Rating, Mated: up to 20,000 psi

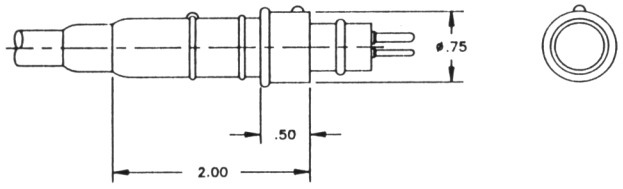

LMG-MP

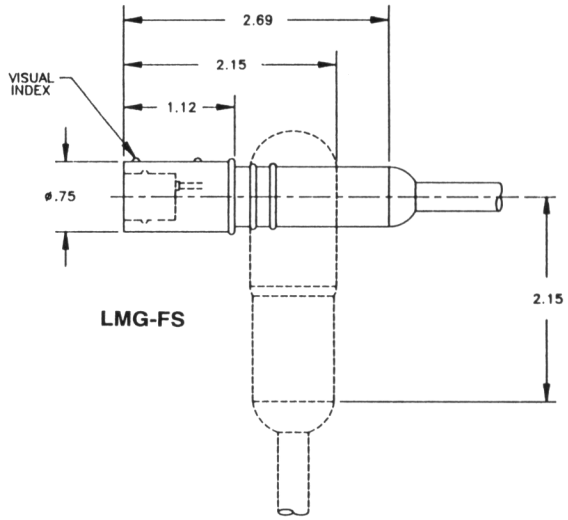

LMG-FS

LMG-FS R/A

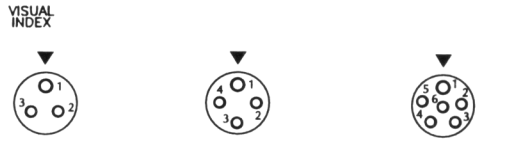

LMG-3-FS
1 #14
2 #16
(Cable: 18/3SO)

LMG-4-FS
1 #14
3 #16
(Cable: 18/4SO)

LMG-6-FS
1 #14
5 #16
(Cable: 18/6SO)

LOCKING SLEEVES

G-MLS-D (AVAILABLE FOR LMG-MP)
G-FLS-D (AVAILABLE FOR LMG-FS, LMG-FS-R/A)

DUMMY CONNECTORS

Note: Specify number of conductors when ordering

LMG-FSD MATES TO LMG -MP
LMG-MPD MATES TO LMG-FS & LMG-FS-R/A

MATERIAL: SPECIAL NEOPRENE, MOLDED
PRESSURE RATING, MATED:
LMG-FSD (FOR LOW OR HIGH PRESSURE, NO CONTACT REQUIRED)
LMG-MPD-HP (HIGH PRESSURE, ≥ 4,000 PSI, CONTACT REQUIRED)
LMG-MPD-LP (LOW PRESSURE, ≤ 4,000 PSI NO CONTACT REQUIRED)

NOTE: Torque values referenced in this literature assume installation into dry metal threads. Please contact the factory for recommendations.

LMG-FS AND ASSOCIATED PARTS
MATEABLE BULKHEAD CONNECTORS

Part Name: **LSG-BC, LSG-BCL**
Material: Glass Reinforced Epoxy
Contacts: Copper Alloy, Hard Gold Plated per MIL-G-45204
Pressure Rating, Mated: up to 3,000 psi

Description: These non-metallic connectors have the same mating connectors (as shown). They have a variety of thread sizes and hex arrangements. The LSG-BCL has a locking sleeve provision.

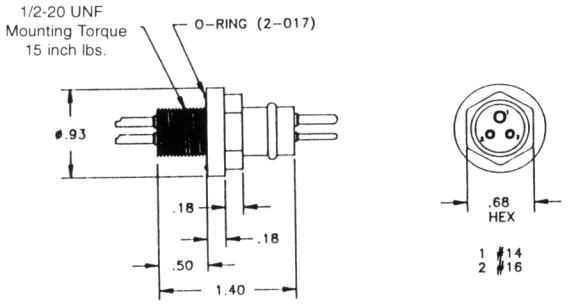

LSG-3-BC

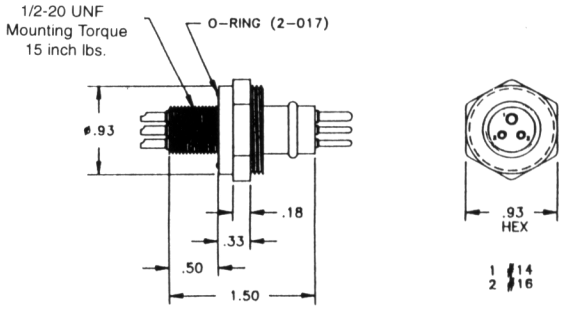

LSG-3-BCL

Note: Does not mate to RMG-FS and RMG-FS R/A

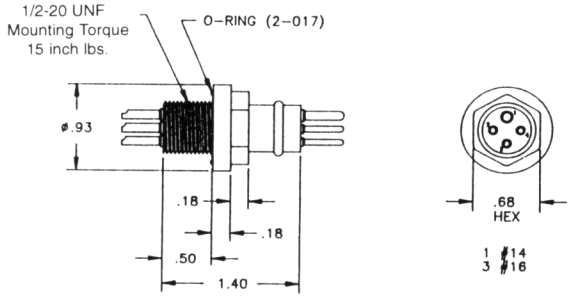

LSG-4-BC

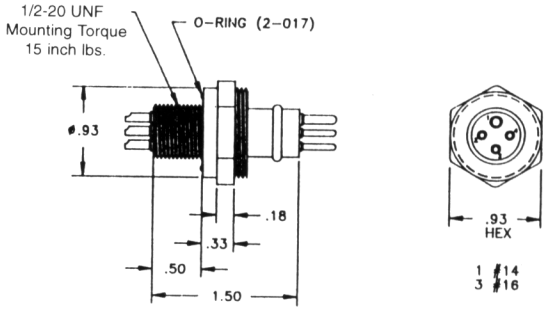

LSG-4-BCL

Note: Does not mate to RMG-FS and RMG-FS R/A

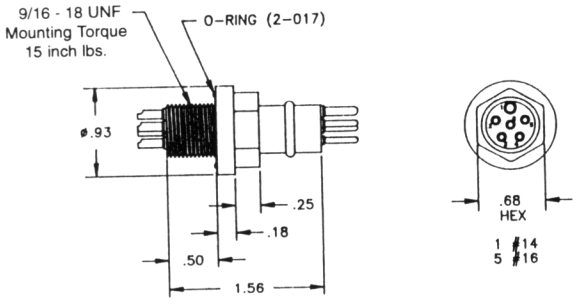

LSG-6-BC

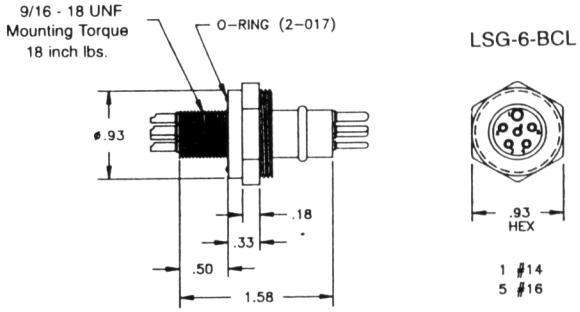

LSG-6-BCL

Note: Also mates to RMG-FS and RMG-FS R/A

NOTE: Torque values referenced in this literature assume installation into dry metal threads. Please contact the factory for recommendations.

SEACON AC

LMG-FS AND ASSOCIATED PARTS
MATEABLE BULKHEAD CONNECTORS

Part Name: **LSG-BC-SC (Formerly known as LSK-BC-SC)**
Material: Glass Reinforced Epoxy
Contacts: Copper Alloy, Hard Gold Plated per MIL-G-45204
Pressure Rating, Mated: up to 5,000 psi

Description: These non-metallic connectors have the same mating connectors (as shown) and use a radial o-ring seal.

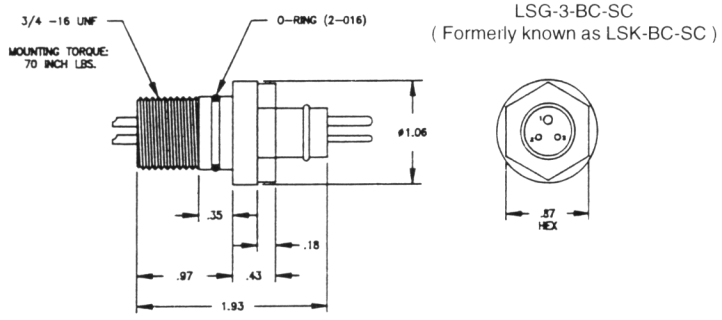

LSG-3-BC-SC
(Formerly known as LSK-BC-SC)

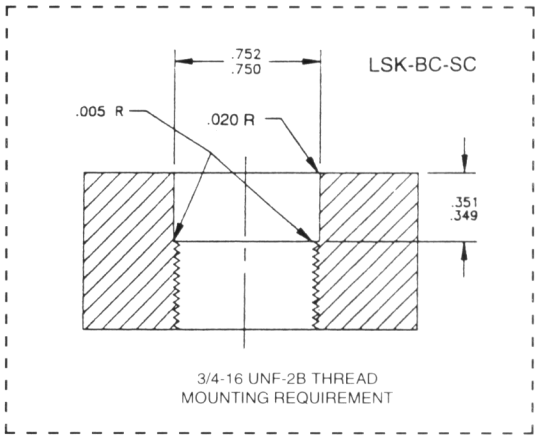

Note: Does not mate to RMG-FS and RMG-FS R/A.

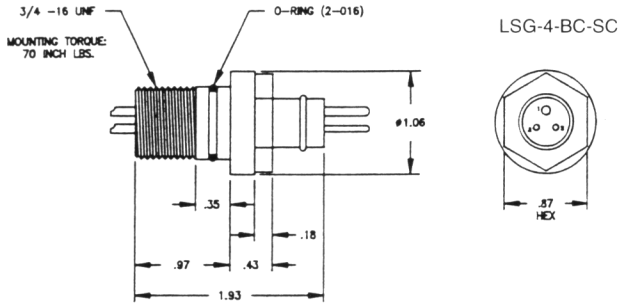

LSG-4-BC-SC



LSG-3-BC-SC
1 #14
2 #16

LSG-4-BC-SC
1 #14
3 #16

LSG-6-BC-SC
1 #14
5 #16

Note: Does not mate to RMG-FS and RMG-FS R/A.

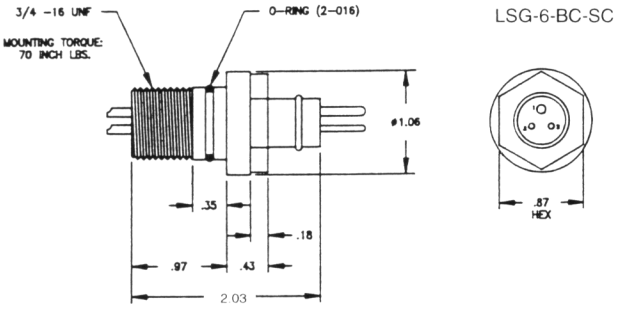

LSG-6-BC-SC

Note: Also mates to RMG-FS and RMG-FS R/A.

NOTE: Torque values referenced in this literature assume installation into dry metal threads. Please contact the factory for recommendations.

LMG-FS AND ASSOCIATED PARTS
MATEABLE BULKHEAD CONNECTORS

BULKHEAD CONNECTORS
(MATES TO LMG FS & LMG-FS-R/A)
DOES NOT MATE TO THE RMG-FS OR RMG-FS-R/A

Part Name: **LSG-BC-HP**
Material: Glass Reinforced Epoxy
Contacts: Copper Alloy, Hard Gold Plated per MIL-G-45204
Pressure Rating, Mated: up to 10,000 psi

Description: The same style as the LSG's, but these are for higher pressure.

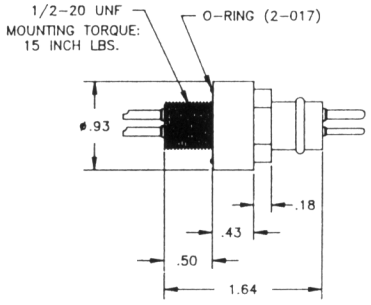

LSG-3-BC-HP

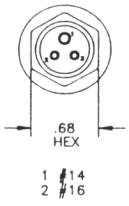

Note: Does not mate to RMG-FS and RMG-FS R/A

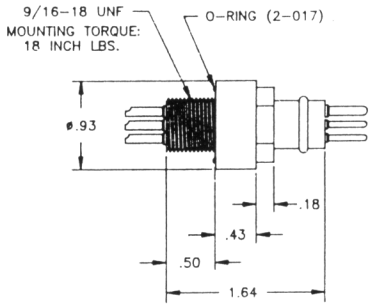

LSG-4-BC-HP

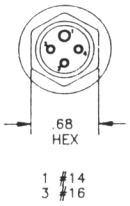

Note: Does not mate to RMG-FS and RMG-FS R/A

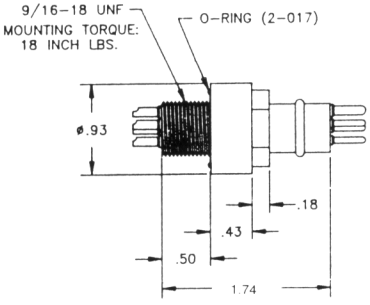

LSG-6-BC-HP

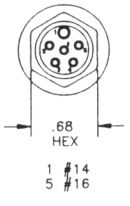

Note: Also mates to RMG-FS and RMG-FS R/A

NOTE: Torque values referenced in this literature assume installation into dry metal threads. Please contact the factory for recommendations.

RMG-FS AND ASSOCIATED PARTS
STANDARD RUBBER MOLDED

IN-LINE SERIES

Note: Available with grippers, must specify.

Material: Special Neoprene, Molded
Contacts: Copper Alloy, Hard Gold Plated per MIL-G-45204
Voltage Rating: 600 VDC~contact factory for higher voltage requirements
Pressure Rating, Mated: up to 20,000 psi

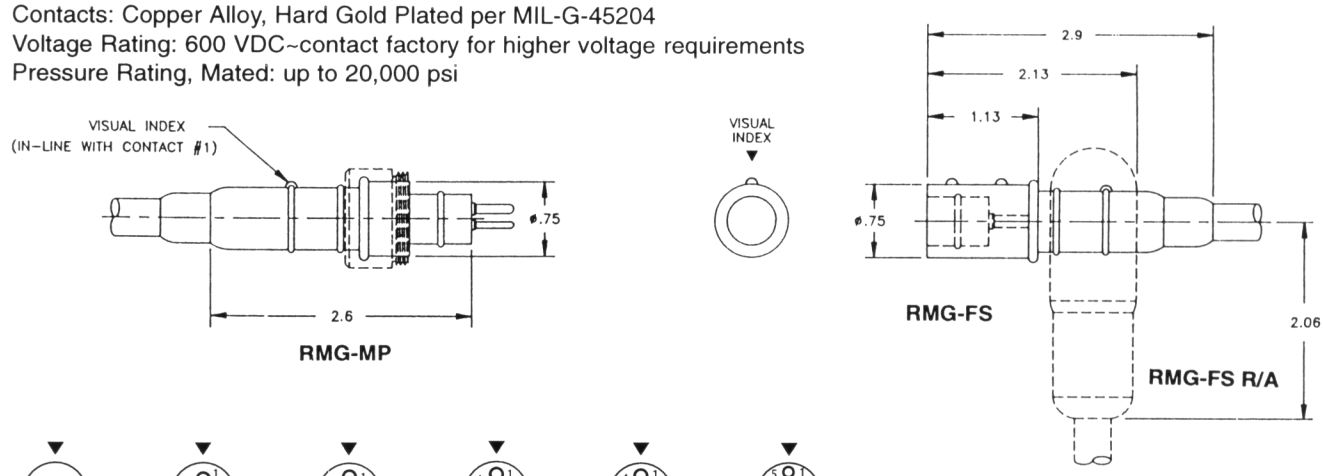

RMG-1-FS	RMG-2-FS	RMG-3-FS	RMG-4-FS	RMG-5-FS	RMG-6-FS
1 #10	1 #10	1 #10	1 #14	1 #14	1 #14
(Cable: 18/1SO)	1 #14	2 #14	3 #16	4 #16	5 #16
or Equivalent	(Cable: 18/2SO)	(Cable: 18/3SO)	(Cable: 18/4SO)	(Cable: 18/5SO)	(Cable:18/6SO)

LOCKING SLEEVES

Note: Must specify cable OD when using G-FLS-X

G-MLS-D (AVAILABLE FOR RMG-MP, (WOC))
G-FLS-D (AVAILABLE FOR RMG-FS, RMG-FS-R/A, WOC)
OPTIONAL: SST, FOR SPECIFIC MATERIALS CONTACT FACTORY.

DUMMY CONNECTORS

Note: specify number of conductors when ordering

RMG-FSD MATES TO RMG-MP, BCL & XSG-BCL,
XSG-PBC, XSG-PBCL & XSG-PBCLM
RMG-MPD MATES TO RMG-FS & RMG FS-R/A

MATERIAL: SPECIAL NEOPRENE, MOLDED
PRESSURE RATING, MATED:
RMG-FSD (FOR LOW OR HIGH PRESSURE, NO CONTACT REQUIRED)
RMG-MPD-LP (LOW PRESSURE ≤ 4,000 PSI)
RMG-MPD-HP (HIGH PRESSURE ≥ 4,000 PSI)

WOC CONNECTORS

Note: WOC stands for "without cable." The connectors are supplied as shown below for installation in the field and/or to non-neoprene jacketed cables. Bonding can be achieved by molding to the connectors shown using polyurethane with appropriate primers.

Part Name: **RMG-FS WOC, RMG-MP WOC**
Material: Special Neoprene, Molded
Contacts: Brass, Hard Gold Plated per MIL-G-45204
Voltage Rating: 600 VDC~contact factory for higher voltage requirements
Pressure Rating, Mated: up to 20,000 psi

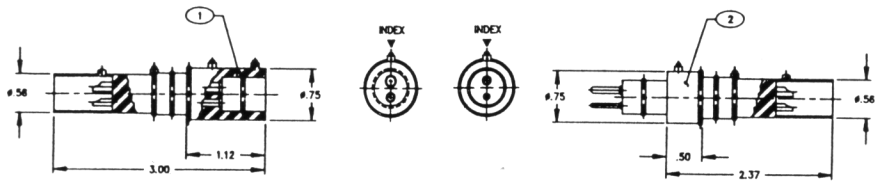

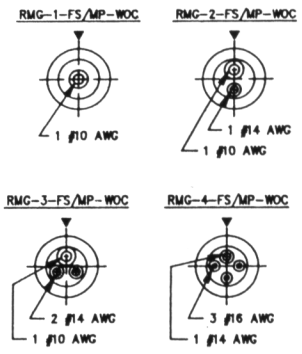

NOTE: Torque values referenced in this literature assume installation into dry metal threads. Please contact the factory for recommendations.

SEACON AC

RMG-FS AND ASSOCIATED PARTS
MATEABLE BULKHEAD CONNECTORS

BULKHEAD CONNECTORS
(MATES TO RMG FS & RMG-FS-R/A)

Part Name: **RMG-BCL**
Material: 316 Stainless St., Internal Insulation-Special Neoprene
Contacts: Copper Alloy, Hard Gold Plated per MIL-G-45204
Pressure Rating, Mated: up to 20,000 psi

Description: Special Insulating neoprene is permanently molded to the metal shell. These types of connectors are used where physical abuse would be too great for the non-metallic (glass reinforced epoxy) series.

Part Name: **XSG-BCL**
Material: Glass Reinforced Epoxy
Contacts: Copper Alloy, Hard Gold Plated per MIL-G-45204
Pressure Rating, Mated: up to 20,000 psi

Description: One of our oldest connectors in the non-metallic series, with male pin as shown. Connector is one homogeneously molded unit. Available with different thread lengths as indicated.

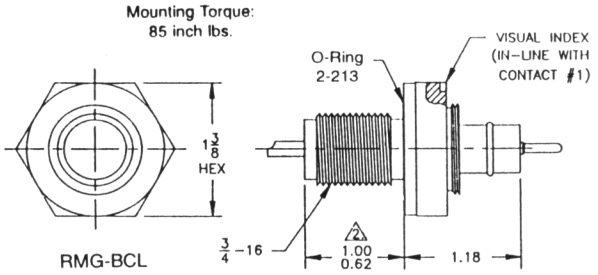

RMG-BCL
XSG-BCL

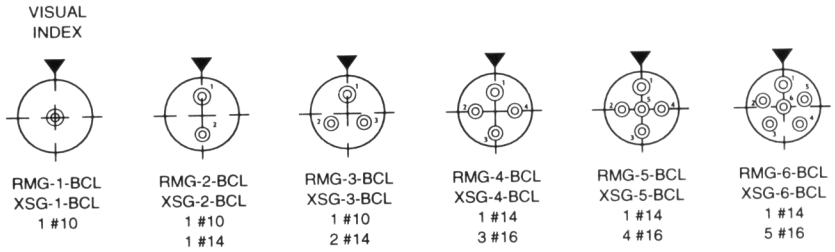

RMG-1-BCL
XSG-1-BCL
1 #10

RMG-2-BCL
XSG-2-BCL
1 #10
1 #14

RMG-3-BCL
XSG-3-BCL
1 #10
2 #14

RMG-4-BCL
XSG-4-BCL
1 #14
3 #16

RMG-5-BCL
XSG-5-BCL
1 #14
4 #16

RMG-6-BCL
XSG-6-BCL
1 #14
5 #16

Part Name: **XSG-BCL-P-R/A**
Material: Glass Reinforced Epoxy
Contacts: Copper Alloy, Hard Gold Plated per MIL-G-45204
Pressure Rating, Mated: up to 20,000 psi

Description: A low profile right angle bulkhead connector featuring electrical conductor protruding from the connector body. Brass thread ring is available.

Note: Pigtails are teflon insulated #18 AWG

NOTE: Torque values referenced in this literature assume installation into dry metal threads.
Please contact the factory for recommendations.

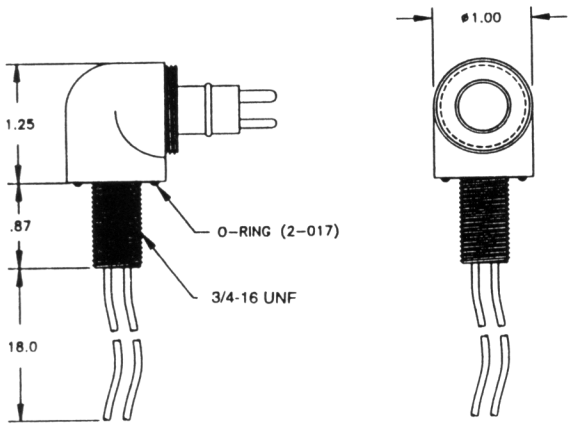

XSG-BCL-P-R/A



XSG-2-BCL-P-R/A
1 # 10
1 # 14

XSG-3-BCL-P-R/A
1 # 10
2 # 14

XSG-4-BCL-P-R/A
1 # 14
3 # 16

RMG-FS AND ASSOCIATED PARTS
MATEABLE BULKHEAD CONNECTORS

BULKHEAD CONNECTORS & MOUNTING REQUIREMENT
(MATES TO RMG FS & RMG-FS-R/A)

Part Name: **XSG-PBC, XSG-PBCL**
Material: Glass Reinforced Epoxy
Contacts: Copper Alloy, Hard Gold Plated per MIL-G-45204
Pressure Rating, Mated: up to 5,000 psi

Description: XSG format which utilizes a radial seal to reduce mounting dimensions. PBCL accepts locking sleeves.

Note: Pigtails are teflon insulated #18 AWG

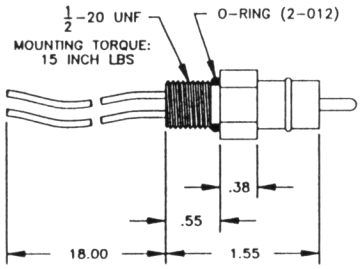

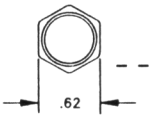

XSG-PBC



XSG-1-PBC
XSG-1-PBCL
1 # 10



XSG-2-PBC
XSG-2-PBCL
1 # 10
1 # 14



XSG-3-PBC
XSG-3-PBCL
1 # 10
2 # 14



XSG-4-PBC
XSG-4-PBCL
1 # 14
3 # 16

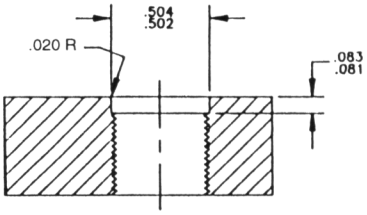

1/2-20 UNF-2B Thread
MOUNTING REQUIREMENT

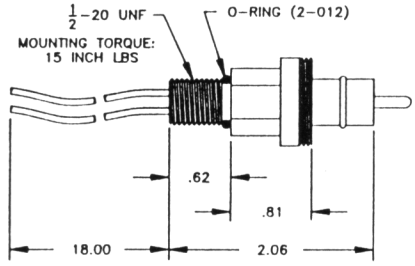

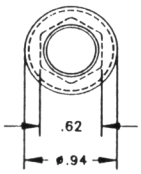

XSG-PBCL

Part Name: **XSG-PBCLM**
Material: Glass Reinforced Epoxy
Contacts: Copper Alloy, Hard Gold Plated per MIL-G-45204
Pressure Rating, Mated: up to 5,000 psi

Description: Flush mount version does not require counter bore to seal against bulkhead.

Note: Pigtails are teflon insulated #18 AWG

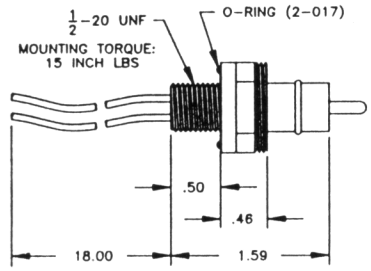

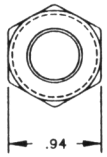

XSG-PBCLM



XSG-1-PBCLM
1 # 10



XSG-2-PBCLM
1 # 10
1 # 14



XSG-3-PBCLM
1 # 10
2 # 14



XSG-4-PBCLM
1 # 14
3 # 16

NOTE: Torque values referenced in this literature assume installation into dry metal threads. Please contact the factory for recommendations.

RMG-FS AND ASSOCIATED PARTS
MATEABLE BULKHEAD CONNECTORS

BULKHEAD CONNECTORS
(MATES TO RMG FS & RMG-FS-R/A)

Part Names: **RMGS-BC, RMGS-BCL**
Material: 316 Stainless Steel
Contacts: Copper Alloy, Hard Gold Plated per MIL-G-45204
Pressure Rating, Mated: up to 5,000 psi
(Special Glass Sealed, Bi-Directional.
Open Face Seal Available On Special Request)

Description: Features a stainless steel body, insulating neoprene, and pipe thread for sealing to bulkhead. No O-Ring required for sealing.

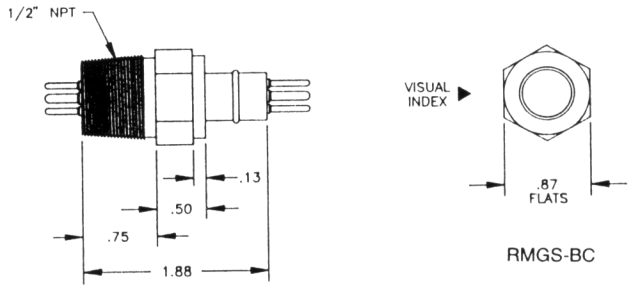

RMGS-BC

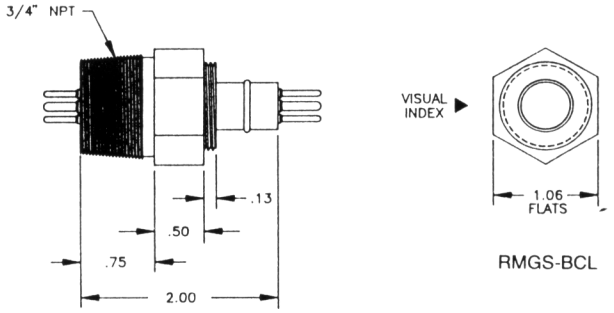

RMGS-BCL

Note: Minimum order of 20 required.



RMGS-1-BC/BCL	RMGS-2-BC/BCL	RMGS-3-BC/BCL	RMGS-4-BC/BCL
1 #10	1 #10 1 #14	1 #10 2 #14	1 #14 3 #16

NOTE: Torque values referenced in this literature assume installation into dry metal threads. Please contact the factory for recommendations.

VMG-FS AND ASSOCIATED PARTS
REVERSED RUBBER MOLDED

IN-LINE SERIES

Material: Special Neoprene, Molded
Contacts: Copper Alloy, Hard Gold Plated per MIL-G-45204
Voltage Rating: 600 VDC~contact factory for higher voltage requirements
Pressure Rating, Mated: up to 20,000 psi

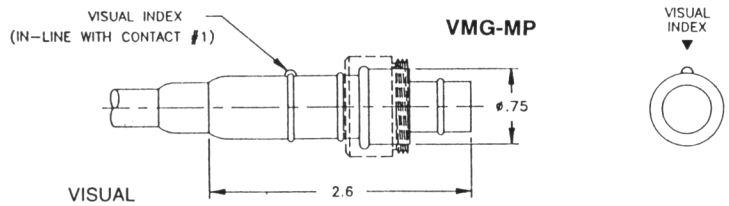

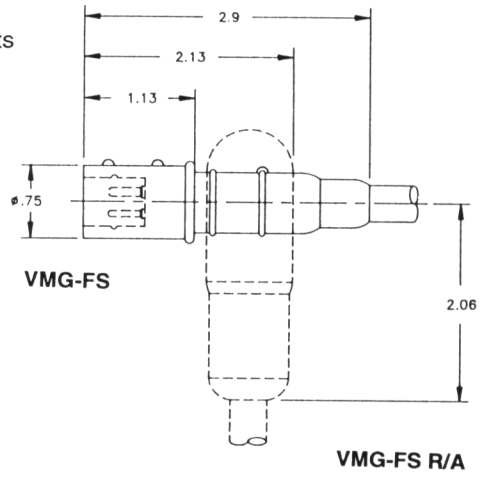



VMG-1-FS	VMG-2-FS	VMG-3-FS	VMG-4-FS
1 #14	1 #14	1 #14	1 #14
(Cable: 18/1SO)	1 #16	2 #16	3 #16
or Equivalent	(Cable:18/2SO)	(Cable: 18/3SO)	(Cable: 18/4SO)

LOCKING SLEEVES

Note: Must specify cable OD when using G-FLS-X

G-MLS-D (AVAILABLE FOR VMG-MP(WOC))
G-FLS-D (AVAILABLE FOR VMG-FS, VMG-FS-R/A,WOC & BCL'S)

DUMMY CONNECTORS

Note: specify number of conductors when ordering

VMG-FSD MATES TO VMG-MP
VMG-MPD MATES TO VMG-FS & VMG-FS-R/A

MATERIAL: SPECIAL NEOPRENE, MOLDED
PRESSURE RATING, MATED:
VMG-FSD-LP (LOW PRESSURE ≤ 4,000PSI, NO CONTACT REQUIRED)
VMG-FSD-HP (HIGH PRESSURE ≥ 4,000 PSI, CONTACT IS REQUIRED)
VMG-MPD (FOR LOW OR HIGH PRESSURE, NO CONTACT REQUIRED)

WOC CONNECTORS

Note: WOC stands for "without cable." The connectors are supplied as shown below for installation in the field and/or to non-neoprene jacketed cables. Bonding can be achieved by molding to the connectors shown using polyurethane with appropriate primers.

Part Names: **VMG-FS WOC, VMG-MP WOC**
Material: Special Neoprene, Molded
Contacts: Copper Alloy, Hard Gold Plated per MIL-G-45204
Voltage Rating: 600 VDC~contact factory for higher voltage requirements
Pressure Rating, Mated: up to 20,000 psi

NOTE: Torque values referenced in this literature assume installation into dry metal threads. Please contact the factory for recommendations.

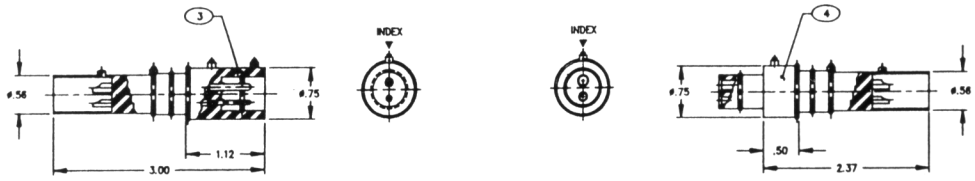



VMG-1-FS-WOC	VMG-2-FS-WOC	VMG-3-FS-WOC	VMG-4-FS-WOC
1 #14 AWG	1 #14 AWG	1 #14 AWG	1 #14 AWG
	1 #16 AWG	2 #16 AWG	3 #16 AWG

VMG-FS AND ASSOCIATED PARTS
MATEABLE BULKHEAD CONNECTORS

BULKHEAD CONNECTORS & MOUNTING REQUIREMENT
(MATES TO VMG FS & VMG-FS-R/A)

Part Name: **VMG-BCL**
Material: 316 Stainless St., Internal Insulation-Special Neoprene
Contacts: Copper Alloy, Hard Gold Plated per MIL-G-45204
Pressure Rating, Mated: up to 20,000 psi

Description: Special insulating neoprene is permanently molded to the metal shell. These types of connectors are used where physical abuse would be too great for the non-metallic (glass reinforced epoxy) series.

Part Name: **VSG-BCL**
Material: Glass Reinforced Epoxy
Contacts: Copper Alloy, Hard Gold Plated per MIL-G-45204
Pressure Rating, Mated: up to 20,000 psi

Description: One of our oldest connectors in the non-metallic series, with female sockets as shown. Connector is one homogeneously molded unit. Available with different thread lengths as indicated.

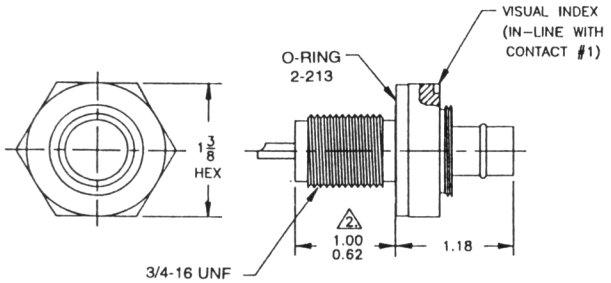

VMG-BCL
VSG-BCL

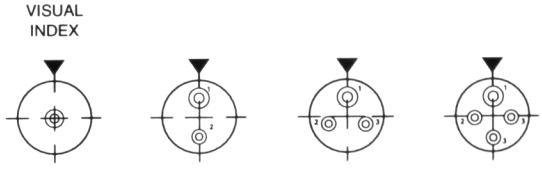

VMG-1-BCL VSG-1-BCL	VMG-2-BCL VSG-2-BCL	VMG-3-BCL VSG-3-BCL	VMG-4-BCL VSG-4-BCL
1 #14	1 #14 1 #16	1 #14 2 #16	1 #14 3 #16

Part Name: **VSG-PBC**
Material: Glass Reinforced Epoxy
Contacts: Copper Alloy, Hard Gold Plated per MIL-G-45204
Pressure Rating, Mated: up to 5,000 psi

Description: VSG format which utilizes a radial seal to reduce mounting dimensions. PBCL accepts locking sleeves.

Note: Pigtails are teflon insulated #18 AWG

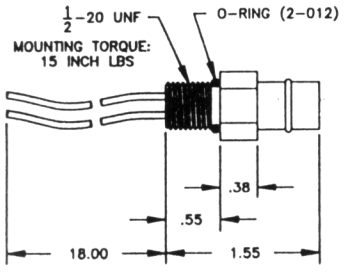

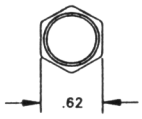

VSG-PBC

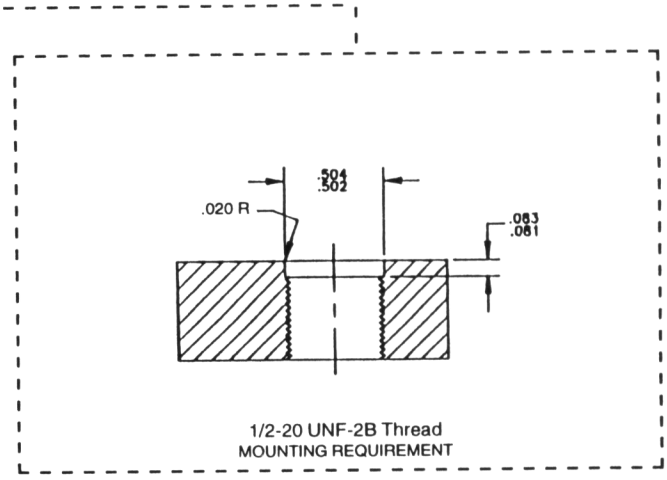



VSG-1-PBC 1 # 10	VSG-2-PBC 1 # 10 1 # 14	VSG-3-PBC 1 # 10 2 # 14	VSG-4-PBC 1 # 14 3 # 16

NOTE: Torque values referenced in this literature assume installation into dry metal threads. Please contact the factory for recommendations.

VMG-FS AND ASSOCIATED PARTS
MATEABLE BULKHEAD CONNECTORS

BULKHEAD CONNECTORS & MOUNTING REQUIREMENT
(MATES TO VMG FS & VMG-FS-R/A)

Part Name: **VSG-PBCL**
Material: Glass Reinforced Epoxy
Contacts: Copper Alloy, Hard Gold Plated per MIL-G-45204
Pressure Rating, Mated: up to 5,000 psi

Note: Pigtails are teflon insulated #18 AWG

Description: Special insulating neoprene is permanently molded to the metal shell. These types of connectors are used where physical abuse would be to great for the non-metallic (glass reinforced epoxy) series.

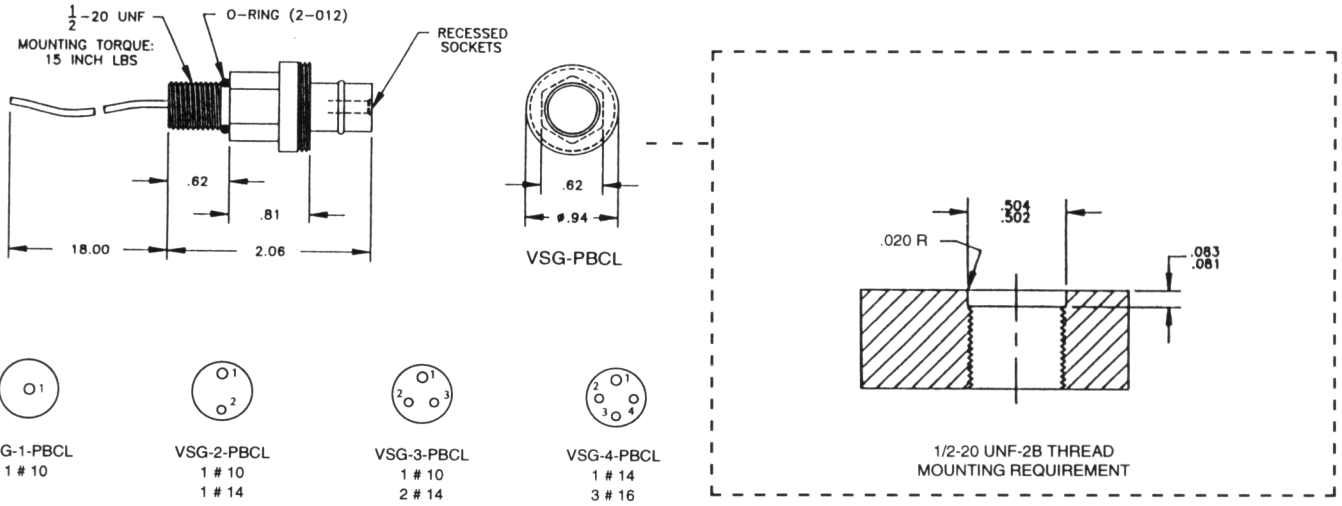

Part Name: **VSG-PBCLM**
Material: Glass Reinforced Epoxy
Contacts: Copper Alloy, Hard Gold Plated per MIL-G-45204
Pressure Rating, Mated: up to 5,000 psi

Note: Pigtails are teflon insulated #18 AWG

Description: Flush mount version does not require counter bore to seal against bulkhead.

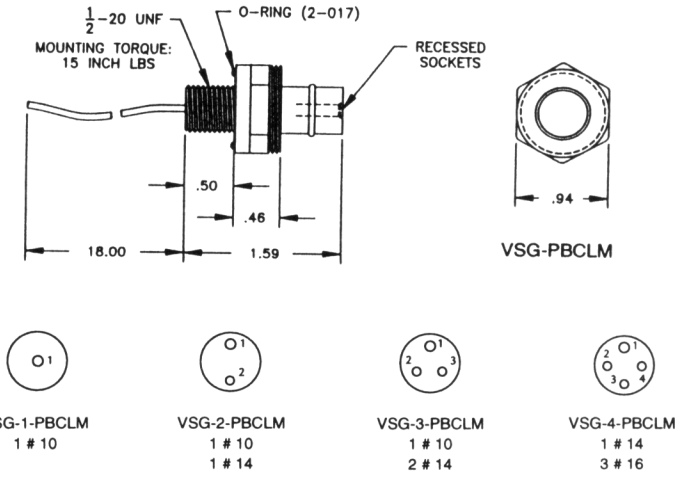

NOTE: Torque values referenced in this literature assume installation into dry metal threads. Please contact the factory for recommendations.

RMK-FS AND ASSOCIATED PARTS
STANDARD RUBBER MOLDED

IN-LINE SERIES

Note: Available with grippers, must specify.

NOTE: Torque values referenced in this literature assume installation into dry metal threads. Please contact the factory for recommendations.

Material: Special Neoprene, Molded
Contacts: Copper Alloy, Hard Gold Plated per MIL-G-45204
Voltage Rating: 600 VDC~contact factory for higher voltage requirements
Pressure Rating, Mated: up to 20,000 psi

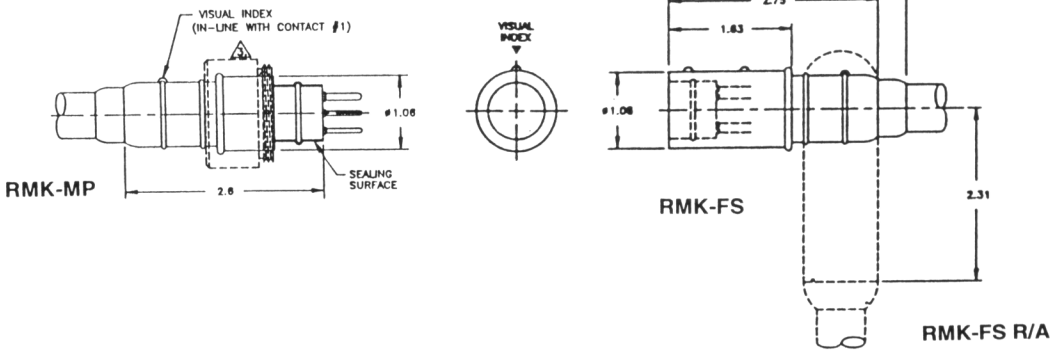

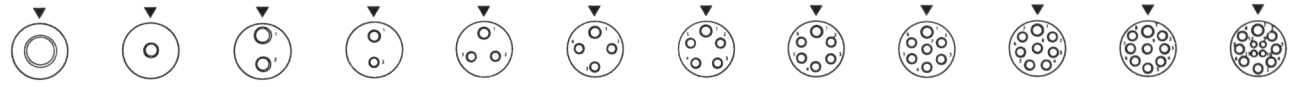

RMK-1/0-FS	RMK-1-FS	RMK-6/8-FS	RMK-2-FS	RMK-3-FS	RMK-4-FS	RMK-5-FS	RMK-6-FS	RMK-7-FS	RMK-8-FS	RMK-9-FS	RMK-12-FS
1 #1/0	1 #8	1 #6	1 #10	1 #10	1 #10	1 #10	1 #14	1 #14	1 #14	1 #14	1 #14
(Cable: 1/0 Welding)	(Cable: 8/1SO)	1 #8	1 #14	2 #14	3 #14	4 #14	5 #16	6 #16	7 #16	8 #16	11 #16
		(Cable: 8/2SO)	(Cable: 18/2SO)	(Cable: 18/3SO)	(Cable: 18/4SO)	(Cable: 18/5SO)	(Cable: 18/6SO)	(Cable: 18/7SO)	(Cable: 18/8SO)	(Cable: 18/10SO)	(Cable: 18/12SO)

LOCKING SLEEVES

Note: K-FLS-X is recommended when mating RMK-FS to a bulkhead connector. Must specify cable OD.

K-MLS-D (AVAILABLE FOR RMK-MP)
K-FLS-D (AVAILABLE FOR RMK-FS, RMK-FS-R/A, WOC)

DUMMY CONNECTORS

Note: specify number of conductors when ordering

RMK-FSD MATES TO RMK-MP
RMK-MPD MATES TO RMK-FS & RMK-FS-R/A

Material: Special Neoprene, Molded
Pressure Rating, Mated:
RMK-FSD (FOR HIGH OR LOW PRESSURE, NO CONTACT REQUIRED)
RMK-MPD-LP (LOW PRESSURE ≤ 4,000 PSI, NO CONTACT REQUIRED)
RMK-MPD-HP (HIGH PRESSURE ≥ 4,000 PSI CONTACT IS REQUIRED)

WOC CONNECTORS

Note: WOC stands for "without cable." The connectors are supplied as shown below for installation in the field and/or to non-neoprene jacketed cables. Bonding can be achieved by molding to the connectors shown using polyurethane with appropriate primers. Inexpensive plastic syringes can be used as molds.

Part Names: **RMK-FS WOC, RMK-MP WOC**
Material: Special Neoprene, Molded
Contacts: Brass, Hard Gold Plated per MIL-G-45204
Voltage Rating: 600 VDC~contact factory for higher voltage requirements
Pressure Rating, Mated: up to 20,000 psi

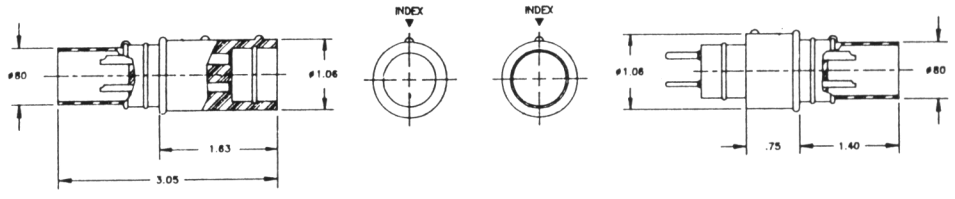

RMK-FS AND ASSOCIATED PARTS
MATEABLE BULKHEAD CONNECTORS

BULKHEAD CONNECTORS
(MATES TO RMK-FS & RMK-FS-R/A)

NOTE: Torque values referenced in this literature assume installation into dry metal threads. Please contact the factory for recommendations.

Part Name: **RMK-BCL**
Material: 316 Stainless St.; Internal Insulation: Special Neoprene
Contacts: Copper Alloy, Hard Gold Plated per MIL-G-45204
Pressure rating, Mated: up to 20,000 psi

Description: Special insulating neoprene is permanently molded to the metal body. These types of connectors are used where physical abuse would be too great for our glass reinforced (GRE) epoxy series.

Part Name: **XSK-BCL**
Material: Glass Reinforced Epoxy
Contacts: Copper Alloy, Hard Gold Plated per MIL-G-45204
Pressure Rating, Mated: up to 20,000 psi

Description: A non-metallic connector homogeneously molded of glass reinforced epoxy (GRE). One of the oldest and most reliable connectors in our product line. For the same connector body, but with female sockets refer to the VSK (page 50-31).

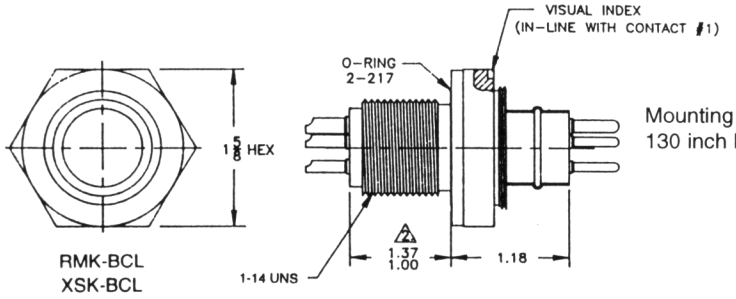

RMK-BCL
XSK-BCL

Mounting Torque
130 inch lbs.

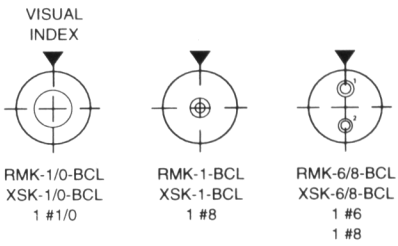

RMK-1/0-BCL
XSK-1/0-BCL
1 #1/0

RMK-1-BCL
XSK-1-BCL
1 #8

RMK-6/8-BCL
XSK-6/8-BCL
1 #6
1 #8



RMK-2-BCL
XSK-2-BCL
1 #10
1 #14

RMK-3-BCL
XSK-3-BCL
1 #10
2 #14

RMK-4-BCL
XSK-4-BCL
1 #10
3 #14

RMK-5-BCL
XSK-5-BCL
1 #10
4 #14

RMK-6-BCL
XSK-6-BCL
1 #14
5 #16

RMK-7-BCL
XSK-7-BCL
1 #14
6 #16

RMK-8-BCL
XSK-8-BCL
1 #14
7 #16

RMK-9-BCL
XSK-9-BCL
1 #14
8 #16

RMK-12-BCL
XSK-12-BCL
1 #14
11 #16

Part Name: **XSK-DEBCL**
Material: Glass Reinforced Epoxy
Contacts: Copper Alloy, Hard Gold Plated per MIL-G-45204
Pressure Rating, Mated: up to 20,000 psi from front side.

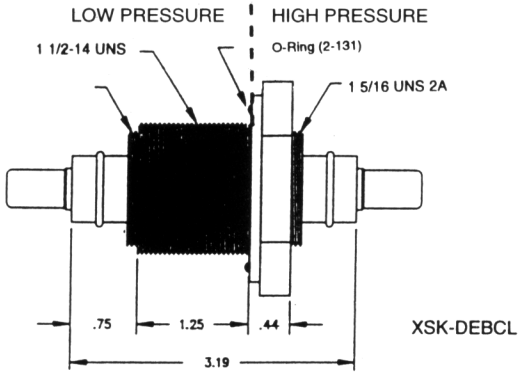

XSK-DEBCL

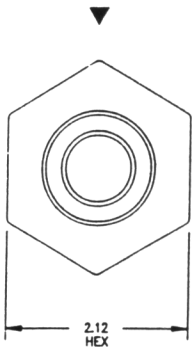

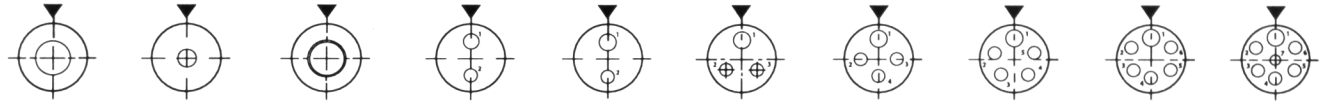

XSK-1/0-DEBCL
1 #1/0

XSK-1-DEBCL
1 #8

XSK-2/0-DEBCL
1 #2/0

XSK-6/8-DEBCL
1 #6
1 #8

XSK-2-DEBCL
1 #10
1 #14

XSK-3-DEBCL
1 #10
2 #14

XSK-4-DEBCL
1 #10
3 #14

XSK-5-DEBCL
1 #10
4 #14

XSK-6-DEBCL
1 #14
5 #16

XSK-7-DEBCL
1 #14
6 #16

VMK-FS AND ASSOCIATED PARTS
REVERSED RUBBER MOLDED

IN-LINE SERIES

Material: Special Neoprene, Molded
Contacts: Copper Alloy, Hard Gold Plated per MIL-G-45204
Voltage Rating: 600 VDC~contact factory for higher voltage requirements
Pressure Rating, Mated: up to 20,000 psi

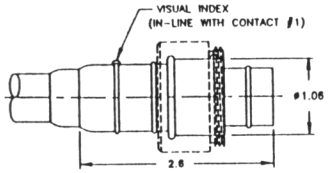

VMK-MP

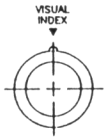

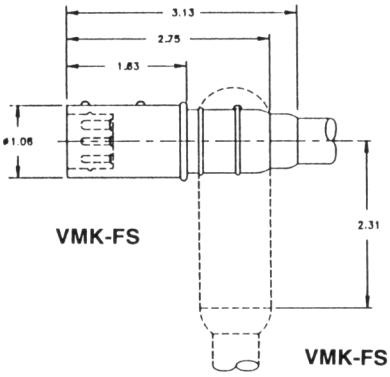

VMK-FS

VMK-FS R/A

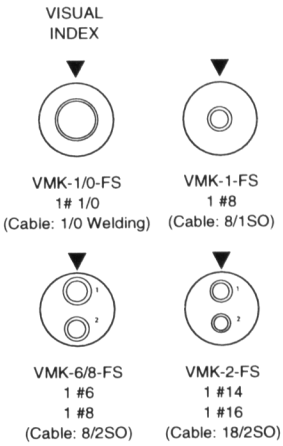

VMK-1/0-FS
1# 1/0
(Cable: 1/0 Welding)

VMK-1-FS
1 #8
(Cable: 8/1SO)

VMK-6/8-FS
1 #6
1 #8
(Cable: 8/2SO)

VMK-2-FS
1 #14
1 #16
(Cable: 18/2SO)

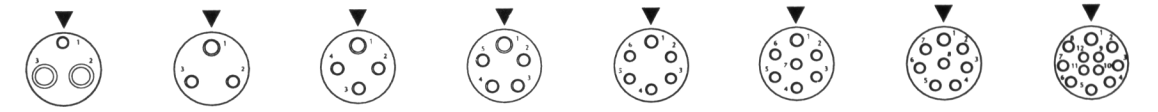

VMK-3S-FS
1 #14
2 #8
(Cable: 10/3SO)

VMK-3-FS
1 #14
2 #16
(Cable: 18/3SO)

VMK-4-FS
1 #14
3 #16
(Cable: 18/4SO)

VMK-5-FS
1 #14
4 #16
(Cable: 18/5SO)

VMK-6-FS
1 #14
5 #16
(Cable: 18/6SO)

VMK-7-FS
1 #14
6 #16
(Cable: 18/7SO)

VMK-8-FS
1 #14
7 #16
(Cable:18/8SO)

VMK-12-FS
1 #14
11 #16
(Cable: 18/12SO)

LOCKING SLEEVES

Notes: K-FLS-X is recommended when mating VMK-FS to a bulkhead connector. Must specify cable OD.

K-MLS-D (AVAILABLE FOR VMK-MP)
K-FLS-D (AVAILABLE FOR VMK-FS, VMK-FS-R/A, WOC)

DUMMY CONNECTORS

Notes: Specify number of conductors when ordering

VMK-FSD MATES TO VMK-MP
VMK-MPD MATES TO VMK-FS & VMK-FS R/A

Material: Special Neoprene, Molded
Pressure Rating, Mated:
VMK-FSD-LP (LOW PRESSURE ≤ 4,000 PSI, NO CONTACT REQUIRED)
VMK-FSD-HP (HIGH PRESSURE ≥ 4,000 PSI, CONTACT IS REQUIRED)
VMK-MPD (FOR LOW OR HIGH PRESSURE, NO CONTACT REQUIRED)

WOC CONNECTORS

Note: WOC stands for "without cable." The connectors are supplied as shown below for installation in the field and/or to non-neoprene jacketed cables. Bonding can be achieved by molding to the connectors shown using polyurethane with appropriate primers.

Part Names: **VMK-FS WOC, VMK-MP WOC**
Material: Special Neoprene, Molded
Contacts: Brass, Hard Gold Plated per MIL-G-45204
Voltage Rating: 600 VDC~contact factory for higher voltage requirements
Pressure Rating, Mated: up to 20,000 psi

NOTE: Torque values referenced in this literature assume installation into dry metal threads. Please contact the factory for recommendations.

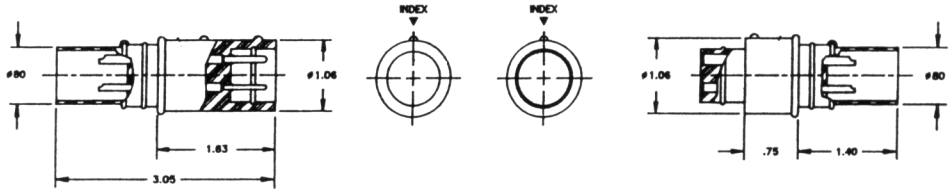

VMK-FS AND ASSOCIATED PARTS
MATEABLE BULKHEAD CONNECTORS

BULKHEAD CONNECTORS
(MATES TO VMK-FS & VMK-FS-R/A)

Part Name: **VMK-BCL**
Material: 316 Stainless St.; Internal Insulation: Special Neoprene
Contacts: Copper Alloy, Hard Gold Plated per MIL-G-45204
Pressure Rating, Mated: up to 20,000 psi

Description: Special insulating neoprene is permanently molded to the metal body. These types of connectors are used where physical abuse would be too great for our glass reinforced epoxy (GRE) line.

Part Name: **VSK-BCL**
Material: Glass Reinforced Epoxy
Contacts: Copper Alloy, Hard Gold Plated per MIL-G-45204
Pressure Rating, Mated: up to 20,000 psi

Description: Features female sockets, recessed, a large rugged body of non-metallic molded material. Same body as the XSK (page 50-29), but has female contacts.

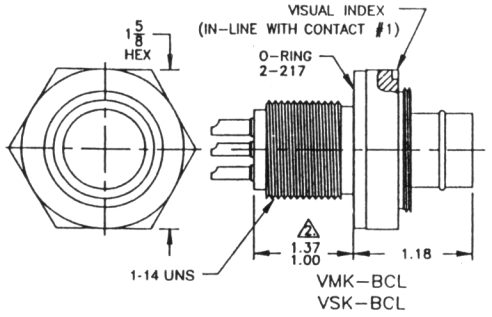

Mounting Torque
130 inch lbs.

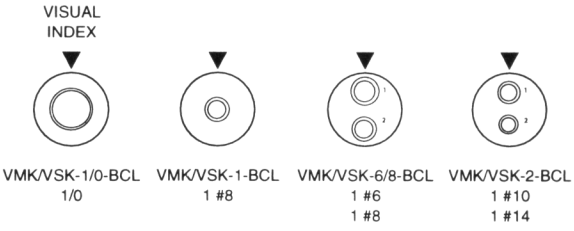

VMK/VSK-1/0-BCL
1/0

VMK/VSK-1-BCL
1 #8

VMK/VSK-6/8-BCL
1 #6
1 #8

VMK/VSK-2-BCL
1 #10
1 #14

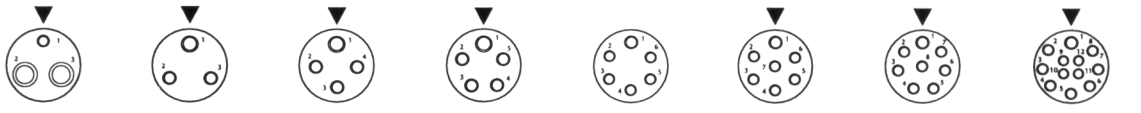

VMK/VSK-3S-BCL
1 #14
2 #8

VMK/VSK-3-BCL
1 #14
2 #16

VMK/VSK-4-BCL
1 #14
3 #16

VMK/VSK-5-BCL
1 #14
4 #16

VMK/VSK-6-BCL
1 #14
5 #16

VMK/VSK-7-BCL
1 #14
6 #16

VMK/VSK-8-BCL
1 #14
7 #16

VMK/VSK-12-BCL
1 #14
11 #16

NOTE: Torque values referenced in this literature assume installation into dry metal threads. Please contact the factory for recommendations.

MINIATURE RUBBER MOLDED AND ASSOCIATED PARTS
STANDARD RUBBER MOLDED

IN-LINE SERIES

Material: Special Neoprene, Molded
Contacts: Copper Alloy, Hard Gold Plated per MIL-G-45204
Voltage Rating: 600 VDC~contact factory for higher voltage requirements
Pressure Rating, Mated: up to 20,000 psi

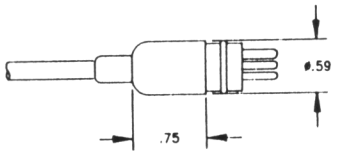

MINI-RM-7-MP



1 # 20
6 # 22

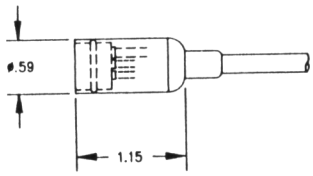

MINI-RM-7-FS

NOTE: Torque values referenced in this literature assume installation into dry metal threads. Please contact the factory for recommendations.

MINIATURE RUBBER MOLDED AND ASSOCIATED PARTS
REVERSED RUBBER MOLDED

IN-LINE SERIES

Material: Special Neoprene, Molded
Contacts: Copper Alloy, Hard Gold Plated per MIL-G-45204
Voltage Rating: 600 VDC~contact factory for higher voltage requirements
Pressure Rating, Mated: up to 20,000 psi

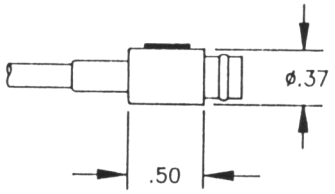

MINI-VM-4 -MP



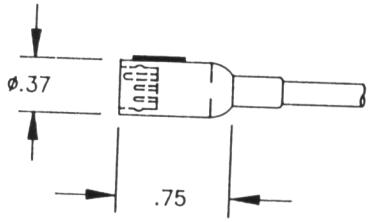

MINI-VM-4-FS

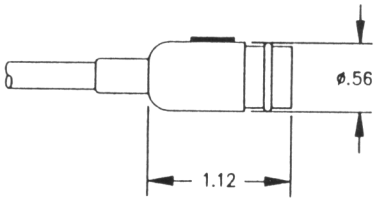

MINI-VM-11-MP

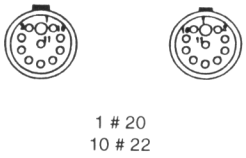

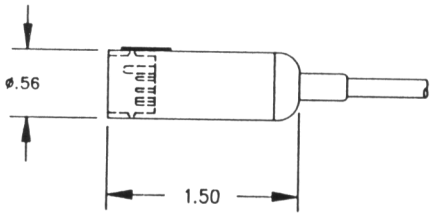

MINI-VM-11-FS

NOTE: Torque values referenced in this literature assume installation into dry metal threads. Please contact the factory for recommendations.

SPECIAL ASSEMBLIES
CABLE MOLDS AND CABLE SPLICES

SPECIAL ASSEMBLIES

Material: Neoprene Molding per B/A X-5727 or Polyurethane; black per MIL-M-24041

Note: Length and geometric shape may vary depending on cable diameter.

WYE MOLDS

AVAILABLE MOLDS	A	B	C
Y-30	2 3/4 Inches	1 5/8 Inches	5/8 Inches
Y-40	4 7/8 Inches	3 1/2 Inches	1 Inches
Y-50	6 3/4 Inches	4 Inches	1 1/2 Inches
Y-70	9 1/2 Inches	5 1/2 Inches	2 Inches

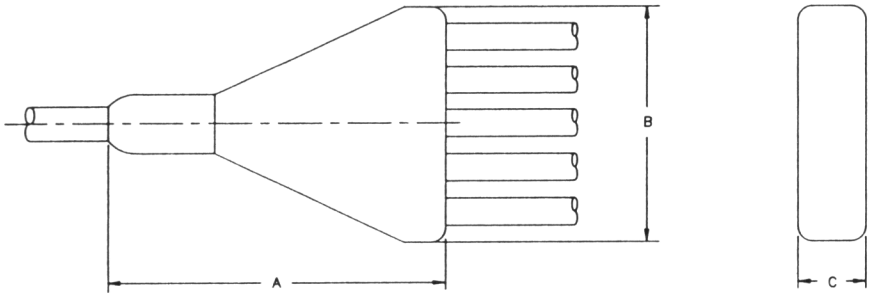

BARREL MOLDS

AVAILABLE MOLDS	D	D E
B-30	2 Inches	1 1/4 Inches
B-40	4 Inches	1 3/4 Inches
B-50	6 1/2 Inches	2 3/4 Inches
B-70	8 1/2 Inches	3 1/2 Inches

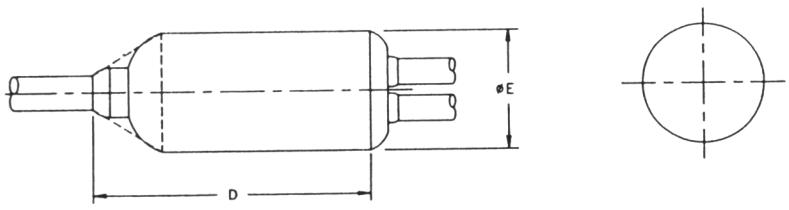

NOTE: Torque values referenced in this literature assume installation into dry metal threads. Please contact the factory for recommendations.

LOCKING SLEEVES

PART NUMBERING

A - **FLS** - **D**

SIZE

(F)EMALE OR (M)ALE LOCKING SLEEVE

MATERIAL

(D)ELRIN, BLACK - STANDARD
(S)TAINLESS STEEL
(B)RONZE; CA 630
(X) LONG
(TI)TANIUM

SEA CON®'s range of locking sleeves are available in Black Delrin, standard (previously standard: plastic). All locking sleeves are also available in Stainless Steel 316, Bronze CA 630, and Titanium; these must be specified by the customer.

USES: Assists in avoiding accidental connector disconnection. The long locking sleeves are used additionally for the purpose of preventing flexing stress from being applied to the electrical conductor terminations when the cable is flexed.

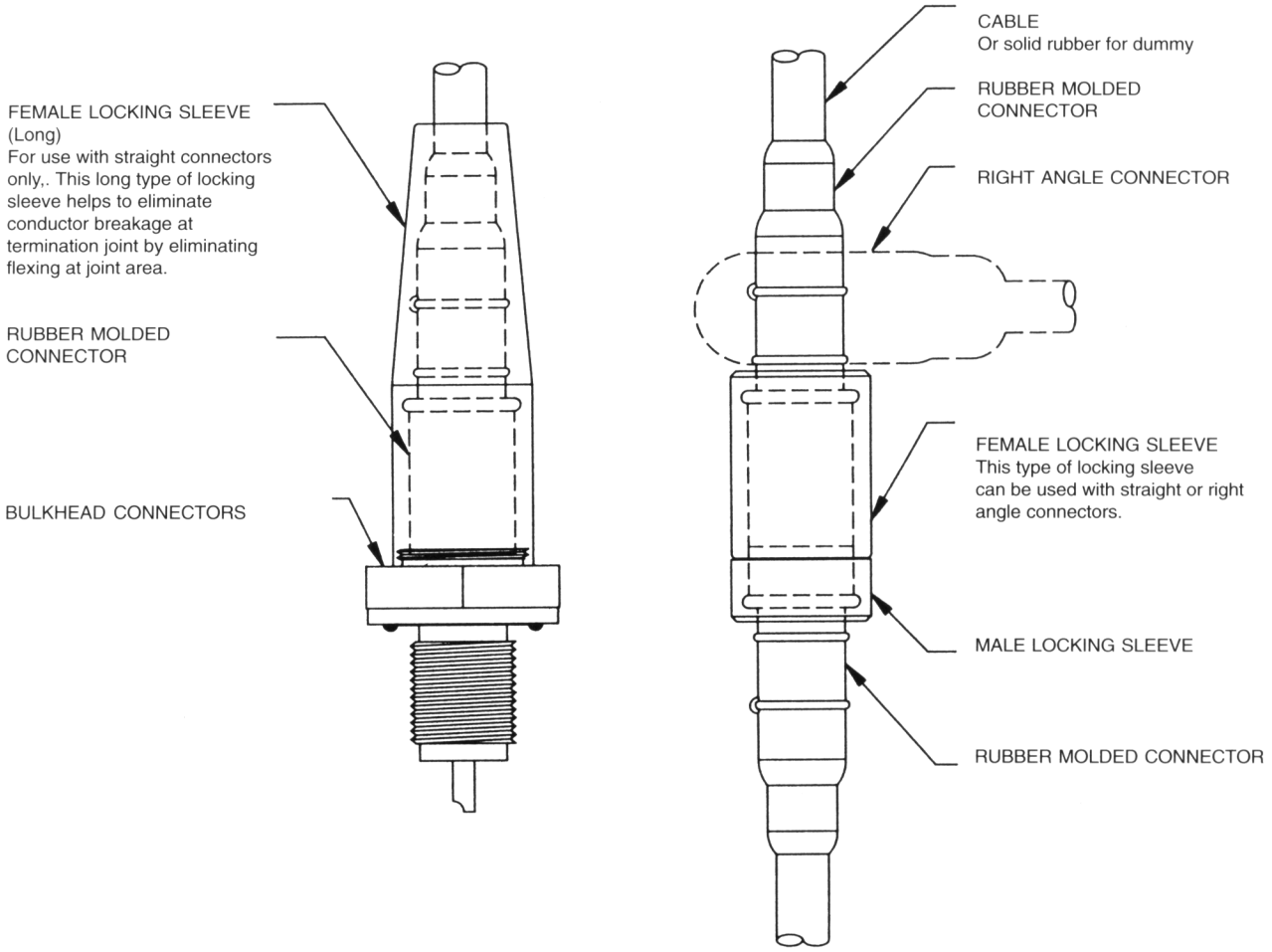

NOTES: Cable diameter must be specified when ordering (long -X) Locking Sleeves.
X Size only uses 1/2 inch cable or smaller.
Torque values referenced in this literature assume installation into dry metal threads. Please contact the factory for recommendations.

SEA CON® AC

LOCKING SLEEVES

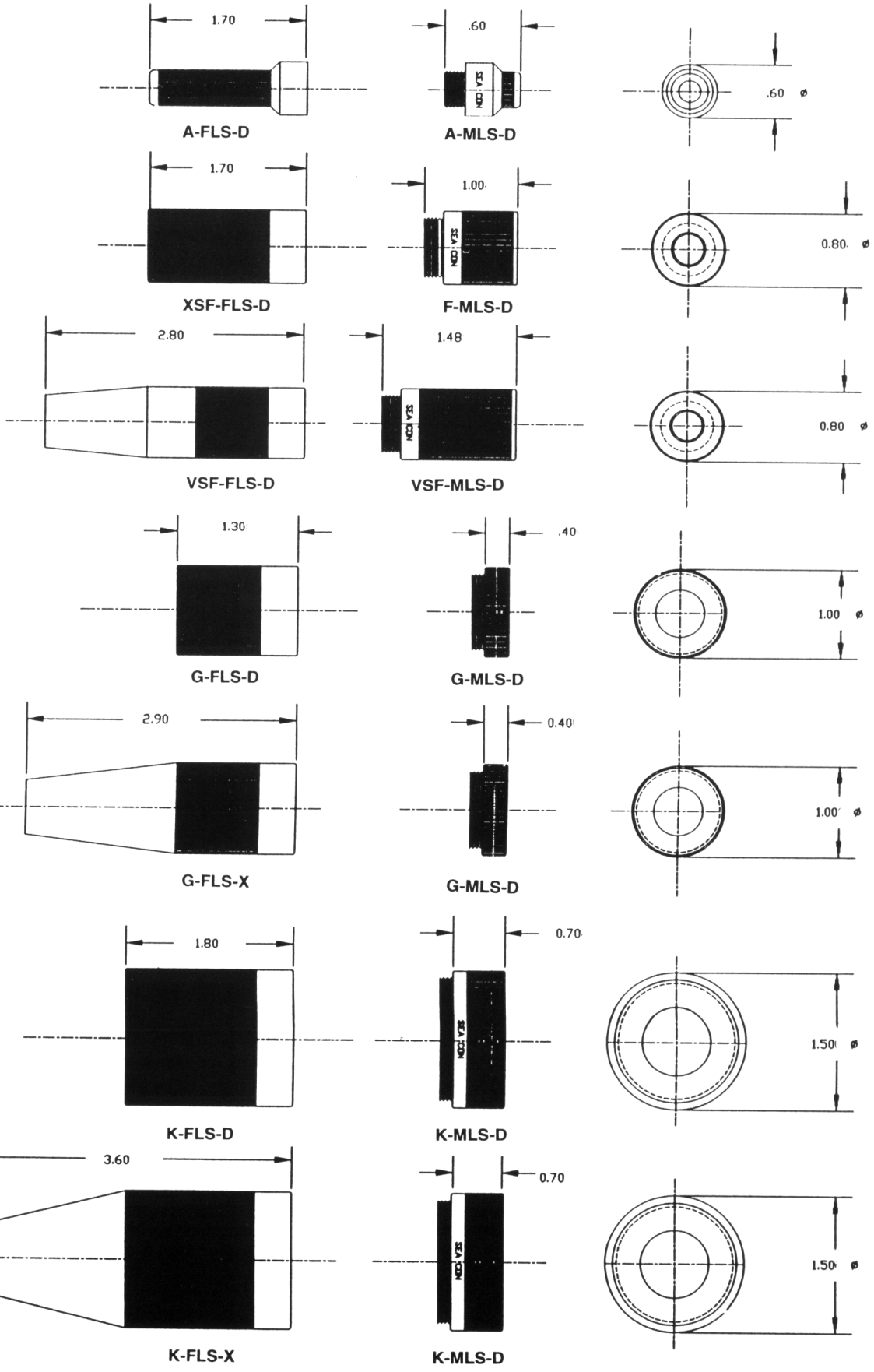

NOTES: VSF-FLS-D, G-FLS-X, K-FLS-X length will vary, depending on cable diameter.
Torque values referenced in this literature assume installation into
dry metal threads. Please contact the factory for recommendations.

RUBBER MOLDED
QUICK REFERENCE MATING TABLE

FEMALE SOCKET IN-LINE	MATEABLE MALE PLUG INLINE	MATEABLE METAL SHELL BULKHEAD	MATEABLE GLASS REINFORCED EPOXY BULKHEAD
RMA-FS RMA-FS R/A	RMA-MP	RMA-BCL	XSA-BC, XSA-BCL XSB-BCL XSC-BC, XSC-BCL
VMA-FS VMA-FS R/A	VMA-MP	VMA-BCL	VSA-BC, VSA-BCL VSB-BCL VSC-BC, VSC-BCL
RMF-FS RMF-FS R/A	RMF-MP	Not Available At This Printing	XSF-BC, XSF-BCL XSFDE-BCL (Formerly XSDE-BCL)
VMF-FS VMF-FS R/A	VMF-MP	VMF-BCL	VSF-BCL
LMG-FS LMG-FS R/A	LMG-MP	Not Available This Printing	LSG-BC, LSG-BCL LSG-BC HP LSK-BC SC
RMG-FS RMG-FS R/A	RMG-MP	RMG-BCL RMGS-BC RMGS-BCL	XSG-BCL, XSG-BCL-P- R/A XSG-PBC, XSG-PBCL, XSG-PBCLM
VMG-FS VMG-FS R/A	VMG-MP	VMG-BCL	VSG-BCL VSG-PBC, VSG-PBCL, VSG-PBCLM
RMK-FS RMK-FS R/A	RMK-MP	RMK-BCL	XSK-BCL XSKDE-BCL
VMK-FS VMK-FS R/A	VMK-MP	VMK-BCL	VSK-BCL
MINI-RM-7-FS	MINI-RM-7-MP	Not Available At This Printing	Not Available At This Printing
MINI-VM-4-FS	MINI-VM-4-MP	Not Available At This Printing	Not Available At This Printing
MINI-VM-11-FS	MINI-VM-11-MP	Not Available At This Printing	Not Available At This Printing

NOTE: Torque values referenced in this literature assume installation into dry metal threads. Please contact the factory for recommendations.

THE U-MATE RANGE (UNDERWATER MATEABLE)

Manufactured at our facility in Great Yarmouth, this new range of connectors has many advantages over competing connectors including gold plating on electrical contacts to avoid corrosion, positive keying via the connector shell to avoid mismating and heavy duty ACME coupling threads.

These connectors are manufactured from 316 stainless steel, although other alternatives are available including Titanium, DGS 1043 and Inconel™.

For further information please contact SEA CON® / EUROPE
(formerly Sea Connections Systems Ltd.).

U-MATE

- Underwater Mateable
- Manufactured in the UK
- Positive keying on metal shell
- Proven sealing technology
- Heavy duty ACME thread
- Gold plated contacts to MIL-G-45204
- Optional Materials
  316 Stainless Steel
  Titanium
  DGS 1043
  Inconel™

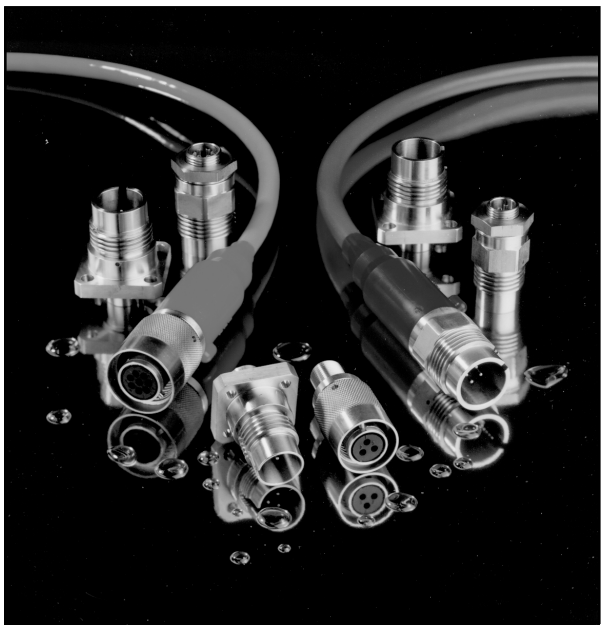

"U-MATE" - METAL SHELL UNDERWATER MATEABLE ELECTRICAL CONNECTOR SERIES

DWG. NO. | SH | REV.

SPECIFICATIONS:

PRESSURE: 10,000 PSI MATED (2,500 PSI Open Face)
TEMPERATURE: -30°C TO +70°C (-22°F TO +158°F)
VOLTAGE: 600 VDC
O-RING: BUNA N 70 DURO
CONTACT: COPPER ALLOY & GOLD PLATED PER MIL-G-45204
ENGAGING NUT: COPPER ALLOY DGS1043
BCR/CCR, FCR, & CCP BODY: 316 STAINLESS STEEL

OPTIONS:

-DSP FOR DUMMY SEALING PLUG (SEALS RECEPTACLE)
-DSR FOR DUMMY SEALING RECEPTACLE (SEALS PLUG)
-STAINLESS STEEL NUT & WASHER SET FOR BULKHEAD CONNECTOR INSTALLATION
-OPEN FACE PRESSURE RESISTANCE ON EITHER PLUG OR RECEPTACLE.
-MOULDING ONTO CABLE
-ALUMINIUM OR DGS 1043 SHELLS

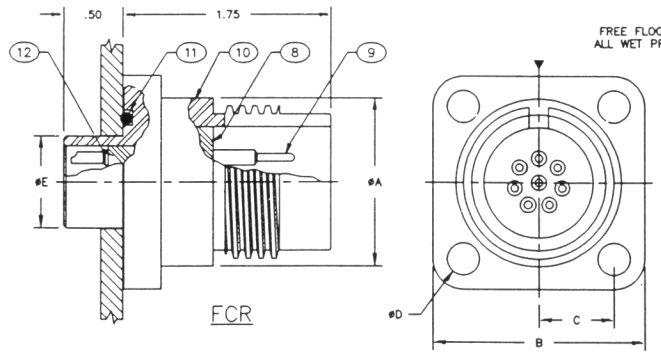

FCR

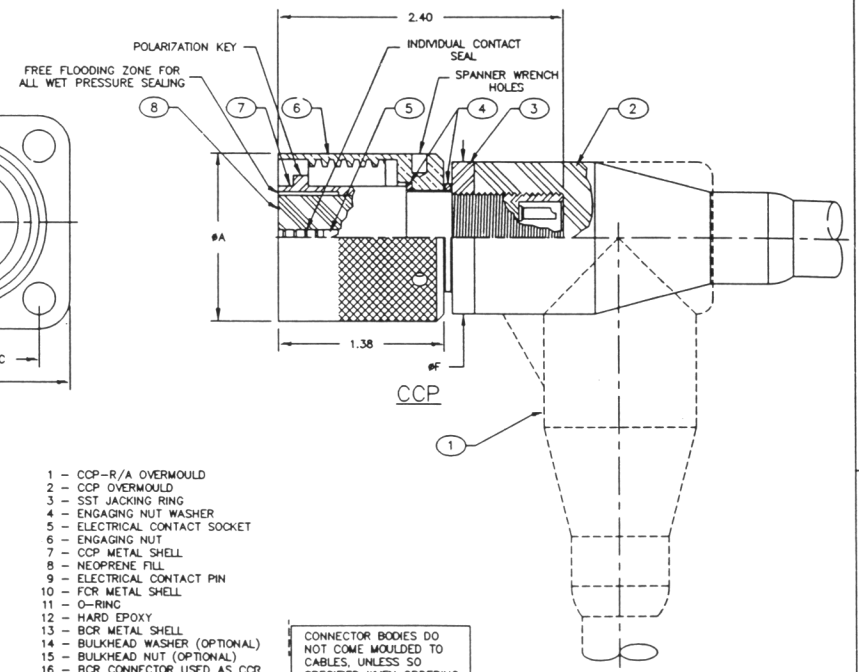

CCP

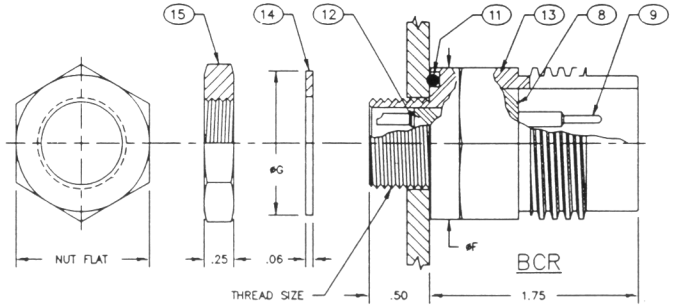

BCR

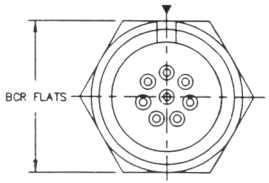

1 - CCP-R/A OVERMOULD
2 - CCP OVERMOULD
3 - SST JACKING RING
4 - ENGAGING NUT WASHER
5 - ELECTRICAL CONTACT SOCKET
6 - ENGAGING NUT
7 - CCP METAL SHELL
8 - NEOPRENE FILL
9 - ELECTRICAL CONTACT PIN
10 - FCR METAL SHELL
11 - O-RING
12 - HARD EPOXY
13 - BCR METAL SHELL
14 - BULKHEAD WASHER (OPTIONAL)
15 - BULKHEAD NUT (OPTIONAL)
16 - BCR CONNECTOR USED AS CCR
17 - CCR OVERMOULD

CONNECTOR BODIES DO NOT COME MOULDED TO CABLES, UNLESS SO SPECIFIED WHEN ORDERING

SHELL SIZE	THD SIZE	øA	B	C	øD	øE	øF	øG	BCR FLAT	NUT FLAT	O-RING
G	5/8-18 UNF-2A	1.12	1.50	.500	.203	.625	1.000	1.06	1.000	1.06	2-115
K	3/4-16 UNF-2A	1.37	1.75	.625	.265	.740	1.250	1.18	1.250	1.12	2-119
L	1-14 UNS-2A	1.62	2.00	.750	.265	.990	1.500	1.50	1.500	1.50	2-123

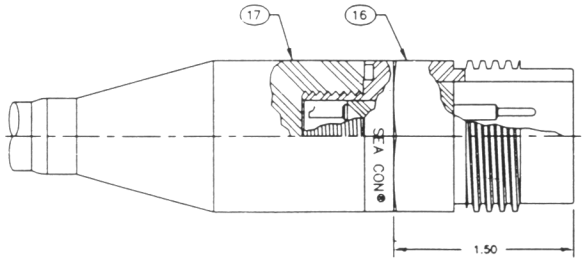

BCR AS CCR

UMG-2-BCR	UMG-3-BCR	UMG-4-BCR	UMK-4-BCR	UMK-6-BCR	UMK-8-BCR	UML-10-BCR	UML-12-BCR
2 ø16 AWG	3 ø16 AWG	4 ø16 AWG	4 ø16 AWG	6 ø16 AWG	8 ø16 AWG	10 ø16 AWG	12 ø16 AWG

DO NOT SCALE DWG

SEA CON®

SEA CON® 55 SERIES

- Manufactured in the United Kingdom
- Industry standard compatibility
- Gold pated contacts
  Socket contacts contain Multilam™ *inserts
- Proven sealing technology
- Heavy duty stub ACME threads **
- Neoprene or Polyurethane cable as standard
- Optional Materials:
  316 Stainless steel
  Titanium
  DGS 1043
  Inconel™

* Multilam™ is a registered trademark of Multi-Contact
** Except shell size 15



SEA CON® 55's
CROSS REFERENCE MATRIX

PART NUMBER EXPLANATION

Typical part number: 5506-2006-0001
This part number is for: A panel mounted receptacle (FCR), 20 shell size, six contact with a one metre tail.

55 = Series
06 = Shell Style:
01 = CCP (cable plug)
02 = CCR (cable receptacle)
06 = FCR (panel mount receptacle)
07 = BCR (bulkhead receptacle)
A1 = CCP / AT (attachable cable plug)
A2 = CCR / AT (attachable cable receptacle)
R1 = CCP / RA (right angled cable plug)
R2 = CCR / RA (right angled cable receptacle)

20 = Shell size: **15, 20, 24 & 32** Shell sizes available.
06 = Number of contacts.
0001 = Denotes length of cable attached. i.e. 0001 = 1 metre, 0002 = 2 metres etc.

SEA CON® 55's SPECIFICATION
STANDARD DATA

Male Contacts:	Gold Plated Brass per MIL-G-45204
Female Contacts:	Gold Plated Brass per MIL-G-45204 with Multilam Contact Sleeves
Connector Shell & Engaging Nut:	316 Stainless Steel Passivated and Electro-Polished (Other materials available include: DGS1043, Titanium and Super Duplex SD40 Stainless Steel)
Connector Molding Material / Overmold Material:	Neoprene Rubber. (Other options available include: Hypalon and Nitrile.)
Cable:	SO Neoprene Cable. Other options available include: Polyurethane and Polyethylene
Bulkhead Tails:	P.T.F.E. Insulated 16 awg Silver Plated Copper Wire.
Working Pressure:	10,000 PSI (23,070 feet, 690 Bar) Mated or Un-Mated
Voltage:	600 VDC / 440 VAC

HANDLING DATA

- Keep all receptacles and plugs free from contamination.
- All Bulkhead Connectors (5506 and 5507) must be mounted in accordance with manufacturers instructions.
- All "O" Ring seals (5506 and 5507) should be coated with a thin film of Silicone Grease prior to mounting.
- A thin film of Silicone Grease should be applied to the plug circumference seal before mating to the receptacle.
- Pressure tight dummy plugs are available.

The following Torque figures are recommended when mounting the Bulkhead Connectors (5507).

Shell Size	Pound - Inches
15	125
20	165
24	225
32	325

SEA CON® 55's SPECIFICATION

Part No.	Contact Size	Conductor Size (Optional)	Current Capacity
1502	3/32	16 AWG (14 AWG)	13A (18A)
1503	3/32	16 AWG (14 AWG)	10A (15A)
1504	1/16	16 AWG	8A
1508	1/16	16 AWG	7A

Part No.	Contact Size	Conductor Size (Optional)	Current Capacity
2003	1/8	16 AWG (14 AWG)	10A (15A)
2004	1/8	16 AWG (14 AWG)	8A (12A)
2006	1/8	16 AWG (14 AWG)	8A (12A)
2008	3/32	16 AWG	7A

Part No.	Contact Size	Conductor Size (Optional)	Current Capacity
2410	2@ 3/32, 8@ 1/8	16 AWG	7A
2412	3/32	16 AWG	7A
2420	1/16	18 AWG (16 AWG)	5A (7A)

Part No.	Contact Size	Conductor Size (Optional)	Current Capacity
3210	5/32	16 AWG	7A
3212	5/32	16 AWG	7A
3216	5@ 1/8, 11@ 3/32	16 AWG	7A
3221	4@ 5/32, 8@1/8, 9@ 3/32	18 AWG (16 AWG)	5A (7A)
3224	6@ 1/8,18@ 3/32	18 AWG (16 AWG)	5A (7A)

Notes:

1. All cables are Neoprene as standard.
2. All Neoprene cables are rated @ 600VDC / 440AC.
3. Polyurethane cables are available as an option (maximum current rating - 10 amps*).

* Depends upon number of conductors.

4. All Polyurethane cables are rated to 600VDC / 440VAC.

SCS PART No.	CAD REF. No.	IF IN DOUBT ASK DO NOT SCALE
----------	C:\DWGS\SCS\1004_2_D.DWG	

THIS DOCUMENT IS PROPRIETARY AND CONFIDENTIAL TO SEA CONNECTIONS SYSTEMS Ltd. ANY INFORMATION CONTAINED HEREON, MAY NOT BE REPRODUCED AND/OR CONVEYED TO ANY THIRD PARTY etc., AND NO ARTICLE MAY BE MANUFACTURED AND/OR ASSEMBLED IN ACCORDANCE WITH THIS DRAWING WITHOUT THE PRIOR WRITTEN CONSENT OF SEA CONNECTIONS SYSTEMS Ltd. "ALL RIGHTS RESERVED" UNDER THE U.K. COPYRIGHT AND DESIGNS AND PATENTS ACT 1988.

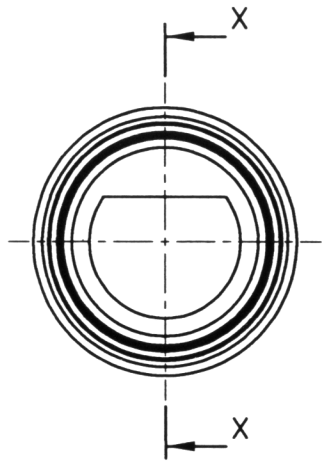

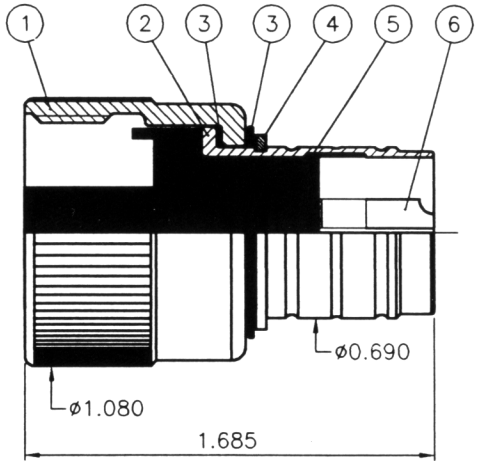

HALF SECTION X–X

Part No.	*Contact Size*	*Conductor Size (Option)*	*Current Capacity*
1502	3/32	16 awg (14 awg)	13A (18A)
1503	3/32	16 awg (14 awg)	10A (15A)
1504	1/16	16 awg	8A
1508	1/16	16 awg	7A

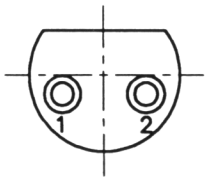

55A1–1502

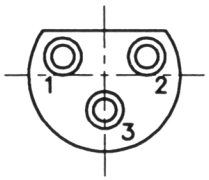

55A1–1503

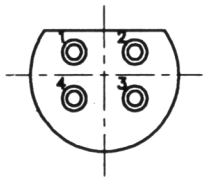

55A1–1504

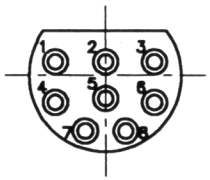

55A1–1508

VIEW ON CONNECTOR FRONT FACE

ITEM No.	QTY.	PART No.	DESCRIPTION	MATERIAL
6	8	55–00–00–1011	#16 SOCKET CONTACT	BRASS
6	4	55–00–00–1011	#16 SOCKET CONTACT	BRASS
6	3	55–00–00–1009	#12 SOCKET CONTACT	BRASS
6	2	55–00–00–1009	#12 SOCKET CONTACT	BRASS
5	--		CONNECTOR BODY	NEOPRENE
4	1	WST–68–PA–S16	SPIRAL RETAINING RING	316 St. St.
3	2	55–00–15–1019	THRUST WASHER	BLACK ACETAL
2	1	55–06–15–1014	PLUG BODY	316L St. St.
1	1	55–00–15–1018	ENGAGING NUT	316L St. St.

SURFACE FINISH	UNLESS OTHERWISE SPECIFIED DIMENSIONS ARE IN INCHES TOLERANCES ARE: DECIMALS / ANGLES	MATERIAL/SPECIFICATION	TITLE
SCALE: 2:1		----------	ATTACHABLE PLUG CONNECTOR GENERAL ARRANGEMENT
SIZE: A3			

DJH			23-9-95	———
DRAWN	CHECKED	APPROVED	DATE	REV. REF. No.
DRAWING No. 55-A1-15-1004			SHEET No. 1 OF 1	REV. No.
SERIES	STYLE	SIZE	NUMBER	

55-7

SCS PART No.	CAD REF. No.	IF IN DOUBT ASK DO NOT SCALE
----------	C:\DWGS\SCS\1006_2_B.DWG	

THIS DOCUMENT IS PROPRIETARY AND CONFIDENTIAL TO SEA CONNECTIONS SYSTEMS Ltd. ANY INFORMATION CONTAINED HEREON, MAY NOT BE REPRODUCED AND/OR CONVEYED TO ANY THIRD PARTY etc., AND NO ARTICLE MAY BE MANUFACTURED AND/OR ASSEMBLED IN ACCORDANCE WITH THIS DRAWING WITHOUT THE PRIOR WRITTEN CONSENT OF SEA CONNECTIONS SYSTEMS Ltd. "ALL RIGHTS RESERVED" UNDER THE U.K. COPYRIGHT AND DESIGNS AND PATENTS ACT 1988.

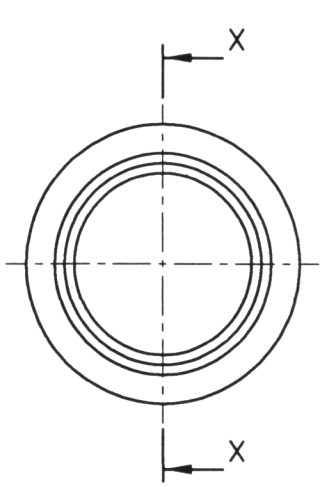

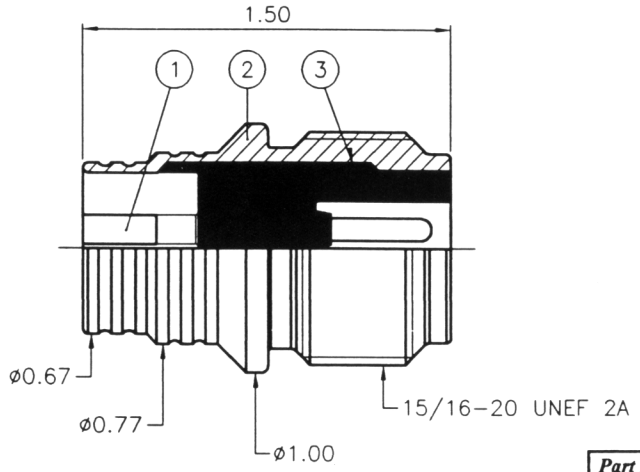

SECTION X–X

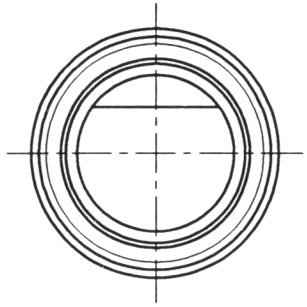

Part No.	Contact Size	Conductor Size (Option)	Current Capacity
1502	3/32	16 awg (14 awg)	13A (18A)
1503	3/32	16 awg (14 awg)	10A (15A)
1504	1/16	16 awg	8A
1508	1/16	16 awg	7A

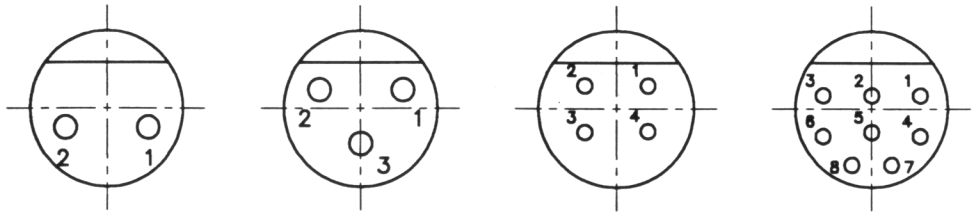

55A2-1502 55A2-1503 55A2-1504 55A2-1508

VIEW ON CONNECTOR FRONT FACE

ITEM No.	QTY.	PART No.	DESCRIPTION	MATERIAL
3	--		CONNECTOR BODY	NEOPRENE
2	1	55-A2-15-1017	RECEPTACLE BODY	316L St. St.
1	8	55-00-00-1013	#16 PIN CONTACT	BRASS
1	4	55-00-00-1013	#16 PIN CONTACT	BRASS
1	3	55-00-00-1012	#12 PIN CONTACT	BRASS
1	2	55-00-00-1012	#12 PIN CONTACT	BRASS

SURFACE FINISH	UNLESS OTHERWISE SPECIFIED DIMENSIONS ARE IN INCHES TOLERANCES ARE: DECIMALS ANGLES	MATERIAL/SPECIFICATION	TITLE
SCALE: 2:1		----------	SIZE 15 ATTACHABLE RECEPTACLE CONNECTOR GENERAL ARRANGEMENT
SIZE: A3			

DJH			25-9-95	———
DRAWN	CHECKED	APPROVED	DATE	REV. REF. No.
DRAWING No. 55-A2-15-1006			SHEET No. 1 OF 1	REV. No.
SERIES	STYLE	SIZE NUMBER		

SEA CON

C

SCS PART No.	CAD REF. No.	IF IN DOUBT ASK DO NOT SCALE
----------	C:\DWGS\SCS\1000_1_D.DWG	

THIS DOCUMENT IS PROPRIETARY AND CONFIDENTIAL TO SEA CONNECTIONS SYSTEMS Ltd. ANY INFORMATION CONTAINED HEREON, MAY NOT BE REPRODUCED AND/OR CONVEYED TO ANY THIRD PARTY etc., AND NO ARTICLE MAY BE MANUFACTURED AND/OR ASSEMBLED IN ACCORDANCE WITH THIS DRAWING WITHOUT THE PRIOR WRITTEN CONSENT OF SEA CONNECTIONS SYSTEMS Ltd. "ALL RIGHTS RESERVED" UNDER THE U.K. COPYRIGHT AND DESIGNS AND PATENTS ACT 1988.

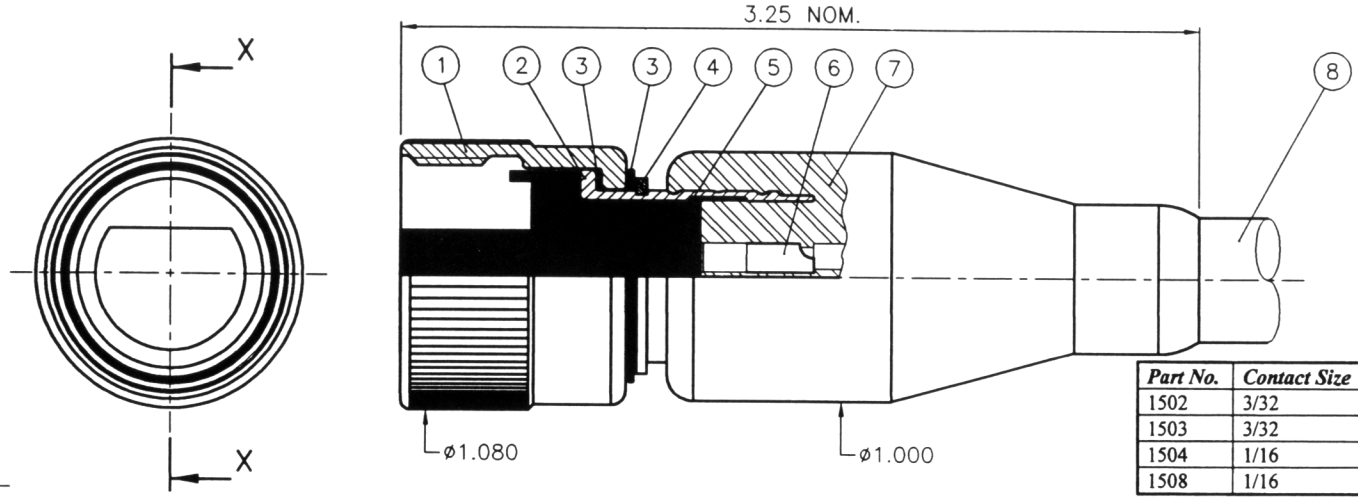

PART SECTION X–X

Part No.	Contact Size	Conductor Size (Option)	Current Capacity
1502	3/32	16 awg (14 awg)	13A (18A)
1503	3/32	16 awg (14 awg)	10A (15A)
1504	1/16	16 awg	8A
1508	1/16	16 awg	7A

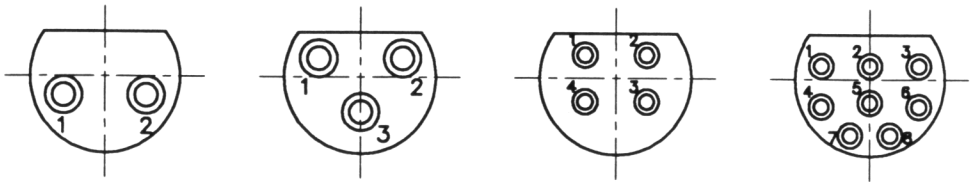

5501–1502 5501–1503 5501–1504 5501–1508

VIEW ON CONNECTOR FRONT FACE

ITEM No.	QTY.	PART No.	DESCRIPTION	MATERIAL
8	1		CABLE	
7	--		TAIL MOULD	NEOPRENE
6	8	55-00-00-1011	#16 SOCKET CONTACT	BRASS
6	4	55-00-00-1011	#16 SOCKET CONTACT	BRASS
6	3	55-00-00-1009	#12 SOCKET CONTACT	BRASS
6	2	55-00-00-1009	#12 SOCKET CONTACT	BRASS
5	--		CONNECTOR BODY	NEOPRENE
4	1	WST-68-PA-S16	SPIRAL RETAINING RING	316 St. St.
3	2	55-00-15-1019	THRUST WASHER	BLACK ACETAL
2	1	55-06-15-1014	PLUG BODY	316L St. St.
1	1	55-00-15-1018	ENGAGING NUT	316L St. St.

SURFACE FINISH	UNLESS OTHERWISE SPECIFIED DIMENSIONS ARE IN INCHES TOLERANCES ARE: DECIMALS / ANGLES	MATERIAL/SPECIFICATION	TITLE
SCALE: 2 : 1		----------	SIZE 15 ATTACHABLE PLUG CONNECTOR MOULDED "STRAIGHT" GENERAL ARRANGEMENT
SIZE: A3			

DJH			24-9-95	
DRAWN	CHECKED	APPROVED	DATE	REV. REF. No.
DRAWING No. 55-01-15-1000			SHEET No. 1 OF 1	REV. No.
SERIES	STYLE	SIZE	NUMBER	

SCS PART No.	CAD REF. No.	IF IN DOUBT ASK
----------	C:\DWGS\SCS\1005_1_D.DWG	DO NOT SCALE

THIS DOCUMENT IS PROPRIETARY AND CONFIDENTIAL TO SEA CONNECTIONS SYSTEMS Ltd. ANY INFORMATION CONTAINED HEREON, MAY NOT BE REPRODUCED AND/OR CONVEYED TO ANY THIRD PARTY etc., AND NO ARTICLE MAY BE MANUFACTURED AND/OR ASSEMBLED IN ACCORDANCE WITH THIS DRAWING WITHOUT THE PRIOR WRITTEN CONSENT OF SEA CONNECTIONS SYSTEMS Ltd. "ALL RIGHTS RESERVED" UNDER THE U.K. COPYRIGHT AND DESIGNS AND PATENTS ACT 1988.

Part No.	*Contact Size*	*Conductor Size (Option)*	*Current Capacity*
1502	3/32	16 awg (14 awg)	13A (18A)
1503	3/32	16 awg (14 awg)	10A (15A)
1504	1/16	16 awg	8A
1508	1/16	16 awg	7A

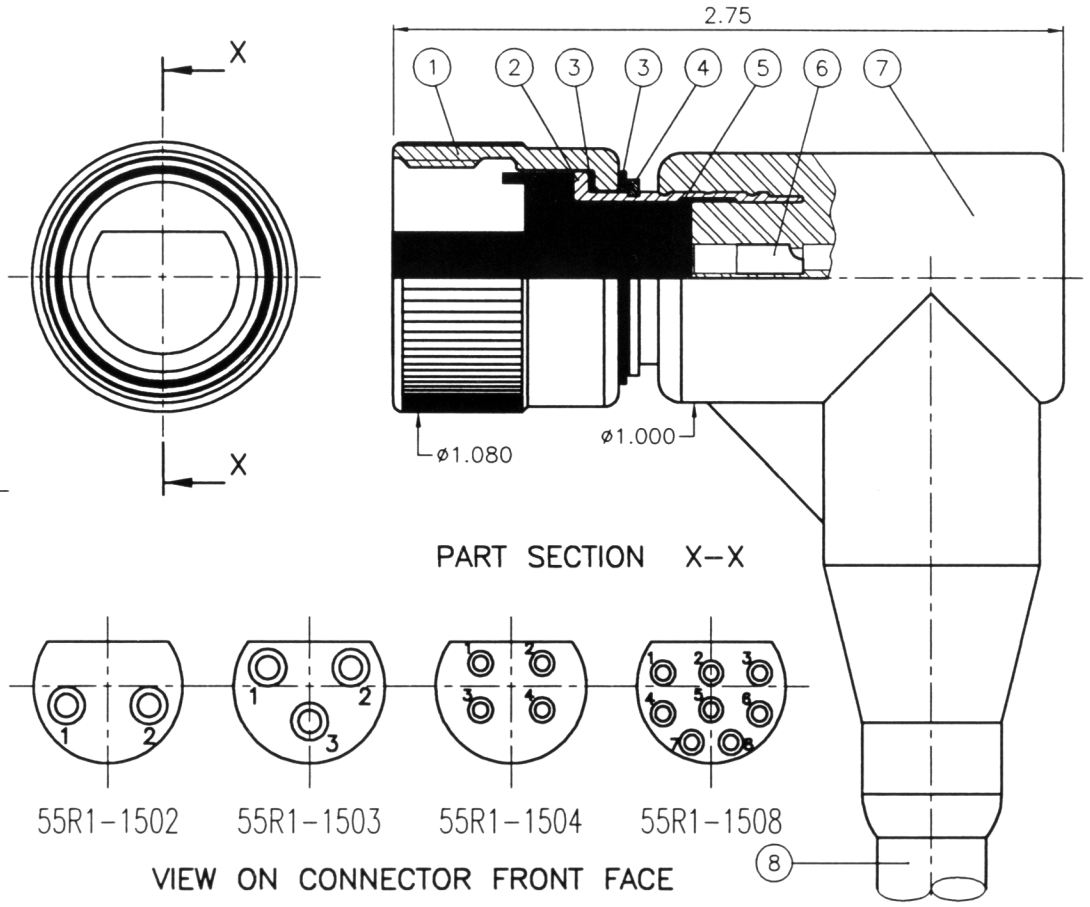

PART SECTION X–X

55R1-1502 55R1-1503 55R1-1504 55R1-1508

VIEW ON CONNECTOR FRONT FACE

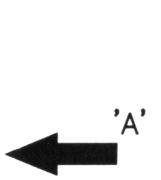



VIEW ON ARROW 'A'

ITEM No.	QTY.	PART No.	DESCRIPTION	MATERIAL
8	1		CABLE	
7	--		TAIL MOULD	NEOPRENE
6	8	55-00-00-1011	#16 SOCKET CONTACT	BRASS
6	4	55-00-00-1011	#16 SOCKET CONTACT	BRASS
6	3	55-00-00-1009	#12 SOCKET CONTACT	BRASS
6	2	55-00-00-1009	#12 SOCKET CONTACT	BRASS
5	--		CONNECTOR BODY	NEOPRENE
4	1	WST-68-PA-S16	SPIRAL RETAINING RING	316 St. St.
3	2	55-00-15-1019	THRUST WASHER	BLACK ACETAL
2	1	55-06-15-1014	PLUG BODY	316L St. St.
1	1	55-00-15-1018	ENGAGING NUT	316L St. St.

SURFACE FINISH	UNLESS OTHERWISE SPECIFIED DIMENSIONS ARE IN INCHES TOLERANCES ARE: DECIMALS ANGLES	MATERIAL/SPECIFICATION	TITLE
SCALE: 2:1		----------	SIZE 15 ATTACHABLE PLUG CONNECTOR MOULDED "RIGHT ANGLE" GENERAL ARRANGEMENT
SIZE: A3			

DJH			24-9-95	
DRAWN	CHECKED	APPROVED	DATE	REV. REF. No.
DRAWING No. 55-R1-15-1005			SHEET No. 1 OF 1	REV. No.
SERIES	STYLE	SIZE	NUMBER	

SEACON®

C

SCS PART No.	CAD REF. No.	IF IN DOUBT ASK DO NOT SCALE
----------	C:\DWGS\SCS\1001_1_B.DWG	

THIS DOCUMENT IS PROPRIETARY AND CONFIDENTIAL TO SEA CONNECTIONS SYSTEMS Ltd. ANY INFORMATION CONTAINED HEREON, MAY NOT BE REPRODUCED AND/OR CONVEYED TO ANY THIRD PARTY etc., AND NO ARTICLE MAY BE MANUFACTURED AND/OR ASSEMBLED IN ACCORDANCE WITH THIS DRAWING WITHOUT THE PRIOR WRITTEN CONSENT OF SEA CONNECTIONS SYSTEMS Ltd. "ALL RIGHTS RESERVED" UNDER THE U.K. COPYRIGHT AND DESIGNS AND PATENTS ACT 1988.

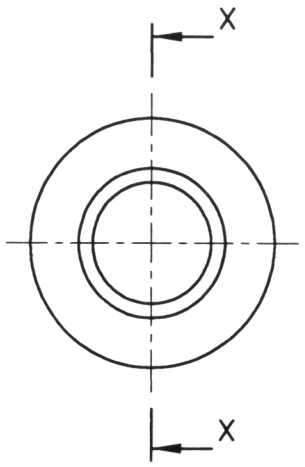

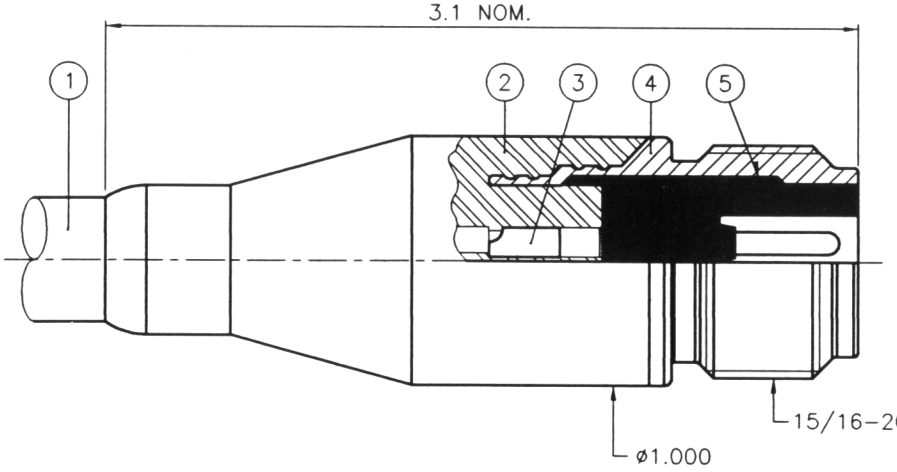

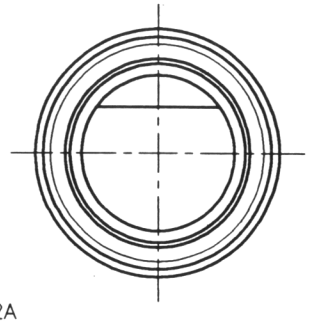

PART SECTION X–X

Part No.	*Contact Size*	*Conductor Size (Option)*	*Current Capacity*
1502	3/32	16 awg (14 awg)	13A (18A)
1503	3/32	16 awg (14 awg)	10A (15A)
1504	1/16	16 awg	8A
1508	1/16	16 awg	7A

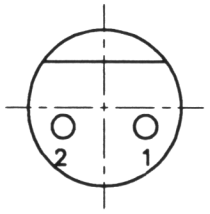

5502–1502

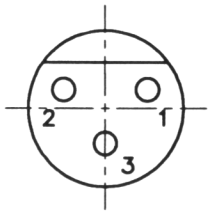

5502–1503

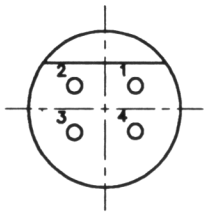

5502–1504

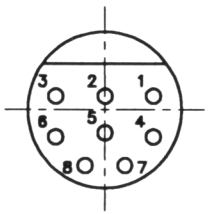

5502–1508

VIEW ON CONNECTOR FRONT FACE

ITEM No.	QTY.	PART No.	DESCRIPTION	MATERIAL
5	--		CONNECTOR BODY	NEOPRENE
4	1	55–A2–15–1017	RECEPTACLE BODY	316L St. St.
3	8	55–00–00–1013	#16 PIN CONTACT	BRASS
3	4	55–00–00–1013	#16 PIN CONTACT	BRASS
3	3	55–00–00–1012	#12 PIN CONTACT	BRASS
3	2	55–00–00–1012	#12 PIN CONTACT	BRASS
2	--		TAIL MOULD	NEOPRENE
1	1		CABLE	

SURFACE FINISH	UNLESS OTHERWISE SPECIFIED DIMENSIONS ARE IN INCHES TOLERANCES ARE: DECIMALS / ANGLES	MATERIAL/SPECIFICATION	TITLE
SCALE: 2 : 1		----------	SIZE 15 ATTACHABLE RECEPTACLE CONNECTOR MOULDED "STRAIGHT" GENERAL ARRANGEMENT
SIZE: A3			

DJH			26-9-95	———
DRAWN	CHECKED	APPROVED	DATE	REV. REF. No.
DRAWING No. 55-02-15-1001			SHEET No. 1 OF 1	REV. No.
SERIES	STYLE	SIZE	NUMBER	

SEACON C

55-11

SCS PART No.	CAD REF. No.	IF IN DOUBT ASK DO NOT SCALE
----------	C:\DWGS\SCS\1007_1_B.DWG	

THIS DOCUMENT IS PROPRIETARY AND CONFIDENTIAL TO SEA CONNECTIONS SYSTEMS Ltd. ANY INFORMATION CONTAINED HEREON, MAY NOT BE REPRODUCED AND/OR CONVEYED TO ANY THIRD PARTY etc., AND NO ARTICLE MAY BE MANUFACTURED AND/OR ASSEMBLED IN ACCORDANCE WITH THIS DRAWING WITHOUT THE PRIOR WRITTEN CONSENT OF SEA CONNECTIONS SYSTEMS Ltd. "ALL RIGHTS RESERVED" UNDER THE U.K. COPYRIGHT AND DESIGNS AND PATENTS ACT 1988.

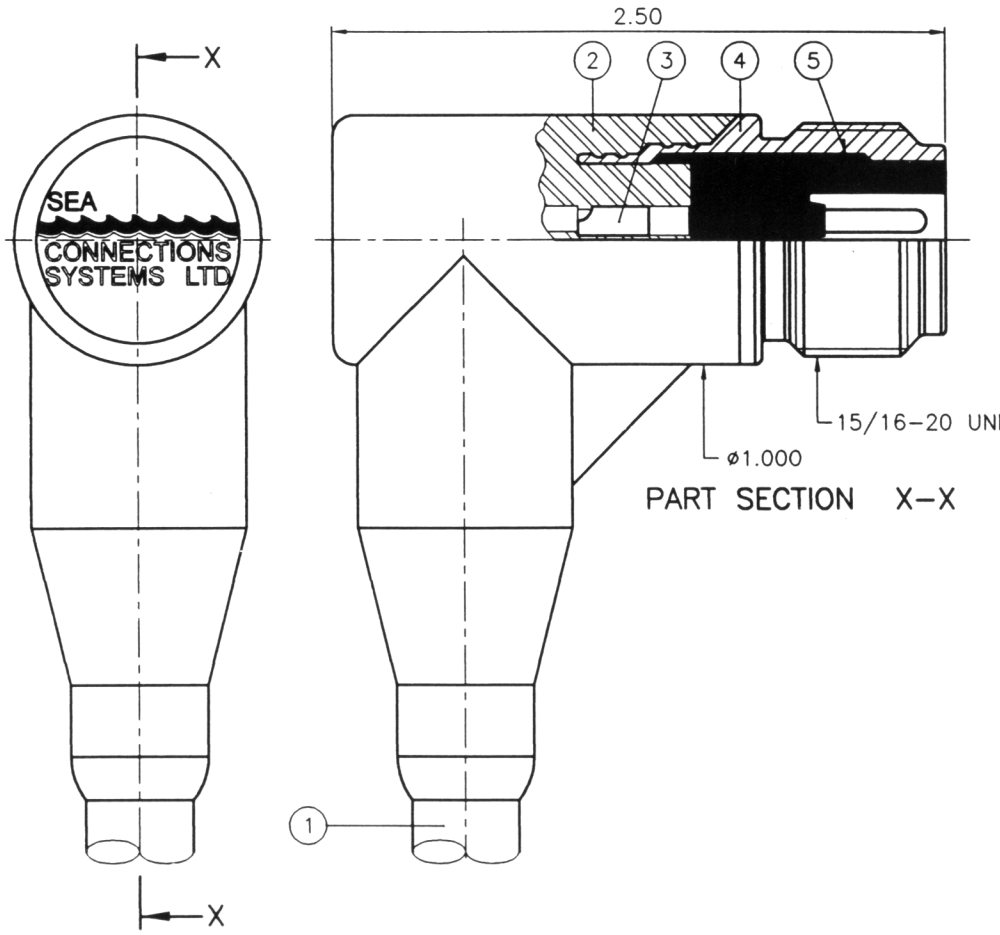

PART SECTION X–X

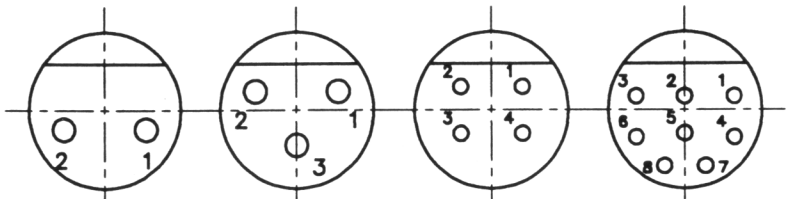

VIEW ON CONNECTOR FRONT FACE

Part No.	*Contact Size*	*Conductor Size (Option)*	*Current Capacity*
1502	3/32	16 awg (14 awg)	13A (18A)
1503	3/32	16 awg (14 awg)	10A (15A)
1504	1/16	16 awg	8A
1508	1/16	16 awg	7A

ITEM No.	QTY.	PART No.	DESCRIPTION	MATERIAL
5	--		CONNECTOR BODY	NEOPRENE
4	1	55-A2-15-1017	RECEPTACLE BODY	316L St. St.
3	8	55-00-00-1013	#16 PIN CONTACT	BRASS
3	4	55-00-00-1013	#16 PIN CONTACT	BRASS
3	3	55-00-00-1012	#12 PIN CONTACT	BRASS
3	2	55-00-00-1012	#12 PIN CONTACT	BRASS
2	--		TAIL MOULD	NEOPRENE
1	1		CABLE	

SURFACE FINISH	UNLESS OTHERWISE SPECIFIED DIMENSIONS ARE IN INCHES TOLERANCES ARE: DECIMALS / ANGLES	MATERIAL/SPECIFICATION	TITLE
SCALE: 2:1 SIZE: A3		----------	SIZE 15 ATTACHABLE RECEPTACLE CONNECTOR MOULDED "RIGHT ANGLE" GENERAL ARRANGEMENT

DRAWN	CHECKED	APPROVED	DATE	REV. REF. No.
DJH			26-9-95	———

DRAWING No.				SHEET No.	REV. No.
55-R2-15-1007				1 OF 1	
SERIES	STYLE	SIZE	NUMBER		

SEACON

55-12

SCS PART No.	CAD REF. No.	IF IN DOUBT ASK DO NOT SCALE
----------	C:\DWGS\SCS\1002_2_C.DWG	

THIS DOCUMENT IS PROPRIETARY AND CONFIDENTIAL TO SEA CONNECTIONS SYSTEMS Ltd. ANY INFORMATION CONTAINED HEREON, MAY NOT BE REPRODUCED AND/OR CONVEYED TO ANY THIRD PARTY etc., AND NO ARTICLE MAY BE MANUFACTURED AND/OR ASSEMBLED IN ACCORDANCE WITH THIS DRAWING WITHOUT THE PRIOR WRITTEN CONSENT OF SEA CONNECTIONS SYSTEMS Ltd. "ALL RIGHTS RESERVED" UNDER THE U.K. COPYRIGHT AND DESIGNS AND PATENTS ACT 1988.

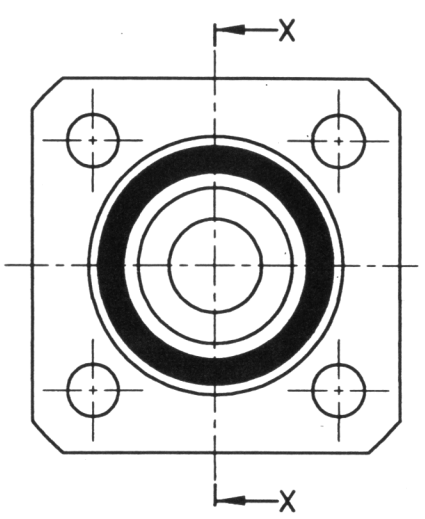

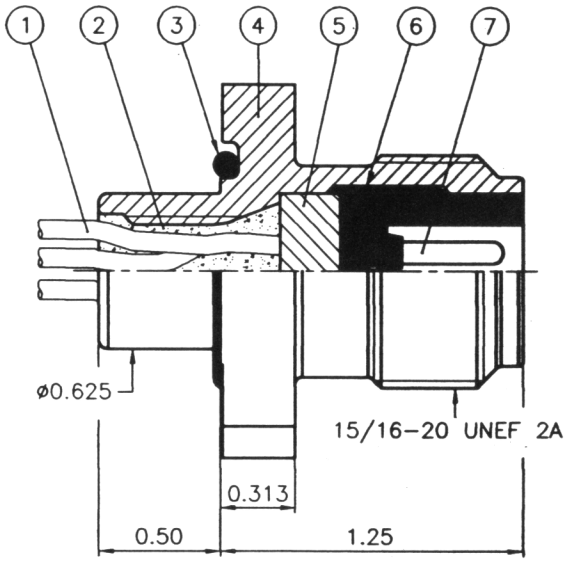

SECTION X-X

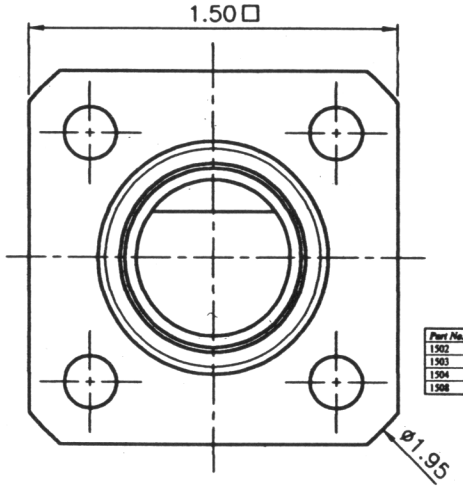

Part No.	Contact Size	Conductor Size (Options)	Current Capacity
1502	3/32	16 awg (14 awg)	13A (18A)
1503	3/32	16 awg (14 awg)	10A (15A)
1504	1/16	16 awg	8A
1508	1/16	16 awg	7A

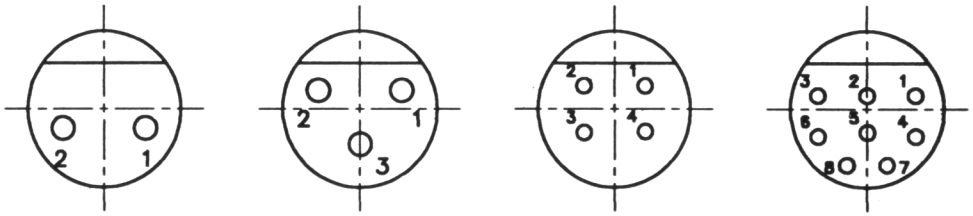

5506-1502 5506-1503 5506-1504 5506-1508

VIEW ON CONNECTOR FRONT FACE

ITEM No.	QTY.	PART No.	DESCRIPTION	MATERIAL
7	8	55-00-00-1010	#16 PIN CONTACT	BRASS
7	4	55-00-00-1010	#16 PIN CONTACT	BRASS
7	3	55-00-00-1008	#12 PIN CONTACT	BRASS
7	2	55-00-00-1008	#12 PIN CONTACT	BRASS
6	--		CONNECTOR BODY	NEOPRENE
5	1	55-00-15-1020	JIG PLATE	GRP
4	1	55-07-15-1016	RECEPTACLE BODY	316 St. St.
3	2	BS1806-116	'O' SEAL	MED. NITRILE
2	1		FILLING COMPOUND	EPOXY
1	--		TAILING WIRE	PTFE INSULATED

SURFACE FINISH	UNLESS OTHERWISE SPECIFIED DIMENSIONS ARE IN INCHES TOLERANCES ARE: DECIMALS / ANGLES	MATERIAL/SPECIFICATION	TITLE
SCALE: 2:1		----------	PANEL MOUNT RECEPTACLE CONNECTOR GENERAL ARRANGEMENT
SIZE: A3			

DJH			26-9-95	—
DRAWN	CHECKED	APPROVED	DATE	REV. REF. No.
DRAWING No. 55-06-15-1002			SHEET No. 1 OF 1	REV. No.
SERIES	STYLE	SIZE	NUMBER	

55-13

SEACON

C

SCS PART No.	CAD REF. No.	IF IN DOUBT ASK DO NOT SCALE
----------	C:\DWGS\SCS\1003_2_C.DWG	

THIS DOCUMENT IS PROPRIETARY AND CONFIDENTIAL TO SEA CONNECTIONS SYSTEMS Ltd. ANY INFORMATION CONTAINED HEREON, MAY NOT BE REPRODUCED AND/OR CONVEYED TO ANY THIRD PARTY etc., AND NO ARTICLE MAY BE MANUFACTURED AND/OR ASSEMBLED IN ACCORDANCE WITH THIS DRAWING WITHOUT THE PRIOR WRITTEN CONSENT OF SEA CONNECTIONS SYSTEMS Ltd. "ALL RIGHTS RESERVED" UNDER THE U.K. COPYRIGHT AND DESIGNS AND PATENTS ACT 1988.

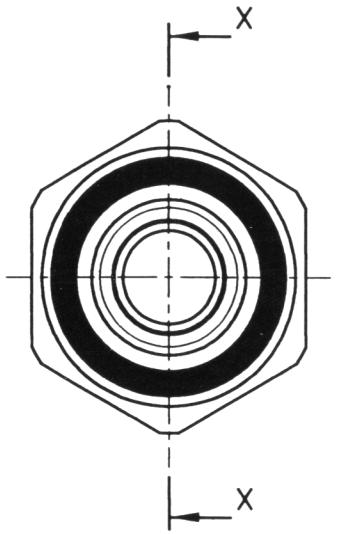

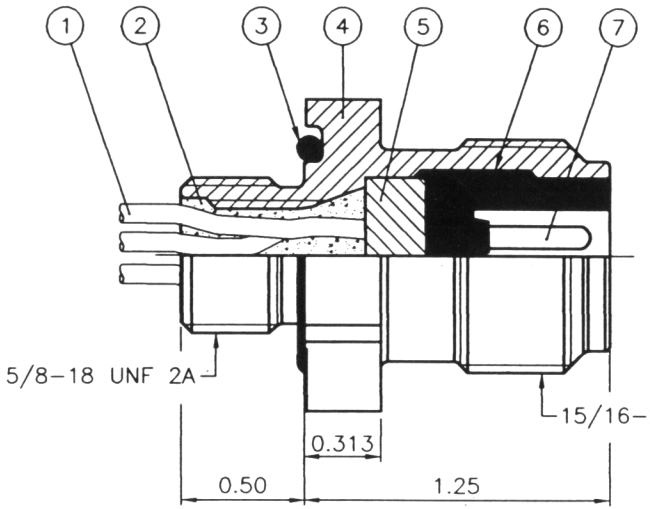

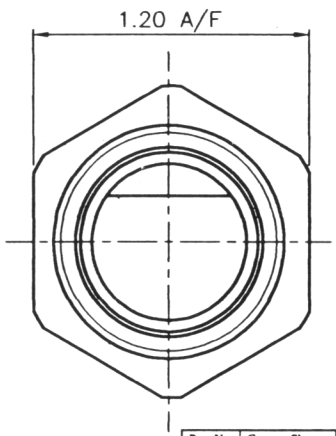

PART SECTION X–X

Part No.	Contact Size	Conductor Size (Option)	Current Capacity
1502	3/32	16 awg (14 awg)	13A (18A)
1503	3/32	16 awg (14 awg)	10A (15A)
1504	1/16	16 awg	8A
1508	1/16	16 awg	7A

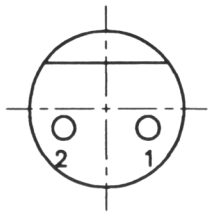

5507–1502

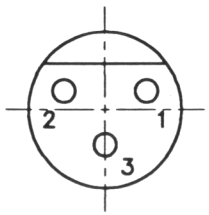

5507–1503

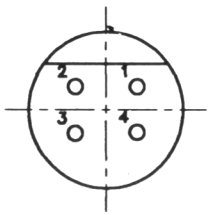

5507–1504

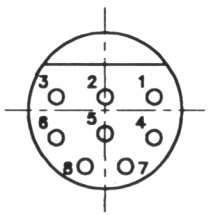

5507–1508

VIEW ON CONNECTOR FRONT FACE

ITEM No.	QTY.	PART No.	DESCRIPTION	MATERIAL
7	8	55–00–00–1010	#16 PIN CONTACT	BRASS
7	4	55–00–00–1010	#16 PIN CONTACT	BRASS
7	3	55–00–00–1008	#12 PIN CONTACT	BRASS
7	2	55–00–00–1008	#12 PIN CONTACT	BRASS
6	--		CONNECTOR BODY	NEOPRENE
5	1	55–00–15–1020	JIG PLATE	GRP
4	1	55–07–15–1015	RECEPTACLE BODY	316 St. St.
3	2	BS1806–116	'O' SEAL	MED. NITRILE
2	1		FILLING COMPOUND	EPOXY
1	--		TAILING WIRE	PTFE INSULATED

SURFACE FINISH	UNLESS OTHERWISE SPECIFIED DIMENSIONS ARE IN INCHES TOLERANCES ARE: DECIMALS / ANGLES	MATERIAL/SPECIFICATION	TITLE
SCALE: 2:1		----------	BULKHEAD RECEPTACLE CONNECTOR GENERAL ARRANGEMENT
SIZE: A3			

DJH			26-9-95	———
DRAWN	CHECKED	APPROVED	DATE	REV. REF. No.
DRAWING No. 55-07-15-1003			SHEET No. 1 OF 1	REV. No.
SERIES	STYLE	SIZE	NUMBER	

SEACON

C

SCS PART No.	CAD REF. No.	IF IN DOUBT ASK DO NOT SCALE	
----------	C:\DWGS\SCS\1044_1_B.DWG		

THIS DOCUMENT IS PROPRIETARY AND CONFIDENTIAL TO SEA CONNECTIONS SYSTEMS Ltd. ANY INFORMATION CONTAINED HEREON, MAY NOT BE REPRODUCED AND/OR CONVEYED TO ANY THIRD PARTY etc., AND NO ARTICLE MAY BE MANUFACTURED AND/OR ASSEMBLED IN ACCORDANCE WITH THIS DRAWING WITHOUT THE PRIOR WRITTEN CONSENT OF SEA CONNECTIONS SYSTEMS Ltd. "ALL RIGHTS RESERVED" UNDER THE U.K. COPYRIGHT AND DESIGNS AND PATENTS ACT 1988.

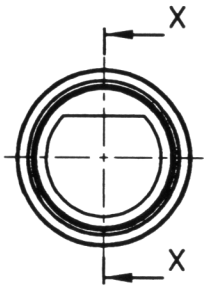

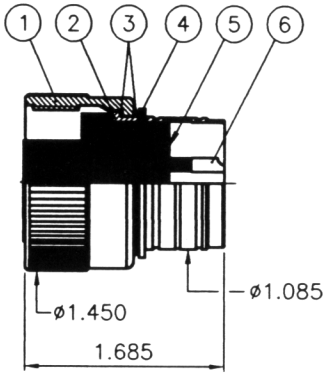

PART SECTION X–X

Part No.	*Contact Size*	*Conductor Size (Option)*	*Current Capacity*
2003	1/8	16 awg (14 awg)	10A (15A)
2004	1/8	16 awg (14 awg)	8A (12A)
2006	1/8	16 awg (14 awg)	8A (12A)
2008	3/32	16 awg	7A

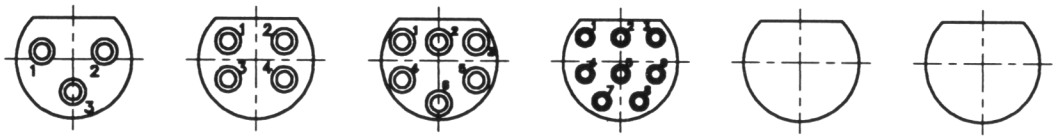

55A1–2003 55A1–2004 55A1–2006 55A1–2008 55A1–20** 55A1–20**

VIEW ON CONNECTOR FRONT FACE

ITEM No.	QTY.	PART No.	DESCRIPTION	MATERIAL
6	--	55-00-00-1011	#16 SOCKET CONTACT	BRASS
6	--	55-00-00-1009	#12 SOCKET CONTACT	BRASS
6	--	55-00-00-1023	#10 SOCKET CONTACT	BRASS
5	--		CONNECTOR BODY	NEOPRENE
4	1	WST-109-PA-S16	SPIRAL RETAINING RING	316 St. St.
3	2	55-00-20-1039	THRUST WASHER	BLACK ACETAL
2	1	55-06-20-1034	PLUG BODY	316L St. St.
1	1	55-00-20-1038	ENGAGING NUT	316L St. St.

SURFACE FINISH	UNLESS OTHERWISE SPECIFIED DIMENSIONS ARE IN INCHES TOLERANCES ARE: DECIMALS ANGLES	MATERIAL/SPECIFICATION	TITLE
SCALE: 1 : 1		-----	SIZE 20 ATTACHABLE PLUG CONNECTOR GENERAL ARRANGEMENT
SIZE: A3			

DJH			22-1-96	
DRAWN	CHECKED	APPROVED	DATE	REV. REF. No.
DRAWING No. 55-A1-20-1044			SHEET No. 1 OF 1	REV. No.
SERIES	STYLE	SIZE	NUMBER	

SEACON C

55-15

SCS PART No.	CAD REF. No.	IF IN DOUBT ASK DO NOT SCALE
----------	C:\DWGS\SCS\1046_1_B.DWG	

THIS DOCUMENT IS PROPRIETARY AND CONFIDENTIAL TO SEA CONNECTIONS SYSTEMS Ltd. ANY INFORMATION CONTAINED HEREON, MAY NOT BE REPRODUCED AND/OR CONVEYED TO ANY THIRD PARTY etc., AND NO ARTICLE MAY BE MANUFACTURED AND/OR ASSEMBLED IN ACCORDANCE WITH THIS DRAWING WITHOUT THE PRIOR WRITTEN CONSENT OF SEA CONNECTIONS SYSTEMS Ltd. "ALL RIGHTS RESERVED" UNDER THE U.K. COPYRIGHT AND DESIGNS AND PATENTS ACT 1988.

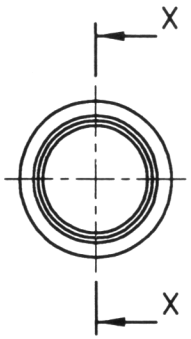

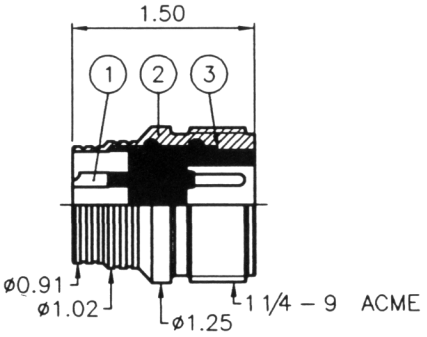

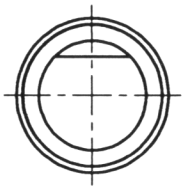

PART SECTION X–X

Part No.	*Contact Size*	*Conductor Size (Option)*	*Current Capacity*
2003	1/8	16 awg (14 awg)	10A (15A)
2004	1/8	16 awg (14 awg)	8A (12A)
2006	1/8	16 awg (14 awg)	8A (12A)
2008	3/32	16 awg	7A

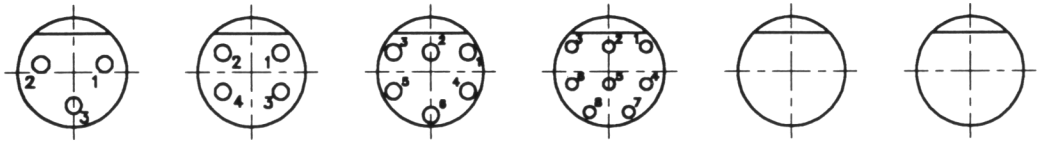

VIEW ON CONNECTOR FRONT FACE

ITEM No.	QTY.	PART No.	DESCRIPTION	MATERIAL
3	--		CONNECTOR BODY	NEOPRENE
2	1	55-A2-20-1037	RECEPTACLE BODY	316L St. St.
1	--	55-00-00-1013	#16 PIN CONTACT	BRASS
1	--	55-00-00-1012	#12 PIN CONTACT	BRASS
1	--	55-00-00-1025	#10 PIN CONTACT	BRASS

SURFACE FINISH	UNLESS OTHERWISE SPECIFIED DIMENSIONS ARE IN INCHES TOLERANCES ARE: DECIMALS ANGLES	MATERIAL/SPECIFICATION	TITLE	DJH	22-1-96
SCALE: 1 : 1		-----	SIZE 20 ATTACHABLE RECEPTACLE CONNECTOR GENERAL ARRANGEMENT	DRAWN / CHECKED / APPROVED	DATE / REV. REF. No.
SIZE: A3				DRAWING No. 55-A2-20-1046 (SERIES / STYLE / SIZE / NUMBER)	SHEET No. 1 OF 1 / REV. No.

55-16

SCS PART No.	CAD REF. No.	IF IN DOUBT ASK DO NOT SCALE
----------	C:\DWGS\SCS\1041_1_B.DWG	

THIS DOCUMENT IS PROPRIETARY AND CONFIDENTIAL TO SEA CONNECTIONS SYSTEMS Ltd. ANY INFORMATION CONTAINED HEREON, MAY NOT BE REPRODUCED AND/OR CONVEYED TO ANY THIRD PARTY etc., AND NO ARTICLE MAY BE MANUFACTURED AND/OR ASSEMBLED IN ACCORDANCE WITH THIS DRAWING WITHOUT THE PRIOR WRITTEN CONSENT OF SEA CONNECTIONS SYSTEMS Ltd. "ALL RIGHTS RESERVED" UNDER THE U.K. COPYRIGHT AND DESIGNS AND PATENTS ACT 1988.

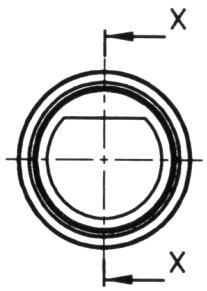

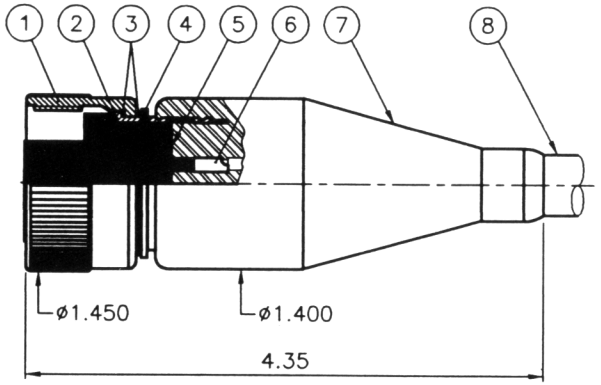

PART SECTION X–X

Part No.	*Contact Size*	*Conductor Size (Option)*	*Current Capacity*
2003	1/8	16 awg (14 awg)	10A (15A)
2004	1/8	16 awg (14 awg)	8A (12A)
2006	1/8	16 awg (14 awg)	8A (12A)
2008	3/32	16 awg	7A

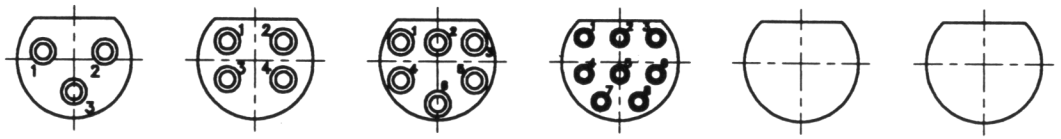

5501–2003 5501–2004 5501–2006 5501–2008 5501–20** 5501–20**

VIEW ON CONNECTOR FRONT FACE

ITEM No.	QTY.	PART No.	DESCRIPTION	MATERIAL
8	1		CABLE	
7	--		TAIL MOULD	NEOPRENE
6	--	55-00-00-1011	#16 SOCKET CONTACT	BRASS
6	--	55-00-00-1009	#12 SOCKET CONTACT	BRASS
6	--	55-00-00-1023	#10 SOCKET CONTACT	BRASS
5	--		CONNECTOR BODY	NEOPRENE
4	1	WST-109-PA-S16	SPIRAL RETAINING RING	316 St. St.
3	2	55-00-20-1039	THRUST WASHER	BLACK ACETAL
2	1	55-06-20-1034	PLUG BODY	316L St. St.
1	1	55-00-20-1038	ENGAGING NUT	316L St. St.

SURFACE FINISH	UNLESS OTHERWISE SPECIFIED DIMENSIONS ARE IN INCHES TOLERANCES ARE: DECIMALS / ANGLES	MATERIAL/SPECIFICATION	TITLE
SCALE: 1 : 1		-----	SIZE 20 ATTACHABLE PLUG CONNECTOR MOULDED "STRAIGHT" GENERAL ARRANGEMENT
SIZE: A3			

DJH			22-1-96	———
DRAWN	CHECKED	APPROVED	DATE	REV. REF. No.
DRAWING No. 55-01-20-1041			SHEET No. 1 OF 1	REV. No.
SERIES	STYLE	SIZE	NUMBER	

55-17

SEACON

C

SCS PART No.	CAD REF. No.	IF IN DOUBT ASK DO NOT SCALE
----------	C:\DWGS\SCS\1045_1_B.DWG	

THIS DOCUMENT IS PROPRIETARY AND CONFIDENTIAL TO SEA CONNECTIONS SYSTEMS Ltd. ANY INFORMATION CONTAINED HEREON, MAY NOT BE REPRODUCED AND/OR CONVEYED TO ANY THIRD PARTY etc., AND NO ARTICLE MAY BE MANUFACTURED AND/OR ASSEMBLED IN ACCORDANCE WITH THIS DRAWING WITHOUT THE PRIOR WRITTEN CONSENT OF SEA CONNECTIONS SYSTEMS Ltd. "ALL RIGHTS RESERVED" UNDER THE U.K. COPYRIGHT AND DESIGNS AND PATENTS ACT 1988.

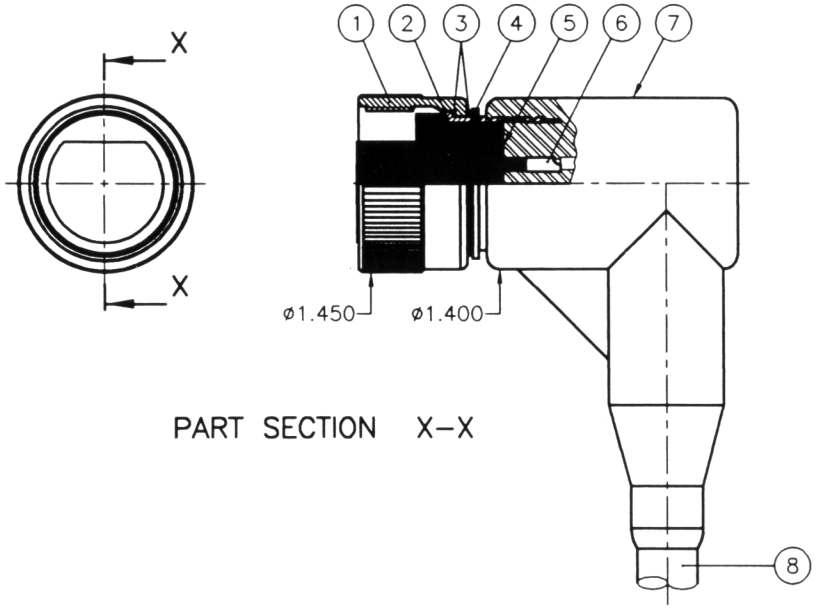

PART SECTION X–X

Part No.	Contact Size	Conductor Size (Option)	Current Capacity
2003	1/8	16 awg (14 awg)	10A (15A)
2004	1/8	16 awg (14 awg)	8A (12A)
2006	1/8	16 awg (14 awg)	8A (12A)
2008	3/32	16 awg	7A

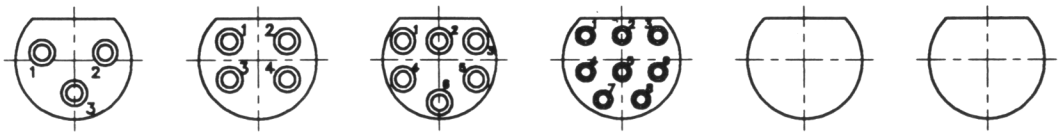

VIEW ON CONNECTOR FRONT FACE

ITEM No.	QTY.	PART No.	DESCRIPTION	MATERIAL
8	1		CABLE	
7	--		TAIL MOULD	NEOPRENE
6	--	55-00-00-1011	#16 SOCKET CONTACT	BRASS
6	--	55-00-00-1009	#12 SOCKET CONTACT	BRASS
6	--	55-00-00-1023	#10 SOCKET CONTACT	BRASS
5	--		CONNECTOR BODY	NEOPRENE
4	1	WST-109-PA-S16	SPIRAL RETAINING RING	316 St. St.
3	2	55-00-20-1039	THRUST WASHER	BLACK ACETAL
2	1	55-06-20-1034	PLUG BODY	316L St. St.
1	1	55-00-20-1038	ENGAGING NUT	316L St. St.

SURFACE FINISH	UNLESS OTHERWISE SPECIFIED DIMENSIONS ARE IN INCHES TOLERANCES ARE: DECIMALS / ANGLES	MATERIAL/SPECIFICATION	TITLE
SCALE: 1 : 1		-----	SIZE 20 ATTACHABLE PLUG CONNECTOR MOULDED "RIGHT ANGLE" GENERAL ARRANGEMENT
SIZE: A3			

DJH			22-1-96	———
DRAWN	CHECKED	APPROVED	DATE	REV. REF. No.
DRAWING No. 55-R1-20-1045			SHEET No. 1 OF 1	REV. No.
SERIES	STYLE	SIZE	NUMBER	

SEACON

55-18

SCS PART No.	CAD REF. No.	IF IN DOUBT ASK DO NOT SCALE
----------	C:\DWGS\SCS\1048_1_B.DWG	

THIS DOCUMENT IS PROPRIETARY AND CONFIDENTIAL TO SEA CONNECTIONS SYSTEMS Ltd. ANY INFORMATION CONTAINED HEREON, MAY NOT BE REPRODUCED AND/OR CONVEYED TO ANY THIRD PARTY etc., AND NO ARTICLE MAY BE MANUFACTURED AND/OR ASSEMBLED IN ACCORDANCE WITH THIS DRAWING WITHOUT THE PRIOR WRITTEN CONSENT OF SEA CONNECTIONS SYSTEMS Ltd. "ALL RIGHTS RESERVED" UNDER THE U.K. COPYRIGHT AND DESIGNS AND PATENTS ACT 1988.

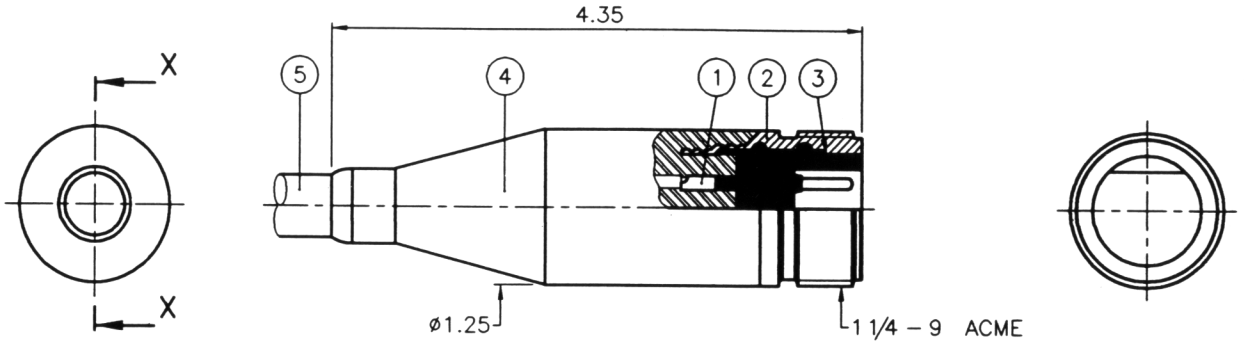

PART SECTION X–X

Part No.	*Contact Size*	*Conductor Size (Option)*	*Current Capacity*
2003	1/8	16 awg (14 awg)	10A (15A)
2004	1/8	16 awg (14 awg)	8A (12A)
2006	1/8	16 awg (14 awg)	8A (12A)
2008	3/32	16 awg	7A

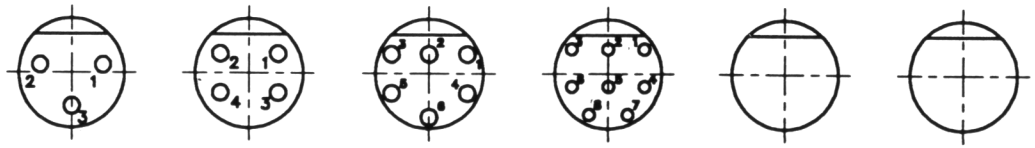

VIEW ON CONNECTOR FRONT FACE

ITEM No.	QTY.	PART No.	DESCRIPTION	MATERIAL
5	--		CABLE	
4	--		TAIL MOULD	NEOPRENE
3	--		CONNECTOR BODY	NEOPRENE
2	1	55-A2-20-1037	RECEPTACLE BODY	316L St. St.
1	--	55-00-00-1013	#16 PIN CONTACT	BRASS
1	--	55-00-00-1012	#12 PIN CONTACT	BRASS
1	--	55-00-00-1025	#10 PIN CONTACT	BRASS

SURFACE FINISH	UNLESS OTHERWISE SPECIFIED DIMENSIONS ARE IN INCHES TOLERANCES ARE: DECIMALS ANGLES	MATERIAL/SPECIFICATION	TITLE
SCALE: 1 : 1		----------	SIZE 20 ATTACHABLE RECEPTACLE CONNECTOR MOULDED "STRAIGHT" GENERAL ARRANGEMENT
SIZE: A3			

DJH			22-1-96	———
DRAWN	CHECKED	APPROVED	DATE	REV. REF. No.
DRAWING No. 55-02-20-1048			SHEET No. 1 OF 1	REV. No.
SERIES	STYLE	SIZE	NUMBER	

SEACON

55-19

SCS PART No.	CAD REF. No.	IF IN DOUBT ASK DO NOT SCALE
----------	C:\DWGS\SCS\1047_1_B.DWG	

THIS DOCUMENT IS PROPRIETARY AND CONFIDENTIAL TO SEA CONNECTIONS SYSTEMS Ltd. ANY INFORMATION CONTAINED HEREON, MAY NOT BE REPRODUCED AND/OR CONVEYED TO ANY THIRD PARTY etc., AND NO ARTICLE MAY BE MANUFACTURED AND/OR ASSEMBLED IN ACCORDANCE WITH THIS DRAWING WITHOUT THE PRIOR WRITTEN CONSENT OF SEA CONNECTIONS SYSTEMS Ltd. "ALL RIGHTS RESERVED" UNDER THE U.K. COPYRIGHT AND DESIGNS AND PATENTS ACT 1988.

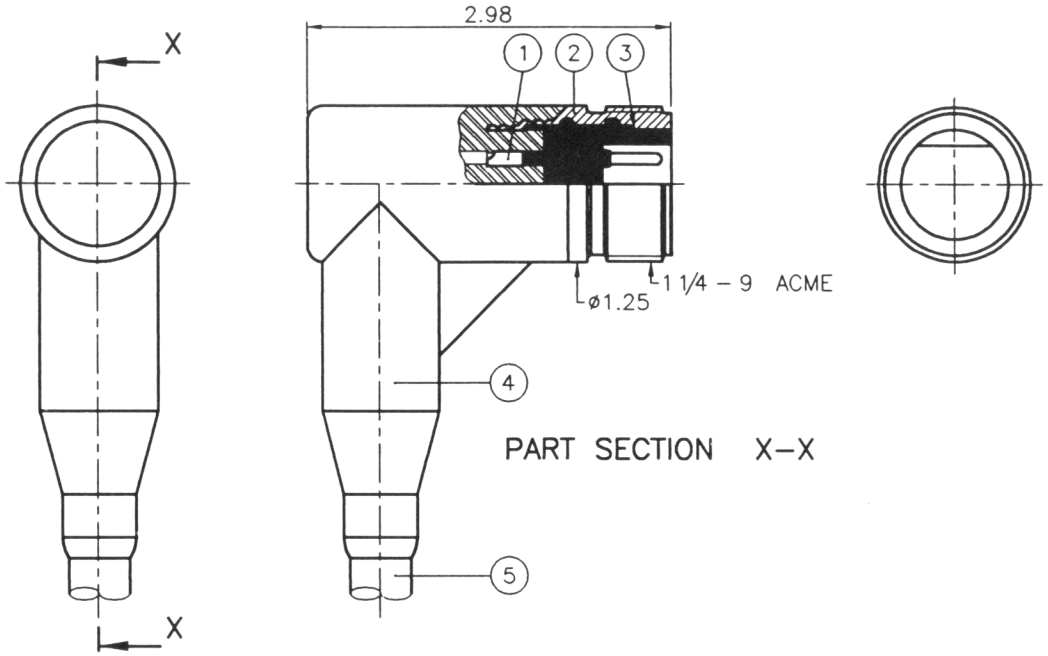

PART SECTION X–X

Part No.	*Contact Size*	*Conductor Size (Option)*	*Current Capacity*
2003	1/8	16 awg (14 awg)	10A (15A)
2004	1/8	16 awg (14 awg)	8A (12A)
2006	1/8	16 awg (14 awg)	8A (12A)
2008	3/32	16 awg	7A

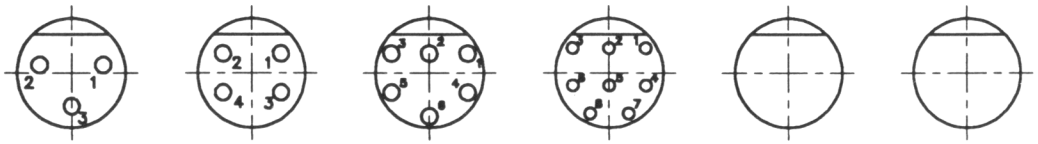

VIEW ON CONNECTOR FRONT FACE

ITEM No.	QTY.	PART No.	DESCRIPTION	MATERIAL
5	--		CABLE	
4	--		TAIL MOULD	NEOPRENE
3	--		CONNECTOR BODY	NEOPRENE
2	1	55-A2-20-1037	RECEPTACLE BODY	316L St. St.
1	--	55-00-00-1013	#16 PIN CONTACT	BRASS
1	--	55-00-00-1012	#12 PIN CONTACT	BRASS
1	--	55-00-00-1025	#10 PIN CONTACT	BRASS

SURFACE FINISH	UNLESS OTHERWISE SPECIFIED DIMENSIONS ARE IN INCHES TOLERANCES ARE: DECIMALS / ANGLES	MATERIAL/SPECIFICATION	TITLE
SCALE: 1 : 1		-----	SIZE 20 ATTACHABLE RECEPTACLE CONNECTOR MOULDED "RIGHT ANGLE" GENERAL ARRANGEMENT
SIZE: A3			

DJH			22-1-96	———
DRAWN	CHECKED	APPROVED	DATE	REV. REF. No.
DRAWING No. 55-R2-20-1047			SHEET No. 1 OF 1	REV. No.
SERIES	STYLE	SIZE	NUMBER	

55-20

SCS PART No.	CAD REF. No.	IF IN DOUBT ASK DO NOT SCALE
----------	C:\DWGS\SCS\1042_1_B.DWG	

THIS DOCUMENT IS PROPRIETARY AND CONFIDENTIAL TO SEA CONNECTIONS SYSTEMS Ltd. ANY INFORMATION CONTAINED HEREON, MAY NOT BE REPRODUCED AND/OR CONVEYED TO ANY THIRD PARTY etc., AND NO ARTICLE MAY BE MANUFACTURED AND/OR ASSEMBLED IN ACCORDANCE WITH THIS DRAWING WITHOUT THE PRIOR WRITTEN CONSENT OF SEA CONNECTIONS SYSTEMS Ltd. "ALL RIGHTS RESERVED" UNDER THE U.K. COPYRIGHT AND DESIGNS AND PATENTS ACT 1988.



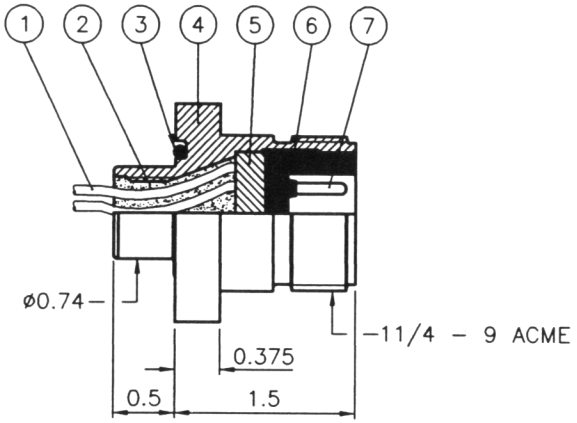

PART SECTION X–X

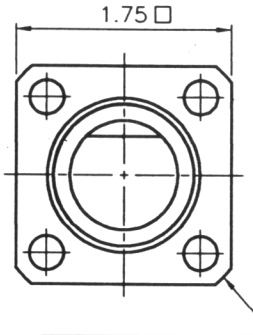

Part No.	*Contact Size*	*Conductor Size (Option)*	*Current Capacity*
2003	1/8	16 awg (14 awg)	10A (15A)
2004	1/8	16 awg (14 awg)	8A (12A)
2006	1/8	16 awg (14 awg)	8A (12A)
2008	3/32	16 awg	7A

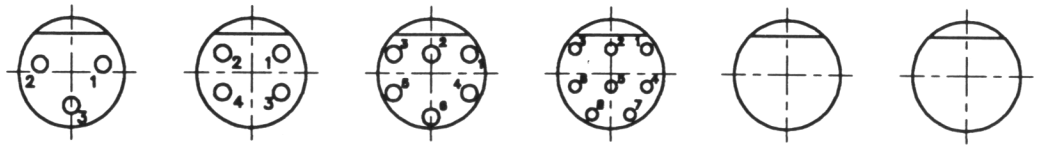

VIEW ON CONNECTOR FRONT FACE

ITEM No.	QTY.	PART No.	DESCRIPTION	MATERIAL
7	--	55–00–00–1010	#16 PIN CONTACT	BRASS
7	--	55–00–00–1008	#12 PIN CONTACT	BRASS
7	--	55–00–00–1025	#10 PIN CONTACT	BRASS
6	--		CONNECTOR BODY	NEOPRENE
5	1	55–00–20–1040	JIG PLATE	GRP
4	1	55–07–20–1036	RECEPTACLE BODY	316 St. St.
3	2	BS1806–118	'O' SEAL	MED. NITRILE
2	1		FILLING COMPOUND	EPOXY
1	--		TAILING WIRE	PTFE INSULATED

SURFACE FINISH	UNLESS OTHERWISE SPECIFIED DIMENSIONS ARE IN INCHES TOLERANCES ARE: DECIMALS / ANGLES	MATERIAL/SPECIFICATION	TITLE
SCALE: 1 : 1		----------	SIZE 20 PANEL MOUNT RECEPTACLE CONNECTOR GENERAL ARRANGEMENT
SIZE: A3			

DJH			22–1–96	
DRAWN	CHECKED	APPROVED	DATE	REV. REF. No.
DRAWING No. 55–06–20–1042 (SERIES / STYLE / SIZE / NUMBER)			SHEET No. 1 OF 1	REV. No.

SCS PART No.	CAD REF. No.	IF IN DOUBT ASK DO NOT SCALE	
----------	C:\DWGS\SCS\1043_1_B.DWG		

THIS DOCUMENT IS PROPRIETARY AND CONFIDENTIAL TO SEA CONNECTIONS SYSTEMS Ltd. ANY INFORMATION CONTAINED HEREON, MAY NOT BE REPRODUCED AND/OR CONVEYED TO ANY THIRD PARTY etc., AND NO ARTICLE MAY BE MANUFACTURED AND/OR ASSEMBLED IN ACCORDANCE WITH THIS DRAWING WITHOUT THE PRIOR WRITTEN CONSENT OF SEA CONNECTIONS SYSTEMS Ltd. "ALL RIGHTS RESERVED" UNDER THE U.K. COPYRIGHT AND DESIGNS AND PATENTS ACT 1988.

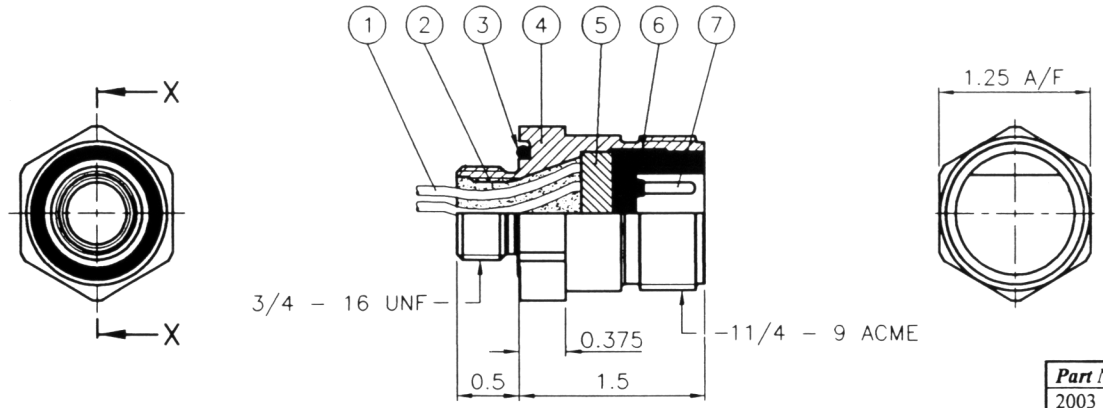

PART SECTION X–X

Part No.	*Contact Size*	*Conductor Size (Option)*	*Current Capacity*
2003	1/8	16 awg (14 awg)	10A (15A)
2004	1/8	16 awg (14 awg)	8A (12A)
2006	1/8	16 awg (14 awg)	8A (12A)
2008	3/32	16 awg	7A

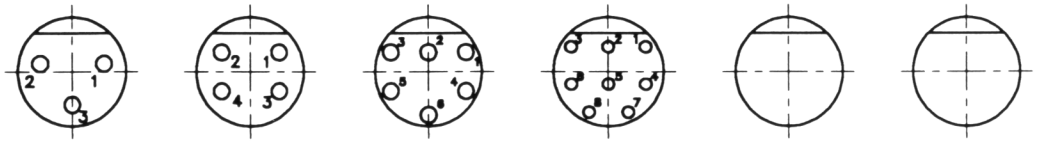

VIEW ON CONNECTOR FRONT FACE

ITEM No.	QTY.	PART No.	DESCRIPTION	MATERIAL
7	--	55-00-00-1010	#16 PIN CONTACT	BRASS
7	--	55-00-00-1008	#12 PIN CONTACT	BRASS
7	--	55-00-00-1025	#10 PIN CONTACT	BRASS
6	--		CONNECTOR BODY	NEOPRENE
5	1	55-00-20-1040	JIG PLATE	GRP
4	1	55-07-20-1035	RECEPTACLE BODY	316 St. St.
3	2	BS1806-118	'O' SEAL	MED. NITRILE
2	1		FILLING COMPOUND	EPOXY
1	--		TAILING WIRE	PTFE INSULATED

SURFACE FINISH	UNLESS OTHERWISE SPECIFIED DIMENSIONS ARE IN INCHES TOLERANCES ARE: DECIMALS / ANGLES	MATERIAL/SPECIFICATION	TITLE
SCALE: 1 : 1		----------	SIZE 20 BULKHEAD RECEPTACLE CONNECTOR GENERAL ARRANGEMENT
SIZE: A3			

DJH			22-1-96	
DRAWN	CHECKED	APPROVED	DATE	REV. REF. No.
DRAWING No. 55-07-20-1043			SHEET No. 1 OF 1	REV. No.
SERIES	STYLE	SIZE	NUMBER	

55-22

SEACON

C

SCS PART No.	CAD REF. No.	IF IN DOUBT ASK DO NOT SCALE
----------	C:\DWGS\SCS\1061_1_B.DWG	

THIS DOCUMENT IS PROPRIETARY AND CONFIDENTIAL TO SEA CONNECTIONS SYSTEMS Ltd. ANY INFORMATION CONTAINED HEREON, MAY NOT BE REPRODUCED AND/OR CONVEYED TO ANY THIRD PARTY etc., AND NO ARTICLE MAY BE MANUFACTURED AND/OR ASSEMBLED IN ACCORDANCE WITH THIS DRAWING WITHOUT THE PRIOR WRITTEN CONSENT OF SEA CONNECTIONS SYSTEMS Ltd. "ALL RIGHTS RESERVED" UNDER THE U.K. COPYRIGHT AND DESIGNS AND PATENTS ACT 1988.

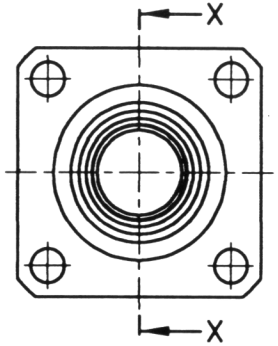

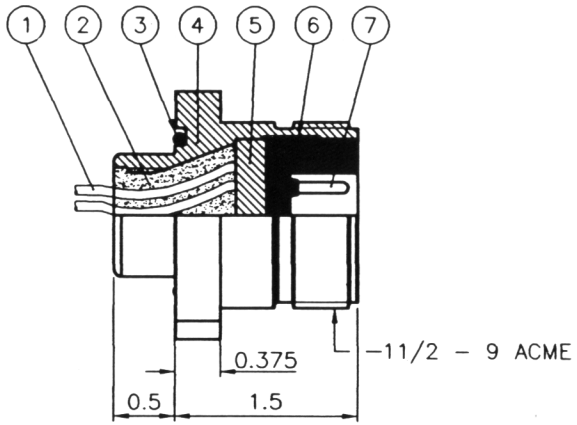

PART SECTION X–X

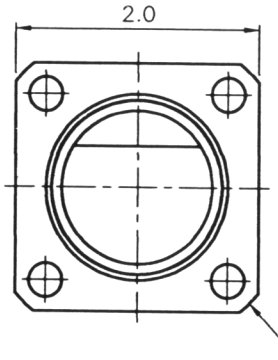

Part No.	Contact Size	Conductor Size	Current Capacity
2410	2@ 3/32, 8@ 1/8	16 AWG	7A
2412	3/32	16 AWG	7A
2420	1/16	18 AWG (16 AWG)	5A (7A)

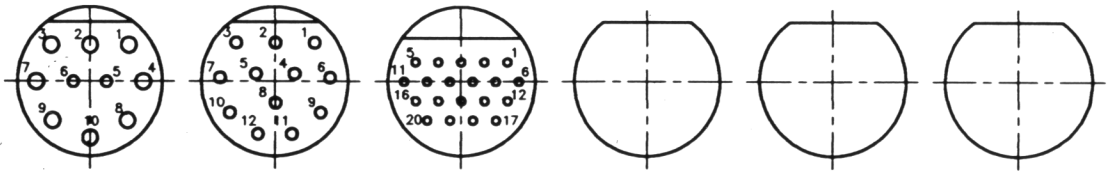

VIEW ON CONNECTOR FRONT FACE

ITEM No.	QTY.	PART No.	DESCRIPTION	MATERIAL
7	--	55-00-00-1010	#16 PIN CONTACT	BRASS
7	--	55-00-00-1008	#12 PIN CONTACT	BRASS
7	--	55-00-00-1025	#10 PIN CONTACT	BRASS
6	--		CONNECTOR BODY	NEOPRENE
5	1	55-00-24-1056	JIG PLATE	GRP
4	1	55-07-24-1051	RECEPTACLE BODY	316 St. St.
3	2	BS1806-122	'O' SEAL	MED. NITRILE
2	1		FILLING COMPOUND	EPOXY
1	--		TAILING WIRE	PTFE INSULATED

SURFACE FINISH	UNLESS OTHERWISE SPECIFIED DIMENSIONS ARE IN INCHES TOLERANCES ARE: DECIMALS / ANGLES	MATERIAL/SPECIFICATION	TITLE
SCALE: 1 : 1		----------	SIZE 24 PANEL MOUNT RECEPTACLE CONNECTOR GENERAL ARRANGEMENT
SIZE: A3			

DRAWN	CHECKED	APPROVED	DATE	REV. REF. No.
DJH			22-1-96	———

DRAWING No.	SHEET No.	REV. No.
55-06-24-1061	1 OF 1	
SERIES STYLE SIZE NUMBER		

SCS PART No.	CAD REF. No.	IF IN DOUBT ASK DO NOT SCALE
----------	C:\DWGS\SCS\1062_1_B.DWG	

THIS DOCUMENT IS PROPRIETARY AND CONFIDENTIAL TO SEA CONNECTIONS SYSTEMS Ltd. ANY INFORMATION CONTAINED HEREON, MAY NOT BE REPRODUCED AND/OR CONVEYED TO ANY THIRD PARTY etc., AND NO ARTICLE MAY BE MANUFACTURED AND/OR ASSEMBLED IN ACCORDANCE WITH THIS DRAWING WITHOUT THE PRIOR WRITTEN CONSENT OF SEA CONNECTIONS SYSTEMS Ltd. "ALL RIGHTS RESERVED" UNDER THE U.K. COPYRIGHT AND DESIGNS AND PATENTS ACT 1988.



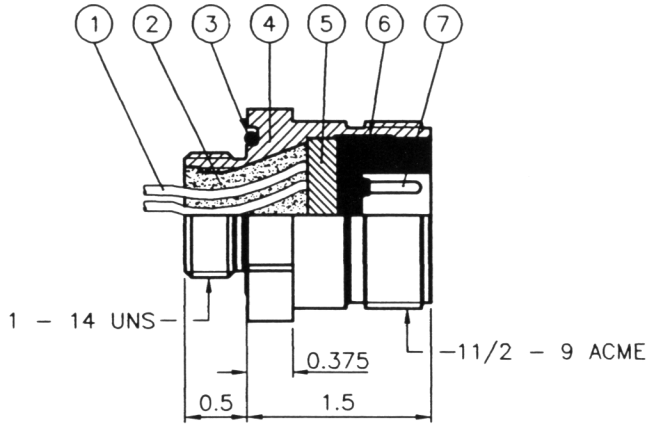

PART SECTION X–X

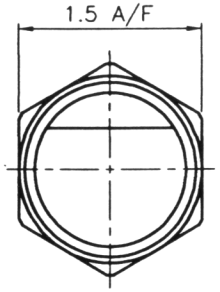

Part No.	Contact Size	Conductor Size	Current Capacity
2410	2@ 3/32, 8@ 1/8	16 AWG	7A
2412	3/32	16 AWG	7A
2420	1/16	18 AWG (16 AWG)	5A (7A)

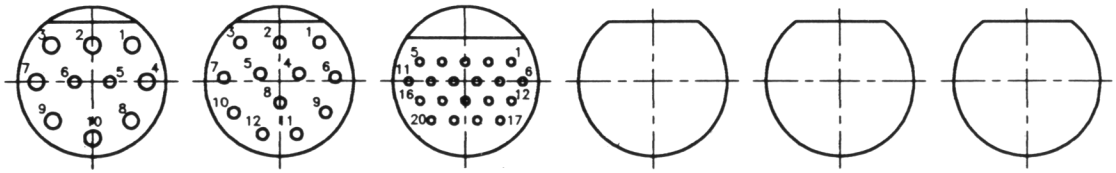

VIEW ON CONNECTOR FRONT FACE

ITEM No.	QTY.	PART No.	DESCRIPTION	MATERIAL
7	--	55–00–00–1010	#16 PIN CONTACT	BRASS
7	--	55–00–00–1008	#12 PIN CONTACT	BRASS
7	--	55–00–00–1025	#10 PIN CONTACT	BRASS
6	--		CONNECTOR BODY	NEOPRENE
5	1	55–00–24–1056	JIG PLATE	GRP
4	1	55–07–24–1051	RECEPTACLE BODY	316 St. St.
3	2	BS1806–122	'O' SEAL	MED. NITRILE
2	1		FILLING COMPOUND	EPOXY
1	--		TAILING WIRE	PTFE INSULATED

SURFACE FINISH	UNLESS OTHERWISE SPECIFIED DIMENSIONS ARE IN INCHES TOLERANCES ARE: DECIMALS / ANGLES	MATERIAL/SPECIFICATION	TITLE
SCALE: 1 : 1		----------	SIZE 24 BULKHEAD RECEPTACLE CONNECTOR GENERAL ARRANGEMENT
SIZE: A3			

DJH			22-1-96	———
DRAWN	CHECKED	APPROVED	DATE	REV. REF. No.
DRAWING No. 55-07-24-1062			SHEET No. 1 OF 1	REV. No.
SERIES	STYLE	SIZE	NUMBER	

55-24

SCS PART No.	CAD REF. No.	IF IN DOUBT ASK DO NOT SCALE
----------	C:\DWGS\SCS\1067_1_B.DWG	

THIS DOCUMENT IS PROPRIETARY AND CONFIDENTIAL TO SEA CONNECTIONS SYSTEMS Ltd. ANY INFORMATION CONTAINED HEREON, MAY NOT BE REPRODUCED AND/OR CONVEYED TO ANY THIRD PARTY etc., AND NO ARTICLE MAY BE MANUFACTURED AND/OR ASSEMBLED IN ACCORDANCE WITH THIS DRAWING WITHOUT THE PRIOR WRITTEN CONSENT OF SEA CONNECTIONS SYSTEMS Ltd. "ALL RIGHTS RESERVED" UNDER THE U.K. COPYRIGHT AND DESIGNS AND PATENTS ACT 1988.

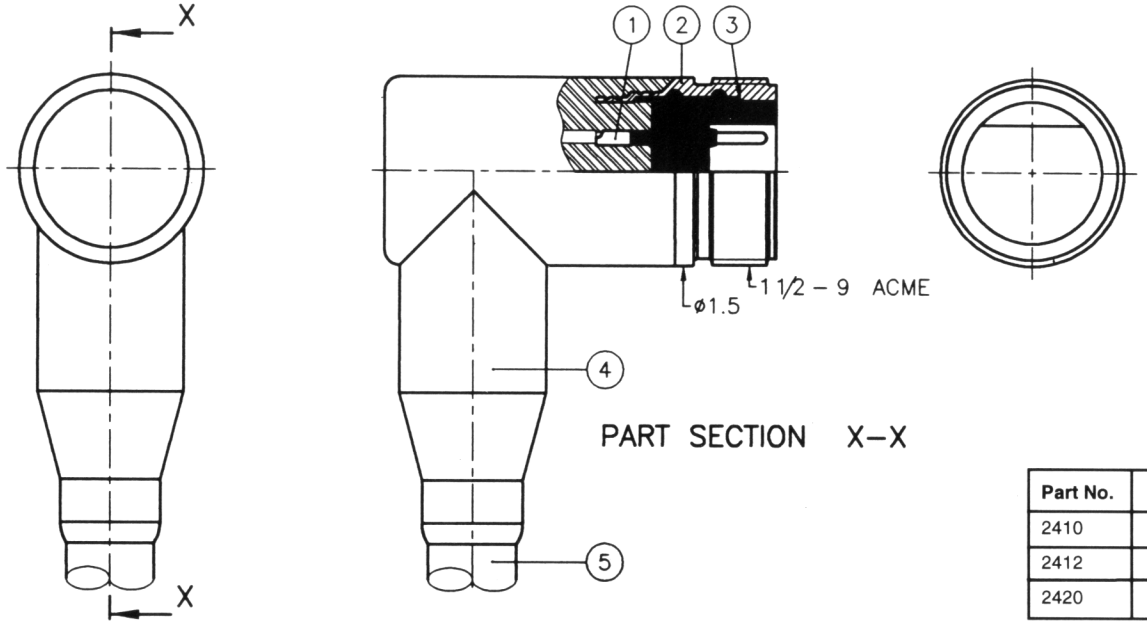

PART SECTION X–X

Part No.	Contact Size	Conductor Size	Current Capacity
2410	2@ 3/32, 8@ 1/8	16 AWG	7A
2412	3/32	16 AWG	7A
2420	1/16	18 AWG (16 AWG)	5A (7A)

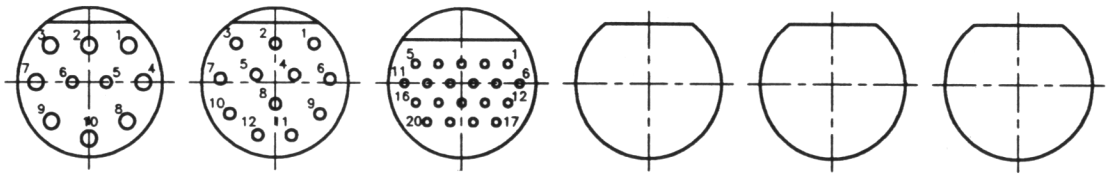

VIEW ON CONNECTOR FRONT FACE

ITEM No.	QTY.	PART No.	DESCRIPTION	MATERIAL
5	--		CABLE	
4	--		TAIL MOULD	NEOPRENE
3	--		CONNECTOR BODY	NEOPRENE
2	1	55-A2-24-1053	RECEPTACLE BODY	316L St. St.
1	--	55-00-00-1013	#16 PIN CONTACT	BRASS
1	--	55-00-00-1012	#12 PIN CONTACT	BRASS
1	--	55-00-00-1025	#10 PIN CONTACT	BRASS

SURFACE FINISH	UNLESS OTHERWISE SPECIFIED DIMENSIONS ARE IN INCHES TOLERANCES ARE: DECIMALS / ANGLES	MATERIAL/SPECIFICATION	TITLE
SCALE: 1 : 1		----------	SIZE 24 ATTACHABLE RECEPTACLE CONNECTOR MOULDED "RIGHT ANGLE" GENERAL ARRANGEMENT
SIZE: A3			

DRAWN	CHECKED	APPROVED	DATE	REV. REF. No.
DJH			22-1-96	———

DRAWING No.				SHEET No.	REV. No.
55-R2-24-1067				1 OF 1	
SERIES	STYLE	SIZE	NUMBER		

SCS PART No.	CAD REF. No.	IF IN DOUBT ASK DO NOT SCALE
----------	C:\DWGS\SCS\1060_1_B.DWG	

THIS DOCUMENT IS PROPRIETARY AND CONFIDENTIAL TO SEA CONNECTIONS SYSTEMS Ltd. ANY INFORMATION CONTAINED HEREON, MAY NOT BE REPRODUCED AND/OR CONVEYED TO ANY THIRD PARTY etc., AND NO ARTICLE MAY BE MANUFACTURED AND/OR ASSEMBLED IN ACCORDANCE WITH THIS DRAWING WITHOUT THE PRIOR WRITTEN CONSENT OF SEA CONNECTIONS SYSTEMS Ltd. "ALL RIGHTS RESERVED" UNDER THE U.K. COPYRIGHT AND DESIGNS AND PATENTS ACT 1988.

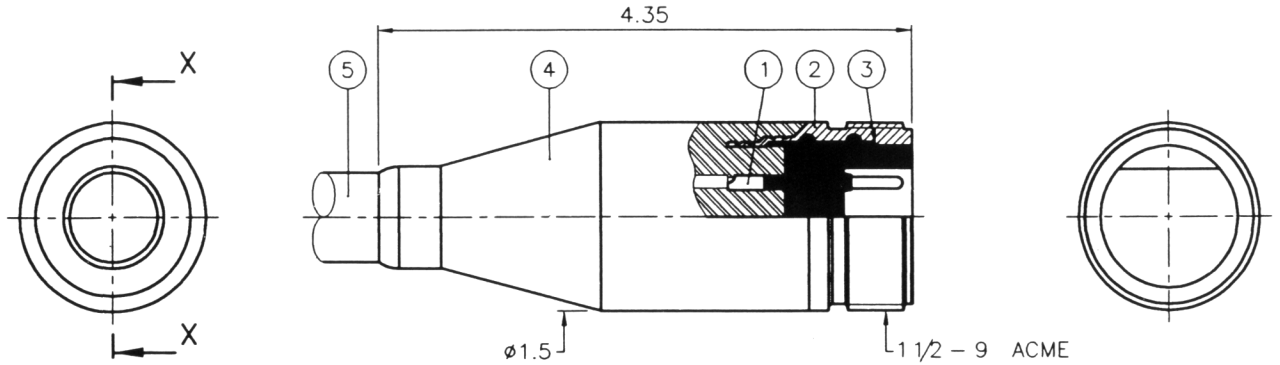

PART SECTION X–X

Part No.	Contact Size	Conductor Size	Current Capacity
2410	2@ 3/32, 8@ 1/8	16 AWG	7A
2412	3/32	16 AWG	7A
2420	1/16	18 AWG (16 AWG)	5A (7A)

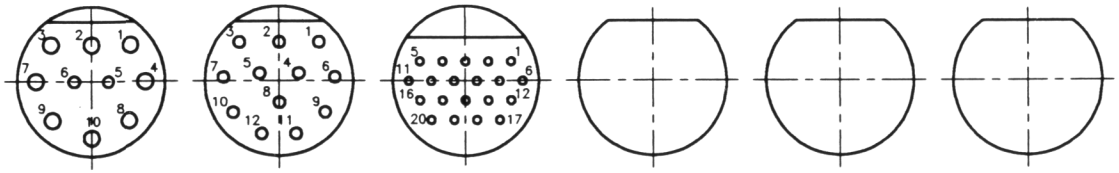

5502-2410 5502-2412 5502-2420 5502-24** 5502-24** 5502-24**

VIEW ON CONNECTOR FRONT FACE

ITEM No.	QTY.	PART No.	DESCRIPTION	MATERIAL
5	--		CABLE	
4	--		TAIL MOULD	NEOPRENE
3	--		CONNECTOR BODY	NEOPRENE
2	1	55-A2-24-1053	RECEPTACLE BODY	316L St. St.
1	--	55-00-00-1013	#16 PIN CONTACT	BRASS
1	--	55-00-00-1012	#12 PIN CONTACT	BRASS
1	--	55-00-00-1025	#10 PIN CONTACT	BRASS

SURFACE FINISH	UNLESS OTHERWISE SPECIFIED DIMENSIONS ARE IN INCHES TOLERANCES ARE: DECIMALS ANGLES	MATERIAL/SPECIFICATION	TITLE
SCALE: 1 : 1		----------	SIZE 24 ATTACHABLE RECEPTACLE CONNECTOR MOULDED "STRAIGHT" GENERAL ARRANGEMENT
SIZE: A3			

DJH			22-1-96	
DRAWN	CHECKED	APPROVED	DATE	REV. REF. No.
DRAWING No. 55-02-24-1060			SHEET No. 1 OF 1	REV. No.
SERIES	STYLE	SIZE	NUMBER	

55-26

SEA CON

C

SCS PART No.	CAD REF. No.	IF IN DOUBT ASK DO NOT SCALE
----------	C:\DWGS\SCS\1065_1_B.DWG	

THIS DOCUMENT IS PROPRIETARY AND CONFIDENTIAL TO SEA CONNECTIONS SYSTEMS Ltd. ANY INFORMATION CONTAINED HEREON, MAY NOT BE REPRODUCED AND/OR CONVEYED TO ANY THIRD PARTY etc., AND NO ARTICLE MAY BE MANUFACTURED AND/OR ASSEMBLED IN ACCORDANCE WITH THIS DRAWING WITHOUT THE PRIOR WRITTEN CONSENT OF SEA CONNECTIONS SYSTEMS Ltd. "ALL RIGHTS RESERVED" UNDER THE U.K. COPYRIGHT AND DESIGNS AND PATENTS ACT 1988.

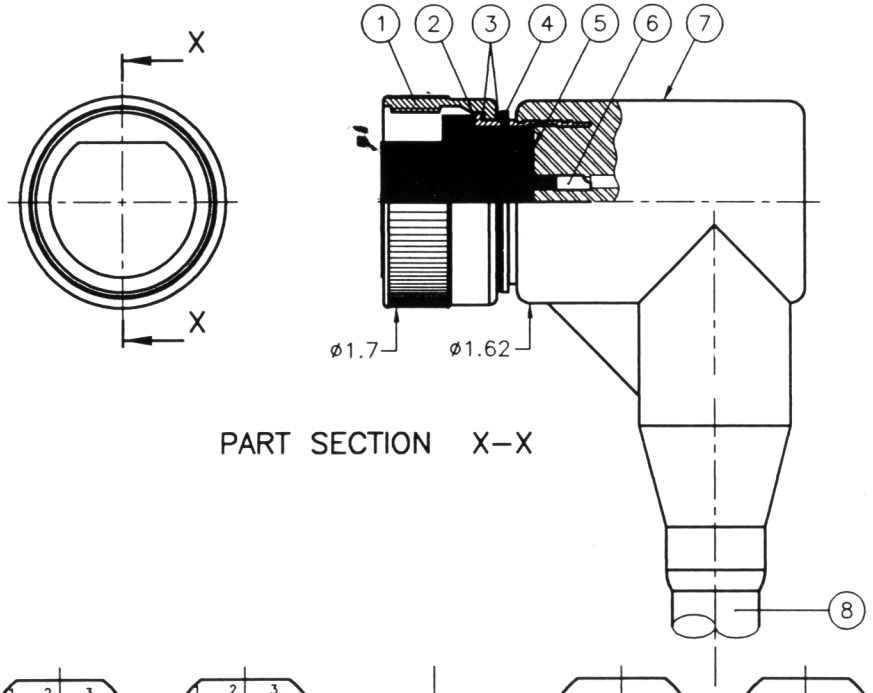

PART SECTION X–X

Part No.	Contact Size	Conductor Size	Current Capacity
2410	2@ 3/32, 8@ 1/8	16 AWG	7A
2412	3/32	16 AWG	7A
2420	1/16	18 AWG (16 AWG)	5A (7A)

ITEM No.	QTY.	PART No.	DESCRIPTION	MATERIAL
8	1		CABLE	
7	--		TAIL MOULD	NEOPRENE
6	--	55-00-00-1011	#16 SOCKET CONTACT	BRASS
6	--	55-00-00-1009	#12 SOCKET CONTACT	BRASS
6	--	55-00-00-1023	#10 SOCKET CONTACT	BRASS
5	--		CONNECTOR BODY	NEOPRENE
4	1	WST-131-PA-S16	SPIRAL RETAINING RING	316 St. St.
3	2	55-00-24-1055	THRUST WASHER	BLACK ACETAL
2	1	55-06-24-1050	PLUG BODY	316L St. St.
1	1	55-00-24-1054	ENGAGING NUT	316L St. St.

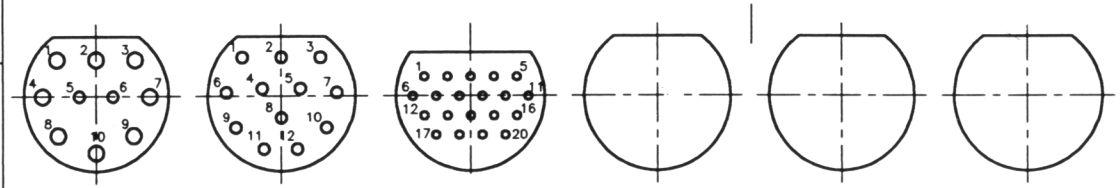

VIEW ON CONNECTOR FRONT FACE

SURFACE FINISH	UNLESS OTHERWISE SPECIFIED DIMENSIONS ARE IN INCHES TOLERANCES ARE: DECIMALS ANGLES	MATERIAL/SPECIFICATION	TITLE
SCALE: 1 : 1		----------	SIZE 24 ATTACHABLE PLUG CONNECTOR MOULDED "RIGHT ANGLE" GENERAL ARRANGEMENT
SIZE: A3			

DJH			23-1-96	
DRAWN	CHECKED	APPROVED	DATE	REV. REF. No.
DRAWING No. 55-R1-24-1065			SHEET No. 1 OF 1	REV. No.
SERIES	STYLE	SIZE	NUMBER	

SEACON

SCS PART No.	CAD REF. No.	IF IN DOUBT ASK DO NOT SCALE
----------	C:\DWGS\SCS\1059_1_B.DWG	

THIS DOCUMENT IS PROPRIETARY AND CONFIDENTIAL TO SEA CONNECTIONS SYSTEMS Ltd. ANY INFORMATION CONTAINED HEREON, MAY NOT BE REPRODUCED AND/OR CONVEYED TO ANY THIRD PARTY etc., AND NO ARTICLE MAY BE MANUFACTURED AND/OR ASSEMBLED IN ACCORDANCE WITH THIS DRAWING WITHOUT THE PRIOR WRITTEN CONSENT OF SEA CONNECTIONS SYSTEMS Ltd. "ALL RIGHTS RESERVED" UNDER THE U.K. COPYRIGHT AND DESIGNS AND PATENTS ACT 1988.

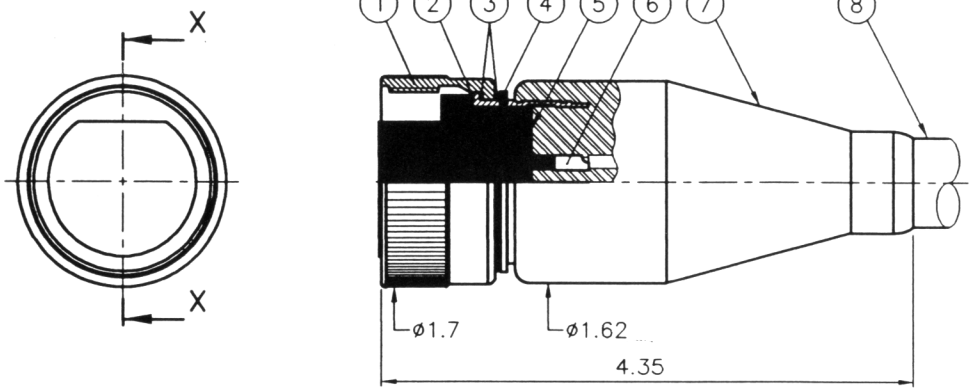

PART SECTION X–X

Part No.	Contact Size	Conductor Size	Current Capacity
2410	2@ 3/32, 8@ 1/8	16 AWG	7A
2412	3/32	16 AWG	7A
2420	1/16	18 AWG (16 AWG)	5A (7A)

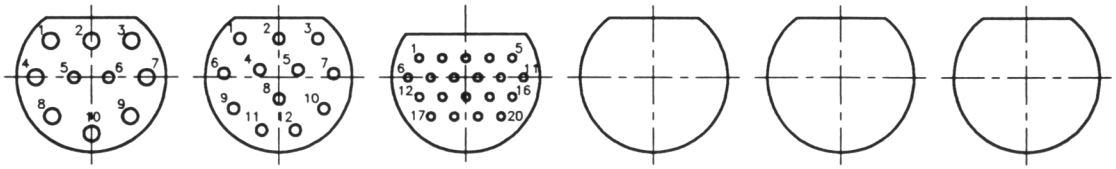

VIEW ON CONNECTOR FRONT FACE

ITEM No.	QTY.	PART No.	DESCRIPTION	MATERIAL
8	1		CABLE	
7	--		TAIL MOULD	NEOPRENE
6	--	55-00-00-1011	#16 SOCKET CONTACT	BRASS
6	--	55-00-00-1009	#12 SOCKET CONTACT	BRASS
6	--	55-00-00-1023	#10 SOCKET CONTACT	BRASS
5	--		CONNECTOR BODY	NEOPRENE
4	1	WST-131-PA-S16	SPIRAL RETAINING RING	316 St. St.
3	2	55-00-24-1055	THRUST WASHER	BLACK ACETAL
2	1	55-06-24-1050	PLUG BODY	316L St. St.
1	1	55-00-24-1054	ENGAGING NUT	316L St. St.

SURFACE FINISH	UNLESS OTHERWISE SPECIFIED DIMENSIONS ARE IN INCHES TOLERANCES ARE: DECIMALS / ANGLES	MATERIAL/SPECIFICATION	TITLE
SCALE: 1 : 1		----------	SIZE 24 ATTACHABLE PLUG CONNECTOR MOULDED "STRAIGHT" GENERAL ARRANGEMENT
SIZE: A3			

DJH			23-1-96	———
DRAWN	CHECKED	APPROVED	DATE	REV. REF. No.
DRAWING No. 55-01-24-1059			SHEET No. 1 OF 1	REV. No.
SERIES	STYLE	SIZE	NUMBER	

SEACON

C

55-28

SCS PART No.	CAD REF. No.	IF IN DOUBT ASK DO NOT SCALE
----------	C:\DWGS\SCS\1066_1_B.DWG	

THIS DOCUMENT IS PROPRIETARY AND CONFIDENTIAL TO SEA CONNECTIONS SYSTEMS Ltd. ANY INFORMATION CONTAINED HEREON, MAY NOT BE REPRODUCED AND/OR CONVEYED TO ANY THIRD PARTY etc., AND NO ARTICLE MAY BE MANUFACTURED AND/OR ASSEMBLED IN ACCORDANCE WITH THIS DRAWING WITHOUT THE PRIOR WRITTEN CONSENT OF SEA CONNECTIONS SYSTEMS Ltd. "ALL RIGHTS RESERVED" UNDER THE U.K. COPYRIGHT AND DESIGNS AND PATENTS ACT 1988.

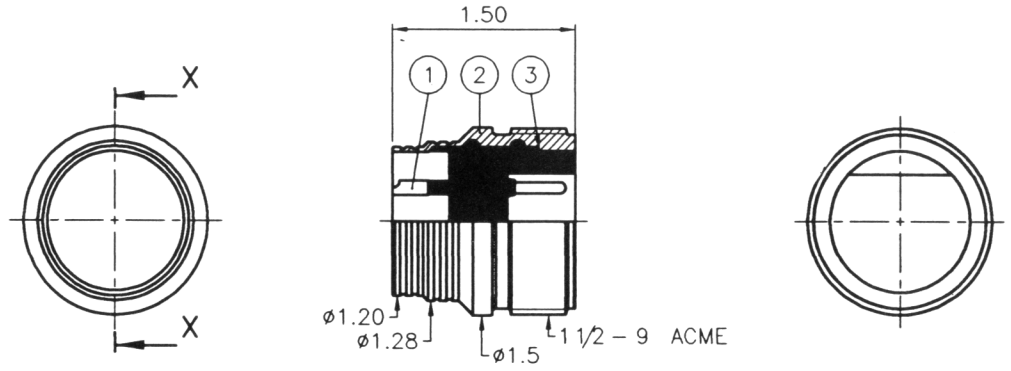

PART SECTION X–X

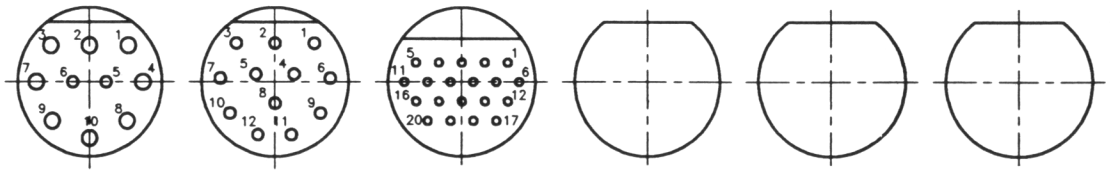

VIEW ON CONNECTOR FRONT FACE

Part No.	Contact Size	Conductor Size	Current Capacity
2410	2@ 3/32, 8@ 1/8	16 AWG	7A
2412	3/32	16 AWG	7A
2420	1/16	18 AWG (16 AWG)	5A (7A)

ITEM No.	QTY.	PART No.	DESCRIPTION	MATERIAL
3	--		CONNECTOR BODY	NEOPRENE
2	1	55-A2-20-1053	RECEPTACLE BODY	316L St. St.
1	--	55-00-00-1013	#16 PIN CONTACT	BRASS
1	--	55-00-00-1012	#12 PIN CONTACT	BRASS
1	--	55-00-00-1025	#10 PIN CONTACT	BRASS

SURFACE FINISH	UNLESS OTHERWISE SPECIFIED DIMENSIONS ARE IN INCHES TOLERANCES ARE: DECIMALS / ANGLES	MATERIAL/SPECIFICATION	TITLE
SCALE: 1 : 1		----------	SIZE 24 ATTACHABLE RECEPTACLE CONNECTOR GENERAL ARRANGEMENT
SIZE: A3			

DJH			23-1-96	
DRAWN	CHECKED	APPROVED	DATE	REV. REF. No.
DRAWING No. 55-A2-24-1066			SHEET No. 1 OF 1	REV. No.
SERIES	STYLE	SIZE	NUMBER	

55-29

SCS PART No.	CAD REF. No.	IF IN DOUBT ASK DO NOT SCALE	
----------	C:\DWGS\SCS\1063_1_B.DWG		

THIS DOCUMENT IS PROPRIETARY AND CONFIDENTIAL TO SEA CONNECTIONS SYSTEMS Ltd. ANY INFORMATION CONTAINED HEREON, MAY NOT BE REPRODUCED AND/OR CONVEYED TO ANY THIRD PARTY etc., AND NO ARTICLE MAY BE MANUFACTURED AND/OR ASSEMBLED IN ACCORDANCE WITH THIS DRAWING WITHOUT THE PRIOR WRITTEN CONSENT OF SEA CONNECTIONS SYSTEMS Ltd. "ALL RIGHTS RESERVED" UNDER THE U.K. COPYRIGHT AND DESIGNS AND PATENTS ACT 1988.

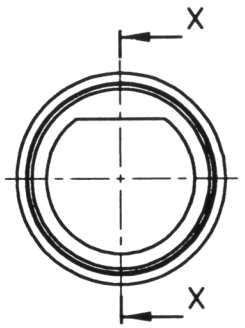

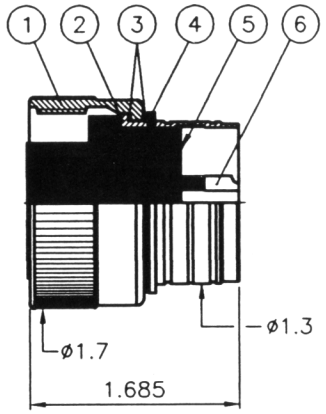

PART SECTION X–X

Part No.	Contact Size	Conductor Size	Current Capacity
2410	2@ 3/32, 8@ 1/8	16 AWG	7A
2412	3/32	16 AWG	7A
2420	1/16	18 AWG (16 AWG)	5A (7A)

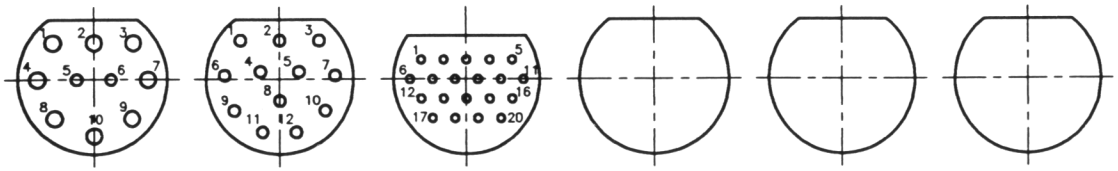

55A1–2410 55A1–2412 55A1-2420 55A1–24** 55A1–24** 55A!–24**

VIEW ON CONNECTOR FRONT FACE

ITEM No.	QTY.	PART No.	DESCRIPTION	MATERIAL
6	--	55–00–00–1011	#16 SOCKET CONTACT	BRASS
6	--	55–00–00–1009	#12 SOCKET CONTACT	BRASS
6	--	55–00–00–1023	#10 SOCKET CONTACT	BRASS
5	--		CONNECTOR BODY	NEOPRENE
4	1	WST–131–PA–S16	SPIRAL RETAINING RING	316 St. St.
3	2	55–00–24–1055	THRUST WASHER	BLACK ACETAL
2	1	55–06–24–1050	PLUG BODY	316L St. St.
1	1	55–00–24–1054	ENGAGING NUT	316L St. St.

SURFACE FINISH	UNLESS OTHERWISE SPECIFIED DIMENSIONS ARE IN INCHES TOLERANCES ARE: DECIMALS ANGLES	MATERIAL/SPECIFICATION	TITLE
SCALE:1:1		----------	SIZE 24 ATTACHABLE PLUG CONNECTOR GENERAL ARRANGEMENT
SIZE: A3			

DJH			23–1–96	———
DRAWN	CHECKED	APPROVED	DATE	REV. REF. No.
DRAWING No. 55–A1–24–1063			SHEET No. 1 OF 1	REV. No.
SERIES	STYLE	SIZE	NUMBER	

55-30

SCS PART No.	CAD REF. No.	IF IN DOUBT ASK DO NOT SCALE	
----------	C:\DWGS\SCS\1080_1_A.DWG		

THIS DOCUMENT IS PROPRIETARY AND CONFIDENTIAL TO SEA CONNECTIONS SYSTEMS Ltd. ANY INFORMATION CONTAINED HEREON, MAY NOT BE REPRODUCED AND/OR CONVEYED TO ANY THIRD PARTY etc., AND NO ARTICLE MAY BE MANUFACTURED AND/OR ASSEMBLED IN ACCORDANCE WITH THIS DRAWING WITHOUT THE PRIOR WRITTEN CONSENT OF SEA CONNECTIONS SYSTEMS Ltd. "ALL RIGHTS RESERVED" UNDER THE U.K. COPYRIGHT AND DESIGNS AND PATENTS ACT 1988.

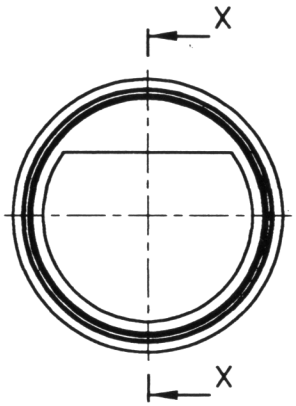

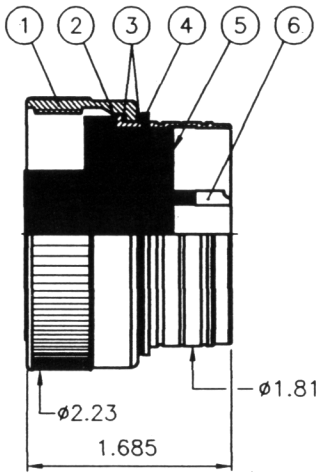

PART SECTION X–X

Part No.	*Contact Size*	*Conductor Size*	*Current Capacity*
3210	5/32	16 awg	7A
3212	5/32	16 awg	7A
3216	5@1/8, 11@3/32	16 awg	7A
3221	4@5/32, 8@1/8, 9@3/32	18 awg (16 awg)	5A (7A)
3224	6@1/8, 18@3/32	18 awg (16 awg)	5A (7A)

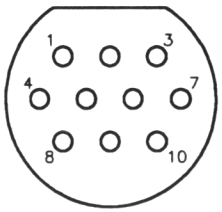

55A1-3210

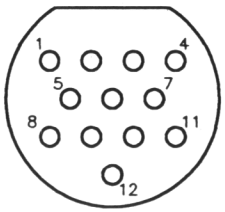

55A1-3212

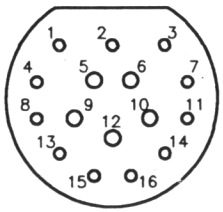

55A1-3216

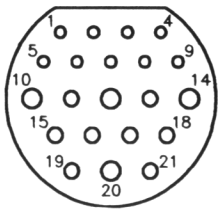

55A1-3221

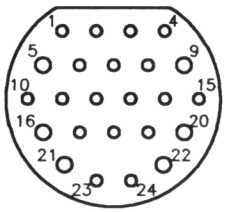

55A1-3224

VIEW ON CONNECTOR FRONT FACE

ITEM No.	QTY.	PART No.	DESCRIPTION	MATERIAL
6	--	55-00-00-1011	#16 SOCKET CONTACT	BRASS
6	--	55-00-00-1009	#12 SOCKET CONTACT	BRASS
6	--	55-00-00-1023	#10 SOCKET CONTACT	BRASS
6	--	55-00-00-1031	#8 SOCKET CONTACT	BRASS
5	--		CONNECTOR BODY	NEOPRENE
4	1	WST-175-PA-S16	SPIRAL RETAINING RING	316 St. St.
3	2	55-00-32-1075	THRUST WASHER	BLACK ACETAL
2	1	55-00-32-1070	PLUG BODY	316L St. St.
1	1	55-00-32-1074	ENGAGING NUT	316L St. St.

SURFACE FINISH	UNLESS OTHERWISE SPECIFIED DIMENSIONS ARE IN INCHES TOLERANCES ARE: DECIMALS / ANGLES	MATERIAL/SPECIFICATION	TITLE
SCALE: 1 : 1		----------	SIZE 32 ATTACHABLE PLUG CONNECTOR GENERAL ARRANGEMENT
SIZE: A3			

DJH			23-1-96	
DRAWN	CHECKED	APPROVED	DATE	REV. REF. No.
DRAWING No. 55-A1-32-1080			SHEET No. 1 OF 1	REV. No.
SERIES	STYLE	SIZE	NUMBER	

55-31

SEACON

C

SCS PART No.	CAD REF. No.	IF IN DOUBT ASK DO NOT SCALE
----------	C:\DWGS\SCS\1086_1_B.DWG	

THIS DOCUMENT IS PROPRIETARY AND CONFIDENTIAL TO SEA CONNECTIONS SYSTEMS Ltd. ANY INFORMATION CONTAINED HEREON, MAY NOT BE REPRODUCED AND/OR CONVEYED TO ANY THIRD PARTY etc., AND NO ARTICLE MAY BE MANUFACTURED AND/OR ASSEMBLED IN ACCORDANCE WITH THIS DRAWING WITHOUT THE PRIOR WRITTEN CONSENT OF SEA CONNECTIONS SYSTEMS Ltd. "ALL RIGHTS RESERVED" UNDER THE U.K. COPYRIGHT AND DESIGNS AND PATENTS ACT 1988.

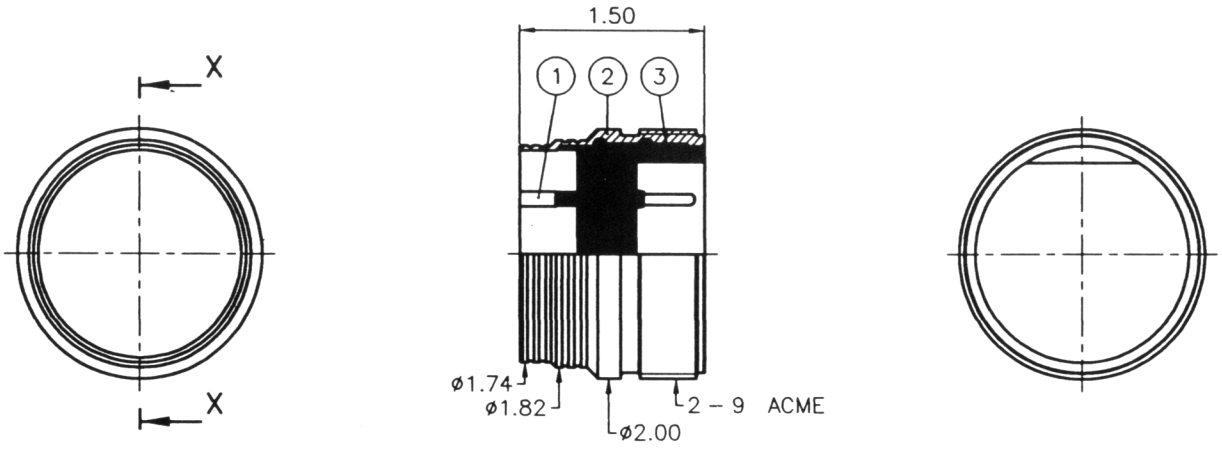

PART SECTION X–X

Part No.	*Contact Size*	*Conductor Size*	*Current Capacity*
3210	5/32	16 awg	7A
3212	5/32	16 awg	7A
3216	5@1/8, 11@3/32	16 awg	7A
3221	4@5/32, 8@1/8, 9@3/32	18 awg (16 awg)	5A (7A)
3224	6@1/8, 18@3/32	18 awg (16 awg)	5A (7A)

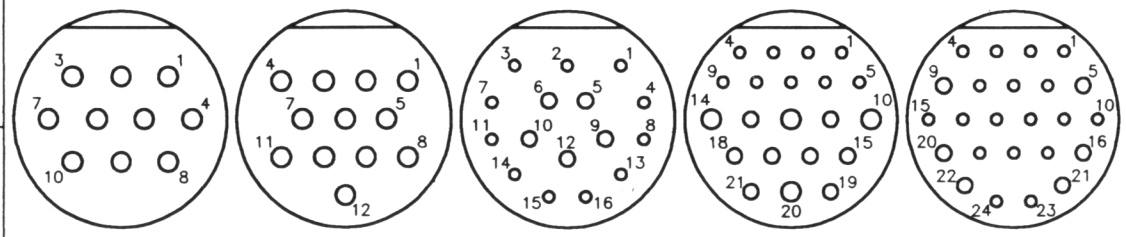

VIEW ON CONNECTOR FRONT FACE

ITEM No.	QTY.	PART No.	DESCRIPTION	MATERIAL
3	--		CONNECTOR BODY	NEOPRENE
2	1	55-A2-20-1053	RECEPTACLE BODY	316L St. St.
1	--	55-00-00-1013	#16 PIN CONTACT	BRASS
1	--	55-00-00-1012	#12 PIN CONTACT	BRASS
1	--	55-00-00-1025	#10 PIN CONTACT	BRASS
1	--	55-00-00-1033	#8 PIN CONTACT	BRASS

SURFACE FINISH	UNLESS OTHERWISE SPECIFIED DIMENSIONS ARE IN INCHES TOLERANCES ARE: DECIMALS / ANGLES	MATERIAL/SPECIFICATION	TITLE
SCALE: 1 : 1		----------	SIZE 32 ATTACHABLE RECEPTACLE CONNECTOR GENERAL ARRANGEMENT
SIZE: A3			

DJH			23-3-96	———
DRAWN	CHECKED	APPROVED	DATE	REV. REF. No.
DRAWING No. 55-A2-32-1086			SHEET No. 1 OF 1	REV. No.
SERIES	STYLE	SIZE	NUMBER	

SEACON C

55-32

SCS PART No.	CAD REF. No.	IF IN DOUBT ASK DO NOT SCALE
----------	C:\DWGS\SCS\1085_1_A.DWG	

THIS DOCUMENT IS PROPRIETARY AND CONFIDENTIAL TO SEA CONNECTIONS SYSTEMS Ltd. ANY INFORMATION CONTAINED HEREIN, MAY NOT BE REPRODUCED AND/OR CONVEYED TO ANY THIRD PARTY etc., AND NO ARTICLE MAY BE MANUFACTURED AND/OR ASSEMBLED IN ACCORDANCE WITH THIS DRAWING WITHOUT THE PRIOR WRITTEN CONSENT OF SEA CONNECTIONS SYSTEMS Ltd. "ALL RIGHTS RESERVED" UNDER THE U.K. COPYRIGHT AND DESIGNS AND PATENTS ACT 1988.

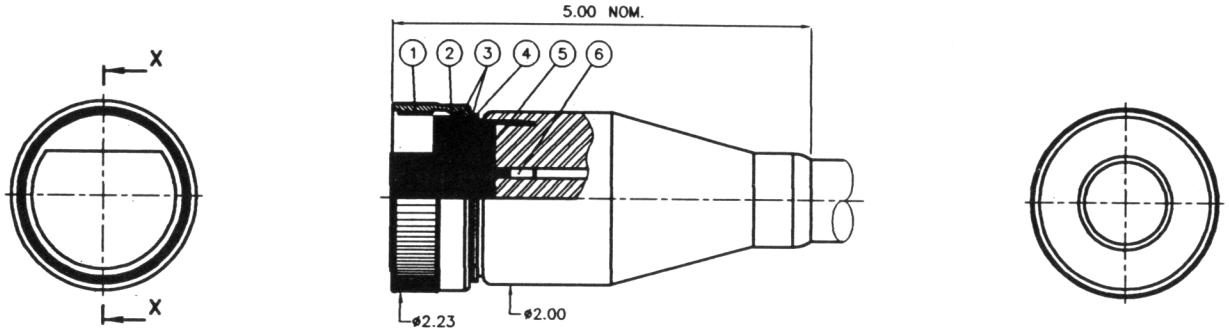

PART SECTION X–X

Part No.	*Contact Size*	*Conductor Size*	*Current Capacity*
3210	5/32	16 awg	7A
3212	5/32	16 awg	7A
3216	5@1/8, 11@3/32	16 awg	7A
3221	4@5/32, 8@1/8, 9@3/32	18 awg (16 awg)	5A (7A)
3224	6@1/8, 18@3/32	18 awg (16 awg)	5A (7A)

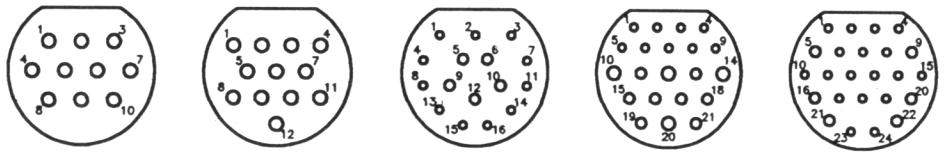

5501-3210 5501-3212 5501-3216 55R2-3221 55R2-3224

VIEW ON CONNECTOR FRONT FACE

ITEM No.	QTY.	PART No.	DESCRIPTION	MATERIAL
8	--		CABLE	
7	--		TAIL MOULD	NEOPRENE
6	--	55-00-00-1011	#16 SOCKET CONTACT	BRASS
6	--	55-00-00-1009	#12 SOCKET CONTACT	BRASS
6	--	55-00-00-1023	#10 SOCKET CONTACT	BRASS
6	--	55-00-00-1031	#8 SOCKET CONTACT	BRASS
5	--		CONNECTOR BODY	NEOPRENE
4	1	MST-175-PA-S16	SPIRAL RETAINING RING	316 St. St.
3	2	55-00-32-1075	THRUST WASHER	BLACK ACETAL
2	1	55-00-32-1070	PLUG BODY	316L St. St.
1	1	55-00-32-1074	ENGAGING NUT	316L St. St.

SURFACE FINISH	UNLESS OTHERWISE SPECIFIED DIMENSIONS ARE IN INCHES TOLERANCES ARE: DECIMALS ANGLES	MATERIAL/SPECIFICATION	TITLE
SCALE: 1 : 1		----------	SIZE 32 ATTACHABLE PLUG CONNECTOR MOULDED "STRAIGHT" GENERAL ARRANGEMENT
SIZE: A2			

DJH			15-10-96	
DRAWN	CHECKED	APPROVED	DATE	REV. REF. No.
DRAWING No. 55-01-32-1085			SHEET No. 1 OF 1	REV. No.
SERIES	STYLE	SIZE	NUMBER	

SEA CON

SCS PART No.	CAD REF. No.	IF IN DOUBT ASK DO NOT SCALE
----------	C:\DWGS\SCS\1084_1_A.DWG	

THIS DOCUMENT IS PROPRIETARY AND CONFIDENTIAL TO SEA CONNECTORS SYSTEMS Ltd. ANY INFORMATION CONTAINED HEREIN, MAY NOT BE REPRODUCED AND/OR CONVEYED TO ANY THIRD PARTY etc., AND NO ARTICLE MAY BE MANUFACTURED AND/OR ASSEMBLED IN ACCORDANCE WITH THIS DRAWING WITHOUT THE PRIOR WRITTEN CONSENT OF SEA CONNECTORS SYSTEMS Ltd. "ALL RIGHTS RESERVED" UNDER THE U.K. COPYRIGHT AND DESIGNS AND PATENTS ACT 1988.

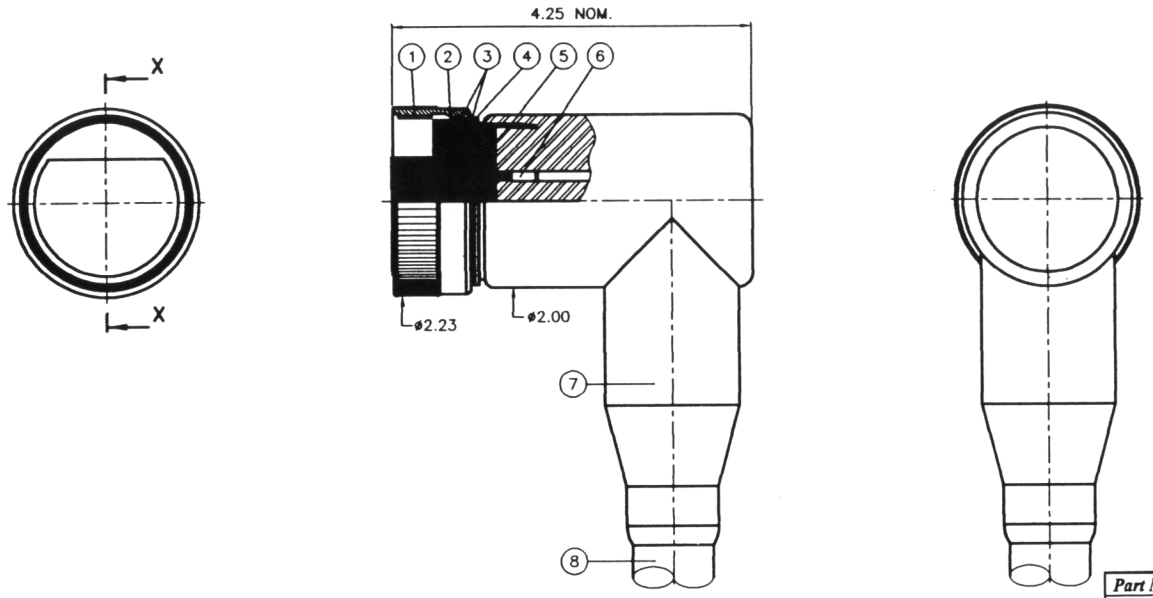

PART SECTION X–X

Part No.	Contact Size	Conductor Size	Current Capacity
3210	5/32	16 awg	7A
3212	5/32	16 awg	7A
3216	5@1/8, 11@3/32	16 awg	7A
3221	4@5/32, 8@1/8, 9@3/32	18 awg (16 awg)	5A (7A)
3224	6@1/8, 18@3/32	18 awg (16 awg)	5A (7A)

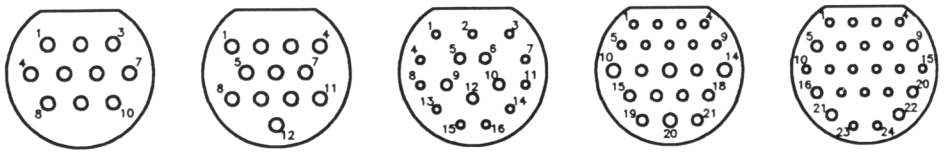

55R1-3210 55R1-3212 55R1-3216 55R1-3221 55R1-3224

VIEW ON CONNECTOR FRONT FACE

ITEM No.	QTY.	PART No.	DESCRIPTION	MATERIAL
8	--		CABLE	
7	--		TAIL MOULD	NEOPRENE
6	--	55-00-00-1011	#16 SOCKET CONTACT	BRASS
6	--	55-00-00-1009	#12 SOCKET CONTACT	BRASS
6	--	55-00-00-1023	#10 SOCKET CONTACT	BRASS
6	--	55-00-00-1031	#8 SOCKET CONTACT	BRASS
5	--		CONNECTOR BODY	NEOPRENE
4	1	WST-175-PA-S16	SPIRAL RETAINING RING	316 St. St.
3	2	55-00-32-1075	THRUST WASHER	BLACK ACETAL
2	1	55-00-32-1070	PLUG BODY	316L St. St.
1	1	55-00-32-1074	ENGAGING NUT	316L St. St.

SURFACE FINISH	UNLESS OTHERWISE SPECIFIED DIMENSIONS ARE IN INCHES TOLERANCES ARE: DECIMALS ANGLES	MATERIAL/SPECIFICATION	TITLE
SCALE: 1 : 1		----------	SIZE 32 ATTACHABLE PLUG CONNECTOR MOULDED "RIGHT ANGLE" GENERAL ARRANGEMENT
SIZE: A2			

DJH			15-10-96	
DRAWN	CHECKED	APPROVED	DATE	REV. REF. No.
DRAWING No. 55-R1-32-1084			SHEET No. 1 OF 1	REV. No.
SERIES	STYLE	SIZE	NUMBER	

SCS PART No.	CAD REF. No.	IF IN DOUBT ASK DO NOT SCALE
----------	C:\DWGS\SCS\1081_1_A.DWG	

THIS DOCUMENT IS PROPRIETARY AND CONFIDENTIAL TO SEA CONNECTRONICS SYSTEMS Ltd. ANY INFORMATION CONTAINED HEREIN, MAY NOT BE REPRODUCED AND/OR CONNECTED TO ANY THIRD PARTY etc., AND NO ARTICLE MAY BE MANUFACTURED AND/OR ASSEMBLED IN ACCORDANCE WITH THIS DRAWING WITHOUT THE PRIOR WRITTEN CONSENT OF SEA CONNECTRONICS SYSTEMS Ltd. "ALL RIGHTS RESERVED" UNDER THE U.K. COPYRIGHT AND DESIGNS AND PATENTS ACT 1988.

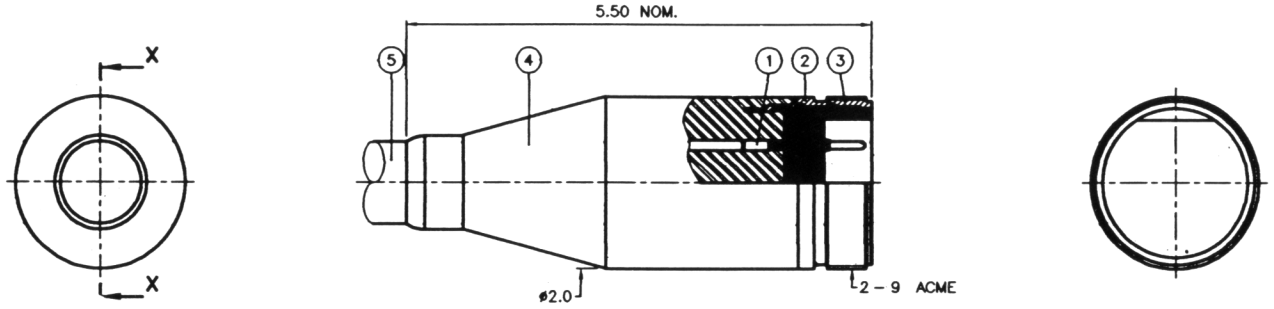

PART SECTION X–X

Part No.	*Contact Size*	*Conductor Size*	*Current Capacity*
3210	5/32	16 awg	7A
3212	5/32	16 awg	7A
3216	5@1/8, 11@3/32	16 awg	7A
3221	4@5/32, 8@1/8, 9@3/32	18 awg (16 awg)	5A (7A)
3224	6@1/8, 18@3/32	18 awg (16 awg)	5A (7A)

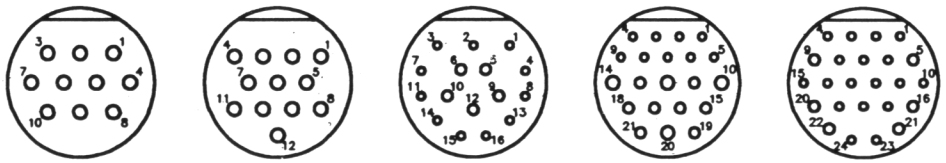

VIEW ON CONNECTOR FRONT FACE

ITEM No.	QTY.	PART No.	DESCRIPTION	MATERIAL
5	---		CABLE	
4	---		TAIL MOULD	NEOPRENE
3	---		CONNECTOR BODY	NEOPRENE
2	1	55-A2-20-1053	RECEPTACLE BODY	316L St. St.
1	---	55-00-00-1013	#16 PIN CONTACT	BRASS
1	---	55-00-00-1012	#12 PIN CONTACT	BRASS
1	---	55-00-00-1025	#10 PIN CONTACT	BRASS
1	---	55-00-00-1033	#8 PIN CONTACT	BRASS

SURFACE FINISH	UNLESS OTHERWISE SPECIFIED DIMENSIONS ARE IN INCHES TOLERANCES ARE: DECIMALS / ANGLES	MATERIAL/SPECIFICATION	TITLE
SCALE: 1 : 1		----------	SIZE 32 ATTACHABLE RECEPTACLE CONNECTOR MOULDED "STRAIGHT" GENERAL ARRANGEMENT
SIZE: A2			

DJH			25-10-95	———
DRAWN	CHECKED	APPROVED	DATE	REV. REF. No.

DRAWING No.				SHEET No.	REV. No.
55-02-32-1081				1 OF 1	
SERIES	STYLE	SIZE	NUMBER		

SCS PART No.	CAD REF. No.	IF IN DOUBT ASK DO NOT SCALE
----------	C:\DWGS\SCS\1087_1_A.DWG	

THIS DOCUMENT IS PROPRIETARY AND CONFIDENTIAL TO SEA CONNECTORS SUSSEX Ltd. ANY INFORMATION CONTAINED HEREIN, MAY NOT BE REPRODUCED AND/OR CONVEYED TO ANY THIRD PARTY etc., AND NO ARTICLE MAY BE MANUFACTURED AND/OR ASSEMBLED IN ACCORDANCE WITH THIS DRAWING WITHOUT THE PRIOR WRITTEN CONSENT OF SEA CONNECTORS SUSSEX Ltd. "ALL RIGHTS RESERVED" UNDER THE U.K. COPYRIGHT AND DESIGNS AND PATENTS ACT 1988.

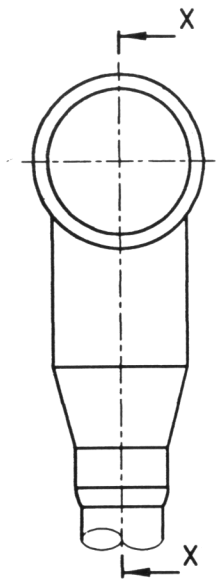

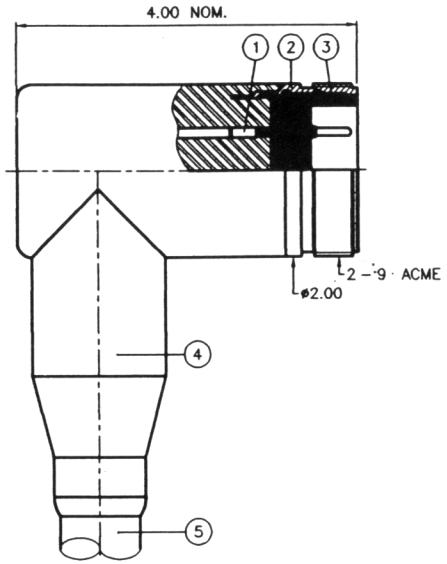

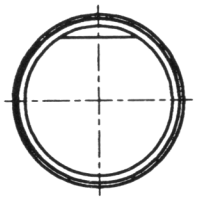

PART SECTION X–X

Part No.	*Contact Size*	*Conductor Size*	*Current Capacity*
3210	5/32	16 awg	7A
3212	5/32	16 awg	7A
3216	5@1/8, 11@3/32	16 awg	7A
3221	4@5/32, 8@1/8, 9@3/32	18 awg (16 awg)	5A (7A)
3224	6@1/8, 18@3/32	18 awg (16 awg)	5A (7A)

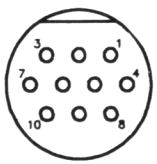
55R2-3210

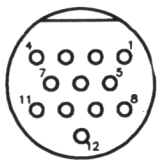
55R2-3212

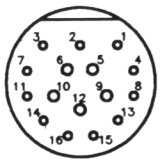
55R2-3216

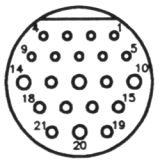
55R2-3221

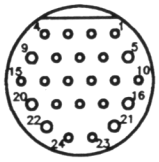
55R2-3224

VIEW ON CONNECTOR FRONT FACE

ITEM No.	QTY.	PART No.	DESCRIPTION	MATERIAL
5	--		CABLE	
4	--		TAIL MOULD	NEOPRENE
3	--		CONNECTOR BODY	NEOPRENE
2	1	55-A2-20-1053	RECEPTACLE BODY	316L St. St.
1	--	55-00-00-1013	#16 PIN CONTACT	BRASS
1	--	55-00-00-1012	#12 PIN CONTACT	BRASS
1	--	55-00-00-1025	#10 PIN CONTACT	BRASS
1	--	55-00-00-1033	#8 PIN CONTACT	BRASS

SURFACE FINISH	UNLESS OTHERWISE SPECIFIED DIMENSIONS ARE IN INCHES TOLERANCES ARE: DECIMALS ANGLES	MATERIAL/SPECIFICATION	TITLE	DJH			25-10-95	
SCALE: 1 : 1		----------	SIZE 32 ATTACHABLE RECEPTACLE CONNECTOR MOULDED "RIGHT ANGLE" GENERAL ARRANGEMENT	DRAWN	CHECKED	APPROVED	DATE	REV. REF. No.
SIZE: A2				DRAWING No. 55-R2-32-1087 SERIES STYLE SIZE NUMBER			SHEET No. 1 OF 1	REV. No.

SEA CON

C

SCS PART No.	CAD REF. No.	IF IN DOUBT ASK DO NOT SCALE
----------	C:\DWGS\SCS\1082_1_B.DWG	

THIS DOCUMENT IS PROPRIETARY AND CONFIDENTIAL TO SEA CONNECTIONS SYSTEMS Ltd. ANY INFORMATION CONTAINED HEREON, MAY NOT BE REPRODUCED AND/OR CONVEYED TO ANY THIRD PARTY etc., AND NO ARTICLE MAY BE MANUFACTURED AND/OR ASSEMBLED IN ACCORDANCE WITH THIS DRAWING WITHOUT THE PRIOR WRITTEN CONSENT OF SEA CONNECTIONS SYSTEMS Ltd. "ALL RIGHTS RESERVED" UNDER THE U.K. COPYRIGHT AND DESIGNS AND PATENTS ACT 1988.

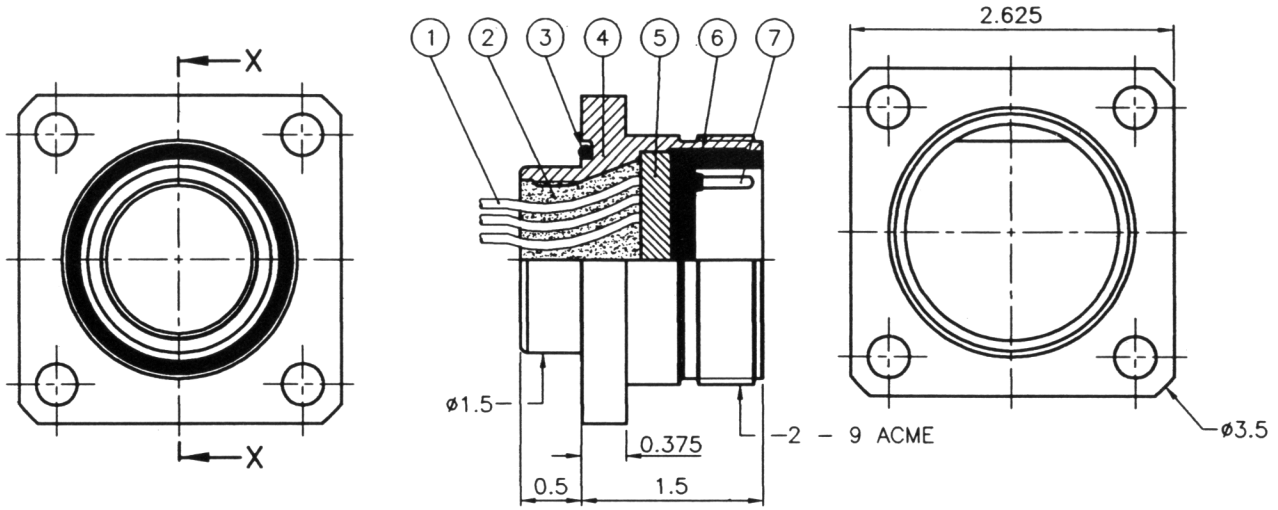

PART SECTION X–X

Part No.	Contact Size	Conductor Size	Current Capacity
3210	5/32	16 awg	7A
3212	5/32	16 awg	7A
3216	5@1/8, 11@3/32	16 awg	7A
3221	4@5/32, 8@1/8, 9@3/32	18 awg (16 awg)	5A (7A)
3224	6@1/8, 18@3/32	18 awg (16 awg)	5A (7A)

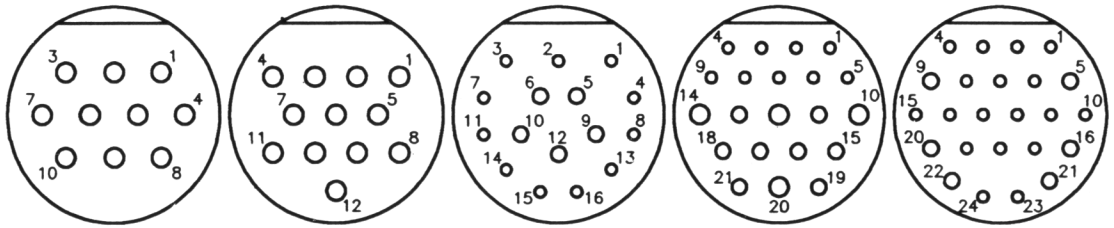

5506-3210 5506-3212 5506-3216 5506-3221 5506-3224

VIEW ON CONNECTOR FRONT FACE

ITEM No.	QTY.	PART No.	DESCRIPTION	MATERIAL
7	--	55-00-00-1010	#16 PIN CONTACT	BRASS
7	--	55-00-00-1008	#12 PIN CONTACT	BRASS
7	--	55-00-00-1025	#10 PIN CONTACT	BRASS
7	--	55-00-00-1032	#8 PIN CONTACT	BRASS
6	--		CONNECTOR BODY	NEOPRENE
5	1	55-00-32-1076	JIG PLATE	EPOXY
4	1	55-07-32-1072	RECEPTACLE BODY	316 St. St.
3	2	BS1806-130	'O' SEAL	MED. NITRILE
2	1		FILLING COMPOUND	EPOXY
1	--		TAILING WIRE	PTFE INSULATED

SURFACE FINISH	UNLESS OTHERWISE SPECIFIED DIMENSIONS ARE IN INCHES TOLERANCES ARE: DECIMALS ANGLES	MATERIAL/SPECIFICATION	TITLE
SCALE: 1 : 1		---------	SIZE 32 PANEL MOUNT RECEPTACLE CONNECTOR GENERAL ARRANGEMENT
SIZE: A3			

DJH			22-3-96	· ———
DRAWN	CHECKED	APPROVED	DATE	REV. REF. No.
DRAWING No. 55-06-32-1082			SHEET No. 1 OF 1	REV. No.
SERIES	STYLE	SIZE NUMBER		

SCS PART No.	CAD REF. No.	IF IN DOUBT ASK DO NOT SCALE
----------	C:\DWGS\SCS\1083_1_B.DWG	

THIS DOCUMENT IS PROPRIETARY AND CONFIDENTIAL TO SEA CONNECTIONS SYSTEMS Ltd. ANY INFORMATION CONTAINED HEREON, MAY NOT BE REPRODUCED AND/OR CONVEYED TO ANY THIRD PARTY etc., AND NO ARTICLE MAY BE MANUFACTURED AND/OR ASSEMBLED IN ACCORDANCE WITH THIS DRAWING WITHOUT THE PRIOR WRITTEN CONSENT OF SEA CONNECTIONS SYSTEMS Ltd. "ALL RIGHTS RESERVED" UNDER THE U.K. COPYRIGHT AND DESIGNS AND PATENTS ACT 1988.

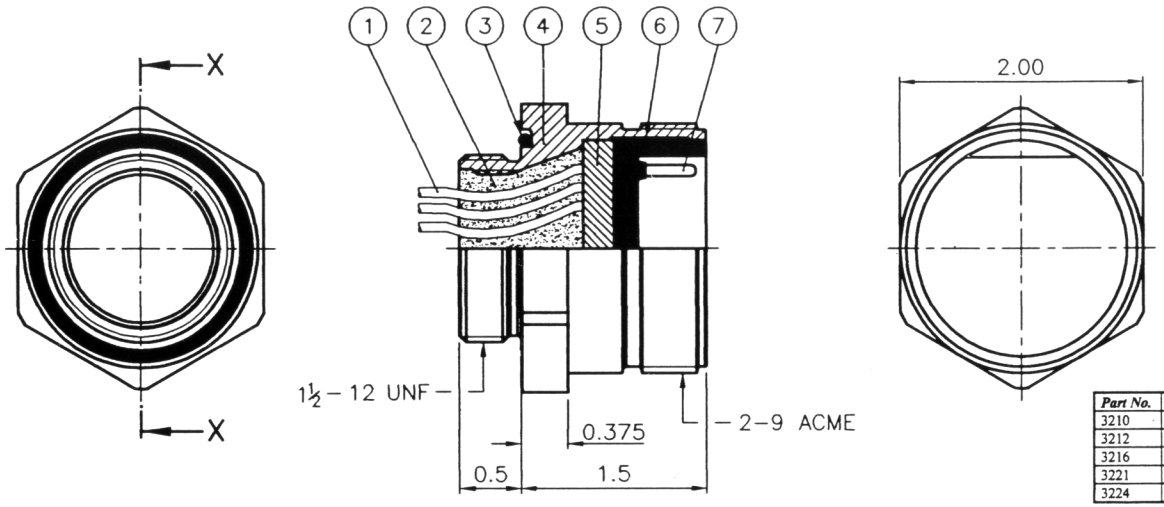

PART SECTION X–X

Part No.	Contact Size	Conductor Size	Current Capacity
3210	5/32	16 awg	7A
3212	5/32	16 awg	7A
3216	5@1/8, 11@3/32	16 awg	7A
3221	4@5/32, 8@1/8, 9@3/32	18 awg (16 awg)	5A (7A)
3224	6@1/8, 18@3/32	18 awg (16 awg)	5A (7A)

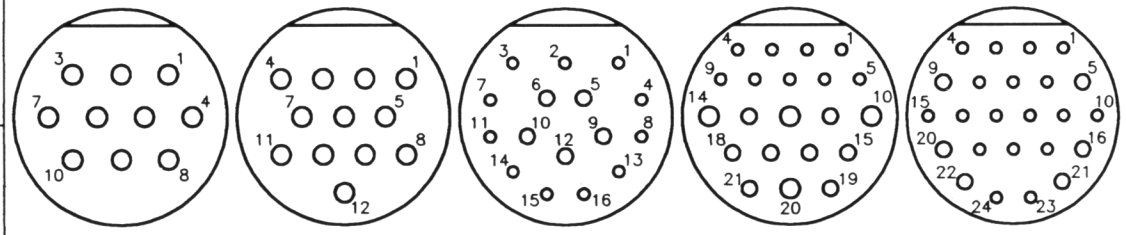

5507-3210 5507-3212 5507-3216 5507-3221 5507-3224

VIEW ON CONNECTOR FRONT FACE

ITEM No.	QTY.	PART No.	DESCRIPTION	MATERIAL
7	--	55-00-00-1010	#16 PIN CONTACT	BRASS
7	--	55-00-00-1008	#12 PIN CONTACT	BRASS
7	--	55-00-00-1025	#10 PIN CONTACT	BRASS
7	--	55-00-00-1032	#8 PIN CONTACT	BRASS
6	--		CONNECTOR BODY	NEOPRENE
5	1	55-00-32-1076	JIG PLATE	EPOXY
4	1	55-07-32-1071	RECEPTACLE BODY	316 St. St.
3	2	BS1806-130	'O' SEAL	MED. NITRILE
2	1		FILLING COMPOUND	EPOXY
1	--		TAILING WIRE	PTFE INSULATED

SURFACE FINISH	UNLESS OTHERWISE SPECIFIED DIMENSIONS ARE IN INCHES TOLERANCES ARE: DECIMALS ANGLES	MATERIAL/SPECIFICATION	TITLE
SCALE: 1 : 1		----------	SIZE 32 BULKHEAD RECEPTACLE CONNECTOR GENERAL ARRANGEMENT
SIZE: A3			

DJH			22-3-96	———
DRAWN	CHECKED	APPROVED	DATE	REV. REF. No.
DRAWING No. 55-07-32-1083			SHEET No. 1 OF 1	REV. No.
SERIES	STYLE	SIZE	NUMBER	

SCS PART No.	CAD REF. No.	IF IN DOUBT ASK DO NOT SCALE
----------	C:\DWGS\SCS\1027_1_A.DWG	

THIS DOCUMENT IS PROPRIETARY AND CONFIDENTIAL TO SEA CONNECTIONS SYSTEMS Ltd. ANY INFORMATION CONTAINED HEREON, MAY NOT BE REPRODUCED AND/OR CONVEYED TO ANY THIRD PARTY etc., AND NO ARTICLE MAY BE MANUFACTURED AND/OR ASSEMBLED IN ACCORDANCE WITH THIS DRAWING WITHOUT THE PRIOR WRITTEN CONSENT OF SEA CONNECTIONS SYSTEMS Ltd. "ALL RIGHTS RESERVED" UNDER THE U.K. COPYRIGHT AND DESIGNS AND PATENTS ACT 1988.

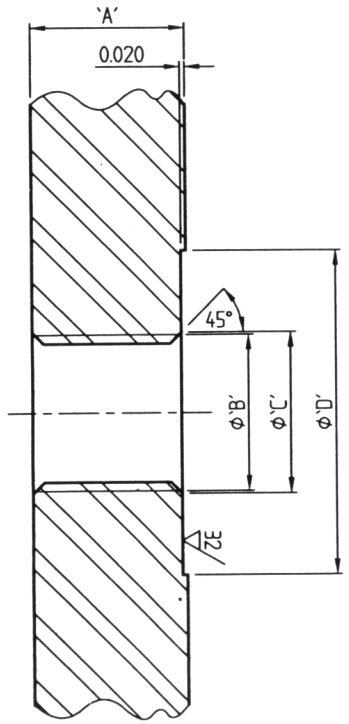

SECTION X–X

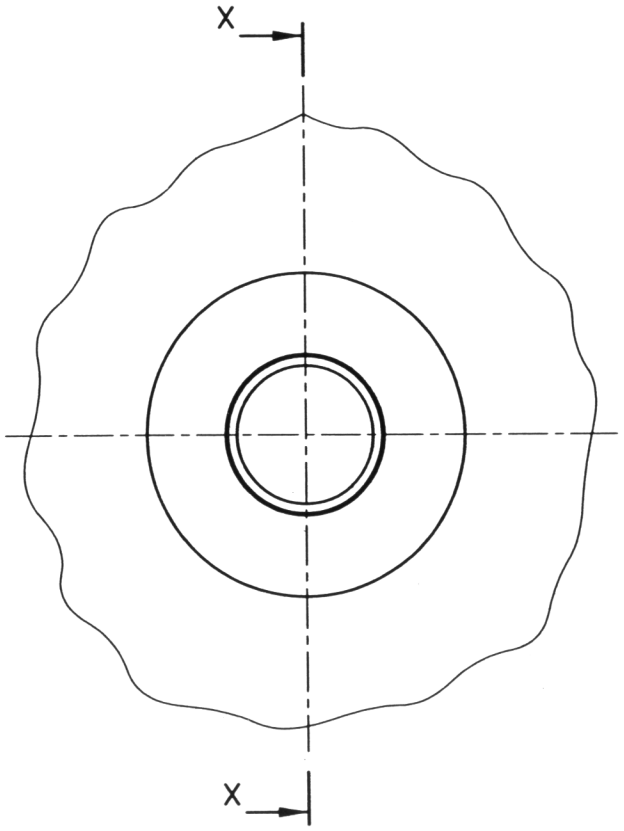

SHELL SIZE	'A'	ø'B'	ø'C'	ø'D'
15	0.500	5/8–18UNF	0.680	1.300
20	0.500	3/4–16UNF	0.790	1.440
24	0.500	1–14 UNS	1.050	1.730
32	0.500	1 1/2–12UNF	1.550	2.310

SURFACE FINISH	UNLESS OTHERWISE SPECIFIED DIMENSIONS ARE IN INCHES TOLERANCES ARE: DECIMALS / ANGLES	MATERIAL/SPECIFICATION	TITLE: SEA CON 55 SERIES — BULKHEAD RECEPTACLE CONNECTOR INTERFACE DETAIL
SCALE		----------	
SIZE: A3			

DJH			28–9–95	———
DRAWN	CHECKED	APPROVED	DATE	REV. REF. No.
DRAWING No. 55-07-00-1027			SHEET No. 1 OF 1	REV. No. A
SERIES	STYLE	SIZE	NUMBER	

SCS PART No.	CAD REF. No.	IF IN DOUBT ASK DO NOT SCALE
----------	C:\DWGS\SCS\1021_1_A.DWG	

THIS DOCUMENT IS PROPRIETARY AND CONFIDENTIAL TO SEA CONNECTIONS SYSTEMS Ltd. ANY INFORMATION CONTAINED HEREON, MAY NOT BE REPRODUCED AND/OR CONVEYED TO ANY THIRD PARTY etc., AND NO ARTICLE MAY BE MANUFACTURED AND/OR ASSEMBLED IN ACCORDANCE WITH THIS DRAWING WITHOUT THE PRIOR WRITTEN CONSENT OF SEA CONNECTIONS SYSTEMS Ltd. "ALL RIGHTS RESERVED" UNDER THE U.K. COPYRIGHT AND DESIGNS AND PATENTS ACT 1988.

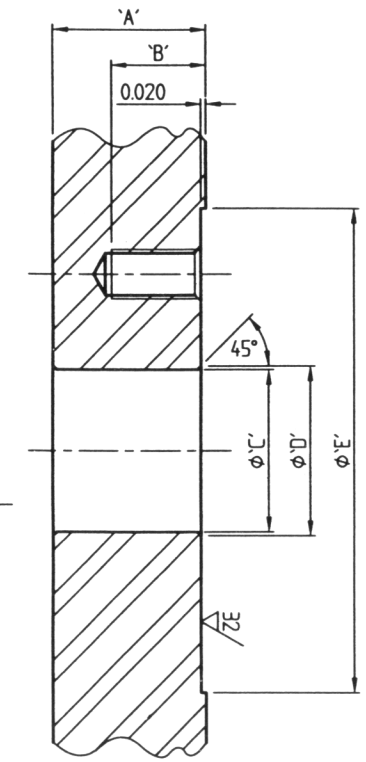

SECTION X–X

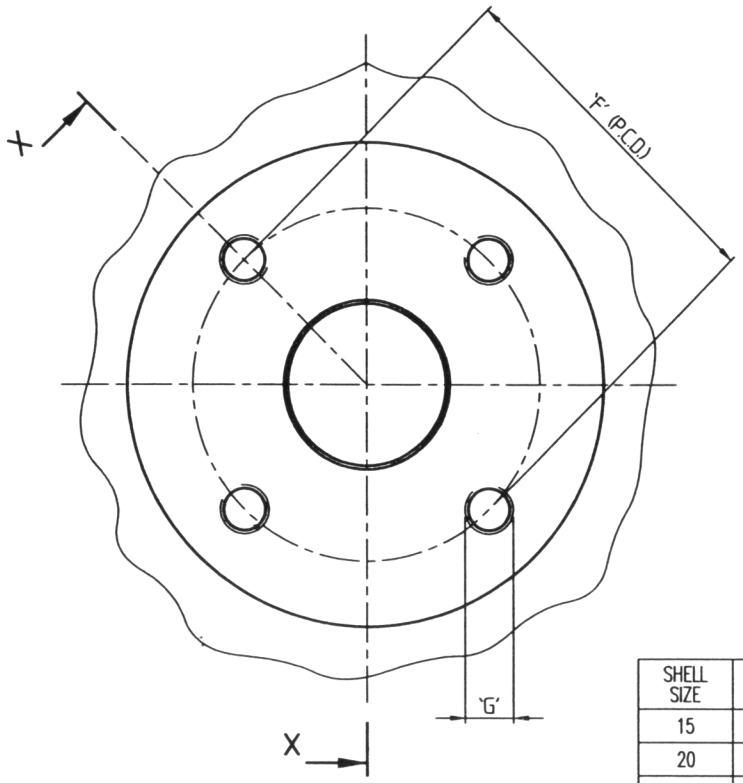

SHELL SIZE	'A'	'B'	ø'C'	ø'D'	ø'E'	'F'	'G'
15	0.450	0.315	0.650	0.680	1.940	1.414	M5
20	0.500	0.375	0.770	0.790	2.280	1.768	M6
24	0.500	0.375	1.020	1.040	2.630	2.121	M6
32	0.625	0.500	1.520	1.540	3.500	2.828	M8

SURFACE FINISH	UNLESS OTHERWISE SPECIFIED DIMENSIONS ARE IN INCHES TOLERANCES ARE: DECIMALS ANGLES	MATERIAL/SPECIFICATION	TITLE
SCALE:		----------	SEA CON 55 SERIES PANEL MOUNT RECEPTACLE CONNECTOR INTERFACE DETAIL
SIZE: A3			

DJH			28-9-95	
DRAWN	CHECKED	APPROVED	DATE	REV. REF. No.
DRAWING No. 55-06-00-1021			SHEET No. 1 OF 1	REV. No. A
SERIES	STYLE	SIZE	NUMBER	

55-40

METAL SHELL SERIES (MSS)

MSS-BCR

MSS-Bulkhead Connector Receptacle (Mates with MSS-CCP)

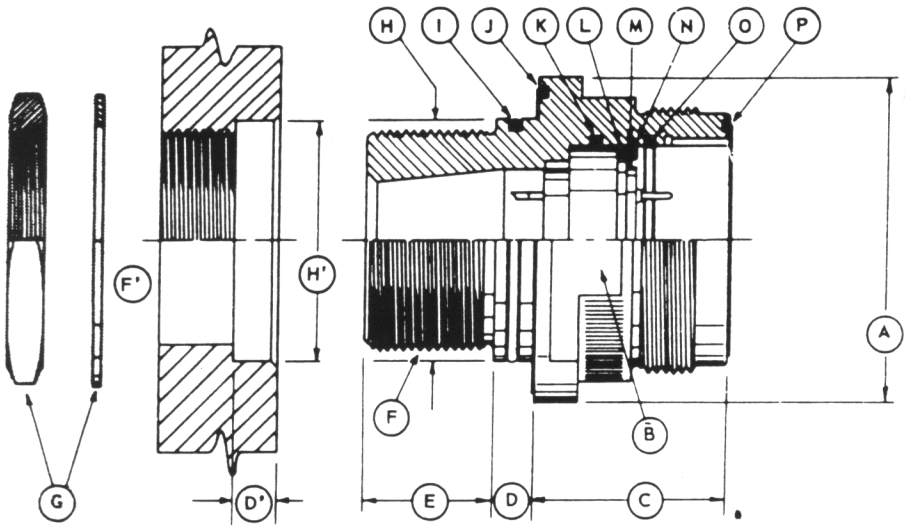

END VIEW-BCR

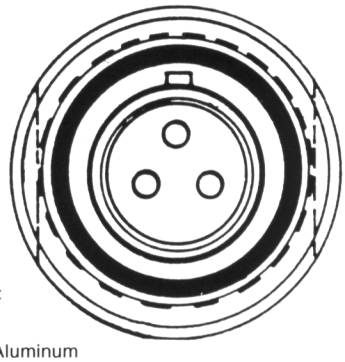

TYPICAL PART NUMBER EXPLANATION:

A - Aluminum
S - Stainless

TYPE CONNECTOR

SERIES

MSS-M22-BCR

SHELL SIZE

NO. OF CONTACTS

G, K, L, M sizes have round keyway. O, P and Q have square keyway. However, with the Aluminum option all sizes have a square keyway. Refer to page 60-5 and 60-6 for contact configurations. G,K,L,M Aluminum connectors will not mate with stainless steel connectors.

SHELL SIZE	G	K	L	M	O	P	Q
A - Diameter	1.37	1.87	2.12	2.75	3.50	3.75	4.50
B - Wrench Flats	1.18	1.62	1.88	2.25	2.75	3.00	3.62
C - Height	1.50	2.00	2.00	2.25	2.25	2.25	2.25
D - Shoulder	.37	.37	.3.50	.50	.50	.75	.75
E - Thread Length	.62	1.00	1.00	.87	1.25	1.50	1.75
F - Thread Size	3/4-16UNF - 2A	1 - 14NS - 2A	1 1/4 - 2UN - 2A	1 3/4 - 12UN - 2A	2 1/4 - 12 UN - 2A	2 1/2 - 12UN - 2A	2 3/4 - 12UN - 2A
G - Hex Nut	1.2 x .25	1.50 x .37	1.75 x .25	2.25 x .50	3.00 x .50	3.25 x .50	3.75 x .50
H - Diameter	.810	1.060	1.310	1.997	2.497	2.747	3.122
I- O - Ring	2 - 17 - 70	2 - 21 - 70	2 - 122 - 70	2 - 224 - 70	2 - 228 - 70	2 - 230 - 70	2 - 233 - 70
J - O - Ring	2 - 23 - 70	2 - 29 - 70	2 - 131 - 70	2 - 142 - 70	2 - 234 - 70	2 - 236 - 70	2 - 241 - 70
K - O - Ring	2 - 16 - 70	2 - 118 -70	2 - 122 - 70	2 - 126 - 70	2 - 225 - 70	2 - 227 -70	2 - 230 - 70
L - O - Ring	NONE	2 - 18 - 70	2 - 22 - 70	2 - 123 - 70	2 - 131 - 70	2 - 135 - 70	2 - 141 - 70
M - Washer	NONE	14 - 489	14 - 589	14 - 689	14 - 789	14 - 889	14 - 989
N - Spirolox Ring	14-388	14-488	14-588	14-688	14-788	14-888	14-988
O - O - Ring	2 - 16 - 70	2 - 23 - 70	2 - 27 - 70	2 - 128 - 70	2 - 225 - 70	2 - 227 - 70	2 - 230 - 70
P - O - Ring	2 - 20 - 70	2 - 27 - 70	5 - 320 - 70	2 - 132 - 70	2 - 140 - 70	2 - 144 - 70	2 - 151 - 70

MOUNTING DIMENSIONS	DIMENSIONS IN INCHES						
D' - Bore Depth	.380/min	.380/min	.380/min	.520/min	.520/min	.520/min	.770/min
F' - Bored	.750/min	.995/min	1.250/min	1.750/min	2.250/min	2.500/min	2.750/min
Threaded	3/4 - 16UNF - 2B	1 - 14NS - 2B	1 1/4 - 12UN - 2B	1 3/4 - 12UN - 2B	2 1/4 - 12UN - 2B	2 1/2 - 12UN - 2B	2 1/4 - 12UN - 2B
H' - Bore Diameter	.812/.814	1.062/1.064	1.312/1.314	2.000/2.002	2.500/2.502	2.750/2.752	3.125/3.127

METAL SHELL CONNECTOR SERIES (MS Series)

Our rugged line of connectors designed to withstand any ocean pressures and practically any physical abuse.

SPECIFICATIONS:

*Pressure range - 0 - 20,000 psi mated and potted
Contacts - copper alloy, gold plated
Voltage - 600V
Temperature range -- -70° to +200°F
Positive indexing - keys and keyways

MATERIALS:

BCR Shell - 316SS per QQ-S-763
CCP Shell - 316SS per QQ-S-763
CCR Shell - 316SS per QQ-S-763
Contact insert-glass filled epoxy per Mil-M-24325
Coupling Nut - Brass
Contacts - Copper alloy, gold plated
Gold Plating - per Mil-G-45204
O Rings - Buna N - 70 Duro

OPTIONS:

Hardware made of other alloys
Compression glass-sealed pins
Pressure balanced oil filled unit
Molded Pigtails on low pressure side
Nut and washer for BCR installation
Pressure sealing caps
Specially coated threads
Slip on assemblies (in-field installation)
Higher voltages
Armored cable terminations
Flange mount bulkhead connectors (standard line available)

*For pressure in excess of 5,000 psi, the BCR internal back end must be potted.

SEA CON® AC

MSS - FCR

FLANGE CONNECTOR RECEPTACLE (FCR)

Mates with CCP



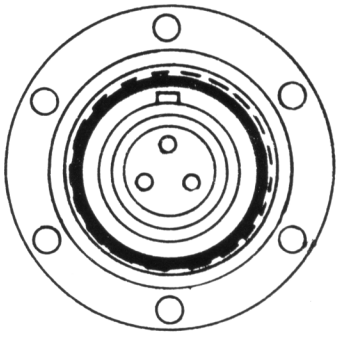

The FCR shown here is a mounting modification to the BCR which is described on the preceding page.

6 BOLT HOLES EQUALLY SPACED
(see B and L below for details)

G, K, L, M, sizes have round keyway. O, P, and Q have square keyway.

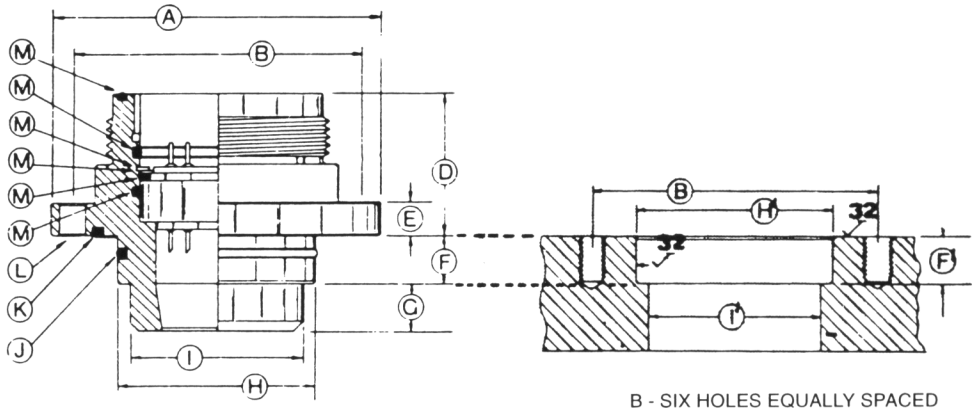

B - SIX HOLES EQUALLY SPACED

G, K, L, M sizes have round keyway. O, P and Q have square keyway. However, with the Aluminum option all sizes have a square keyway. Refer to page 60-5 and 60-6 for contact configurations. G,K,L,M Aluminum connectors will not mate with stainless steel connectors.

SHELL SIZE	G	K	L	M	O	P	Q
A - Diameter	2.12	2.62	3.00	3.87	4.50	4.75	5.25
B - Hole Circle	1.812	2.250	2.500	3.250	3.875	4.125	4.625
D - Height	1.68	2.00	2.00	2.26	2.26	2.26	2.26
E - Height	.37	.37	.38	.51	.51	.51	.51
F - Height	.37	.37	.37	.48	.48	.48	.75
G - Height	.26	.38	.38	.50	.50	.50	.74
H - Diameter	.810 max	1.060 max	1.310 max	1.997 max	2.497 max	2.747 max	3.122 max
I - Diameter	.68	.87	1.12	1.62	2.12	2.37	2.75
J - O - Ring	2 - / 17	2 / 21	2 - 122	2 - 224	2 - 228	2 - 230	2 - 233
K - O - Ring	2 - / 23	2 - / 29	2 - 131	2 - 142	2 - 234	2 - 236	2 - 240
L - Bolt Size	3 / 16"	3 / 16"	1 / 4"	1 / 4"	3 / 8"	3 / 8"	3 / 8"
M - See preceding page for details							

MOUNTING DIMENSIONS **DIMENSIONS IN INCHES**

F' Bore Depth Min	.385/min	.385/min	.385/min	.520/min	.520/min	.520/min	.770/min
H' Bore Diameter	.812/.814	1.062/1.064	1.312/1.314	2.000/2.002	2.500/2.502	2.750/2.752	3.125/3.127
I' Bore Min	.750/min	.890/min.	1.140/min	1.780/min	2.140/min	2.406/min	2.765/min

MSS - CCP

MSS Cable Connector Plug (Mates with MSS-BCR or CCR or FCR)
MSS-Cable Connector Plug, Right Angle

CCP Shell Material: 316 SSt
Engaging Nut: Bronze

TYPICAL PART NUMBER EXPLANITION:

A - Aluminum / S - Stainless — TYPE CONNECTOR

SERIES

MSS-M22-CCP

SHELL SIZE

NO. OF CONTACTS

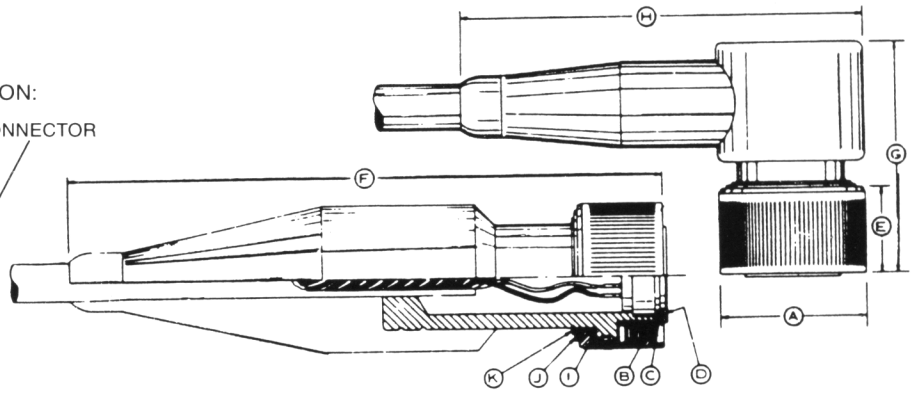

G, K, L, M sizes have round keyway. O, P and Q have square keyway However, with the Aluminum option all sizes have a square keyway. Refer to page 60-5 and 60-6 for contact configurations. G, K, L, M Aluminum connectors will not mate with stainless steel connectors.

SHELL SIZE	G	K	L	M	O	P	Q
A - Diameter	1.37	1.87	2.12	2.50	3.00	3.25	3.87
B - O-Ring	-	2- -17	2 - 21	2 - 24	2 - 127	2 - 131	2 - 137
C - Washer	-	14-479	14-579	14-679	14-779	14-879	14-979
D - Spirolox	-	14-478	14-578	14-678	14-778	14-878	14-978
E - Nut	1.09	1.22	1.22	1.87	1.87	1.87	1.87
F - Length	5.3	6.0	6.0	10.5	10.5	10.8	11.5
G - Height	3.0	3.25	3.25	4.7	5.3	5.3	6.0
H - Length	3,5	3.5	4.50	6.7	7.8	7.8	9.6
I - Nylon Washer	14-374	14-474	14.574	14-674	14-774	14-874	14-974
J - Washer	14-375	14-475	14-575	14-675	14-775	14-875	14-975
K - Retaining Ring	14-373	14-473	14-573	14-673	14-773	14-873	14-973

Dimensions in inches.
Refer to page 60-5 for contact configurations.
NOTE: MSS-G-CCP body is Glass Reinforced Epoxy. The nut is metal.
Connector does not come molded to cable unless specified.

SEA CON AC

MSS - CCR
(INLINE RECEPTACLE)

MSS-CCR (Cable Connector Receptacle)-Mates with MSS-CCP

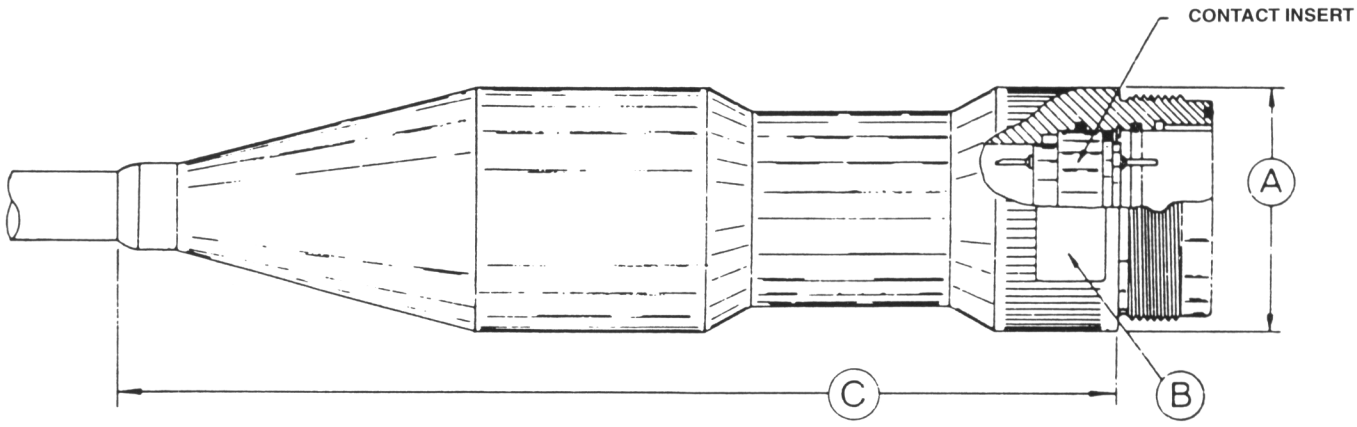

G, K, L, M sizes have round keyway. O, P and Q have square keyway.
Refer to page 60-5 for contact configurations.
G,K,L,M Aluminum connectors will not mate with stainless steel connectors.

SHELL SIZE	G	K	L	M	O	P	Q
A - Diameter	1.37	1.87	2.12	2.50	3.00	3.25	3.87
B -Wrench Flat	1.18	1.62	1.87	2.25	2.75	3.00	3.62
C - Length	5.5	6.7	7.0	9.5	10.0	11.5	12.0

MSS-CCP-SC
STRESS CORE TERMINATION

For termination of cables with stranded wire rope
mechanical members located in the center of the cable

A - Refer to chart on page 60-3
B - Wire Rope
C - Strength Nut
D - Swadge Ball

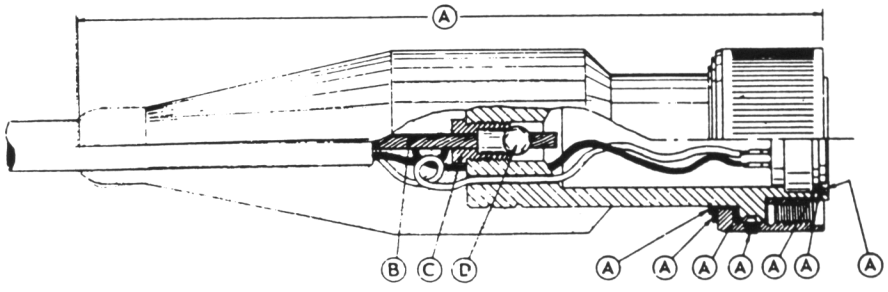

The stress core termination shown above can be accomplished in all the MSS Series sizes with the exception of the MSS-G.
This type of termination will develop the full breaking strength of the electro mechanical cable.
For externally armored cables, see "ARMOR TERMINATION'" section.
Strength is carried through CCP coupling nut and BCR or CCR threads.
Connector bodies do not come molded to cables unless so specified when ordering.

SEA CON ®

MSS SERIES CONTACT CONFIGURATIONS

G

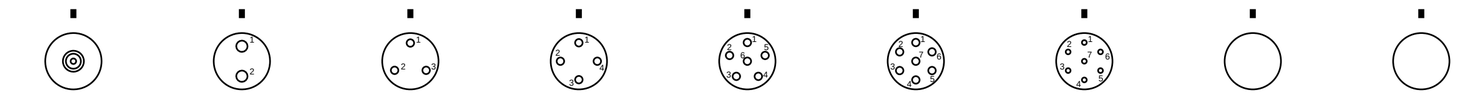

K

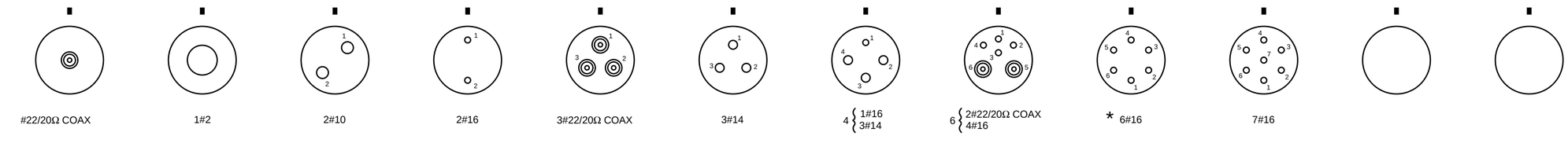

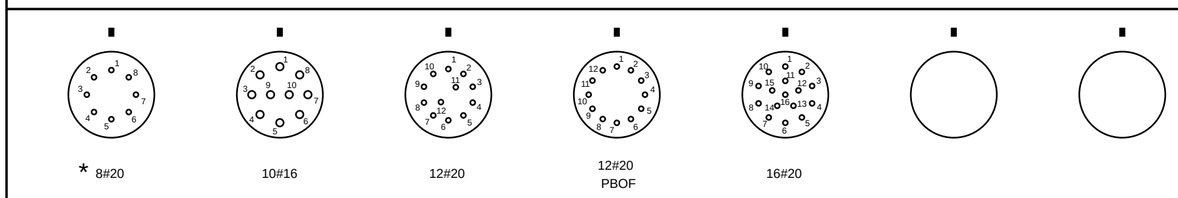

L

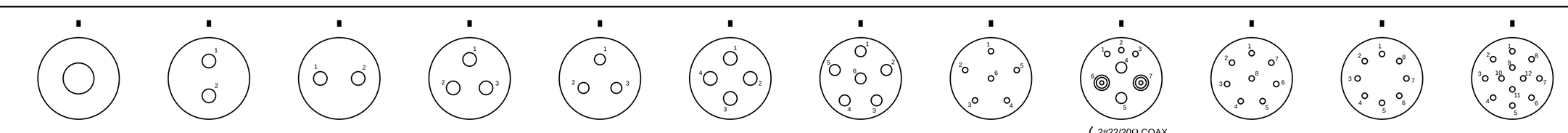

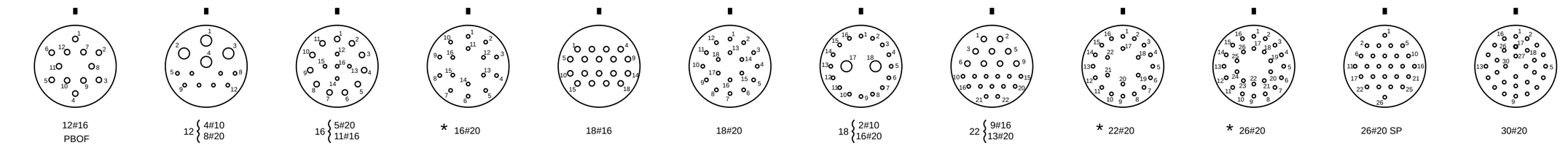

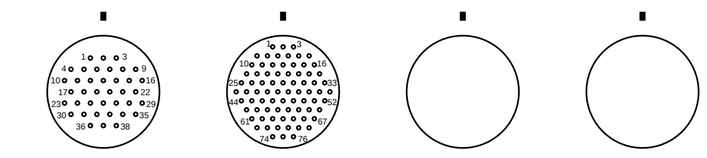

M

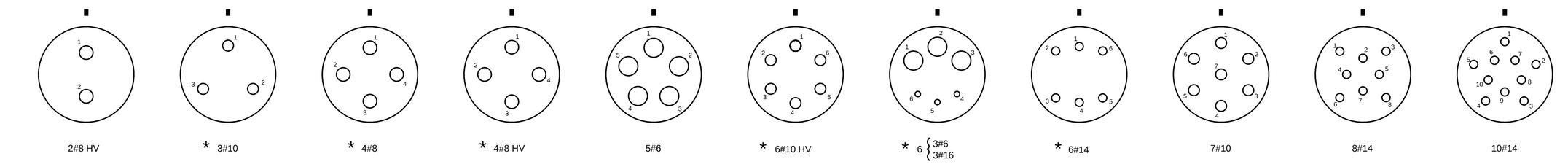

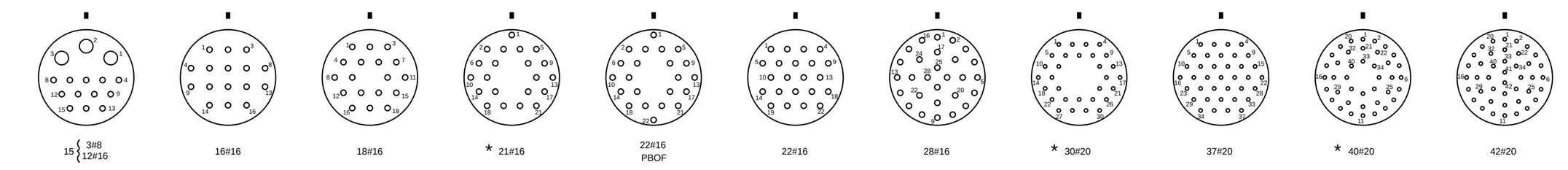

O

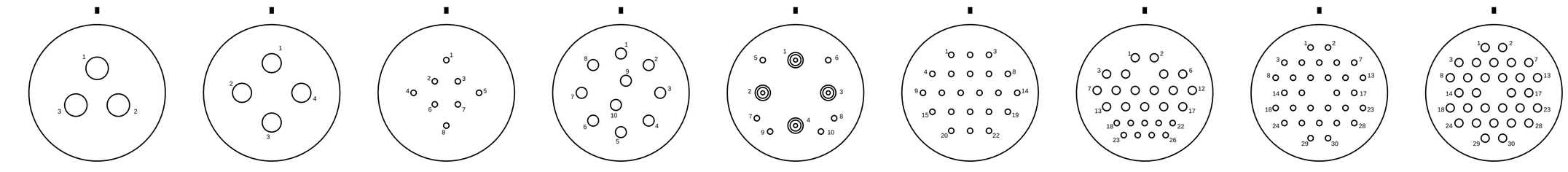

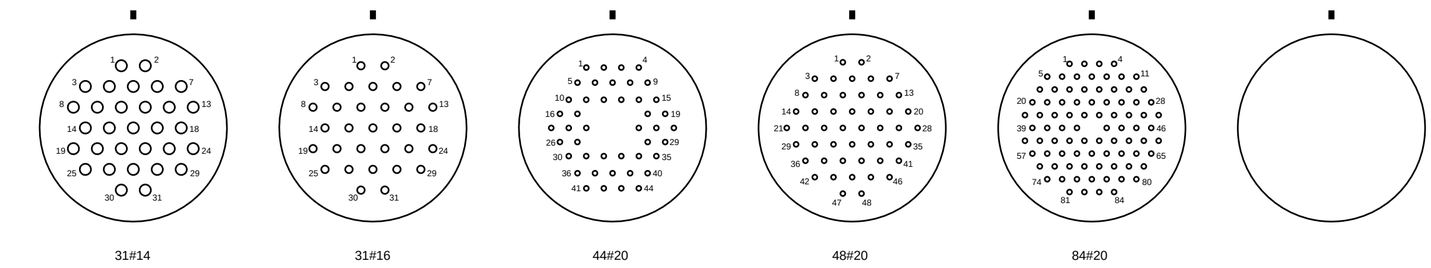

ALL CONFIGURATIONS SHOWN ARE THE FACE VIEW OF THE RECEPTACLE CONNECTOR (BCR/FCR/CCR).

▮ THIS SYMBOL REFERS TO THE RECEPTACLE SHELL KEYWAY WHICH KEYS THE BCR, FCR, CCR SHELL TO THE MATING CCP SHELL.

PBOF IS THE ABBREVIATION FOR PRESSURE BALANCED OIL FILLED STYLE CONNECTORS, REFERENCE CATALOG FOR MORE INFORMATION.

* UPON REQUEST, THESE CONFIGURATIONS ARE ALSO AVAILABLE WITH THE PBOF OPTION.

SEA CON ®

SIZE — MSS SERIES CONTACT CONFIGURATIONS

P

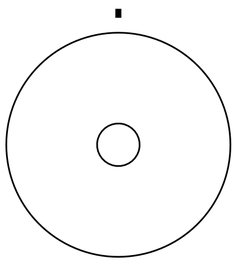

1#1/0

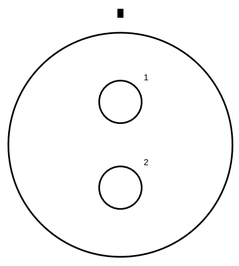

2#1/0

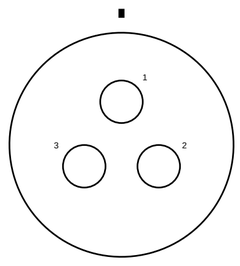

3#1/0

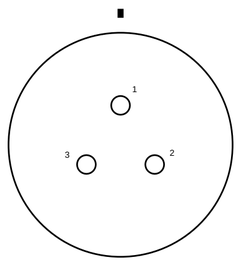

* 3#8

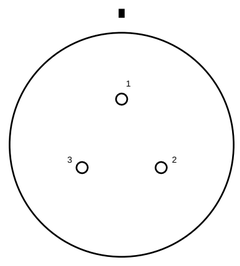

3#14 HV (6000 VAC)

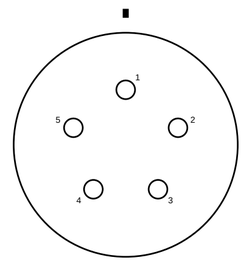

* 5#8

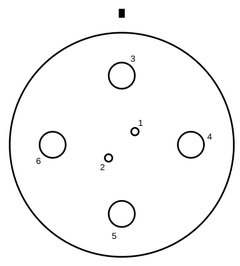

6 { 2#16 / 4#6

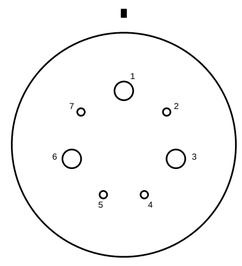

* 7 { 4#16 / 3#8

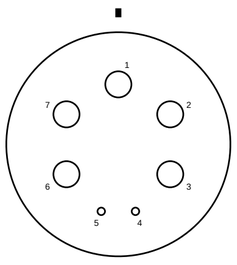

* 7 { 2#16 / 5#6

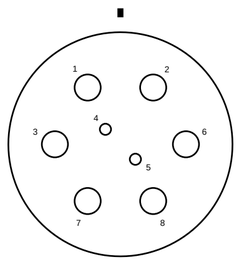

8 { 6#6 / 2#14

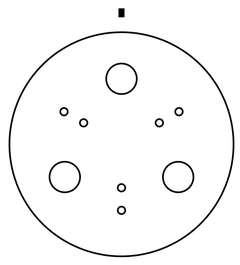

9 { 3#6 / 6#16

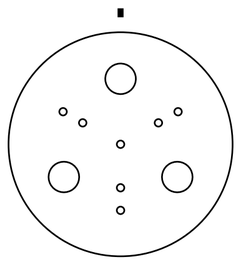

10 { 3#6 / 7#16

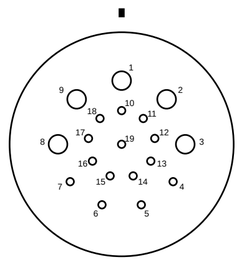

19 { 14#16 / 5#8

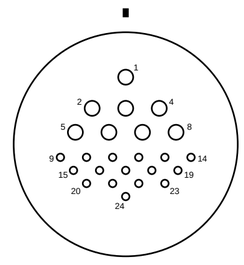

24 { 16#16 / 8#10

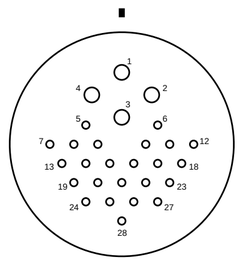

28 { 24#16 / 4#10

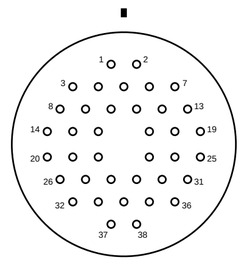

* 38#16

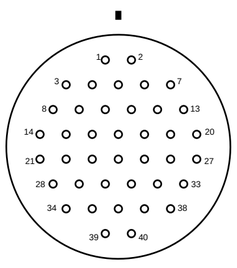

40#16

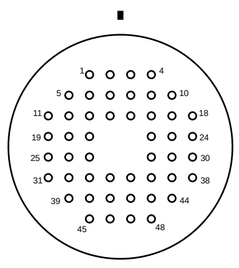

* 48#16

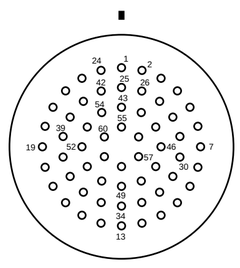

60#16

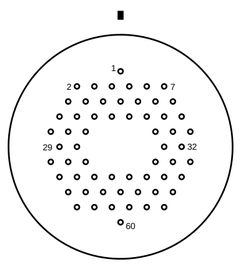

60#20

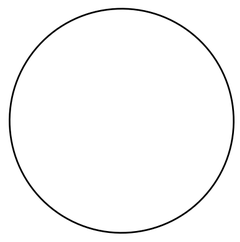

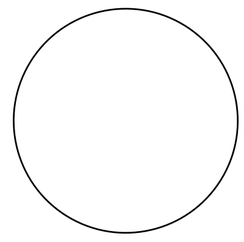

Q

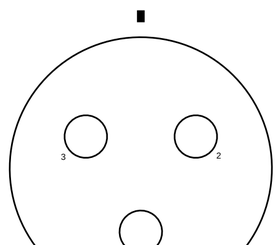

* 3#1/0

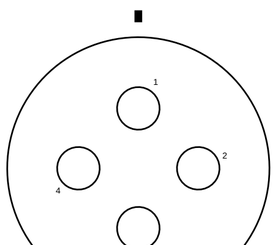

* 4#1/0

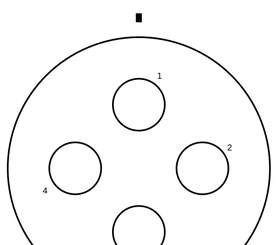

* 4#2/0

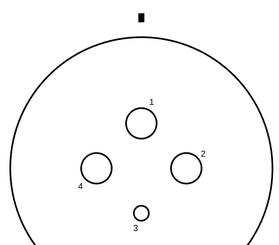

* 4 { 3#4 / 1#10 } HV

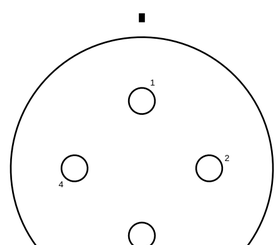

* 4#6

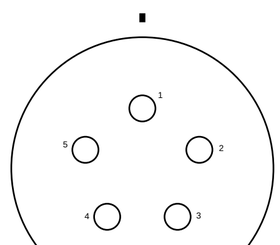

5#6

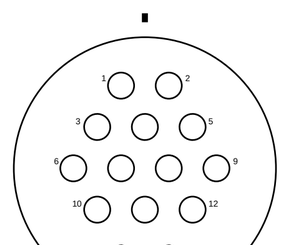

14 { 12#6 / 2#14

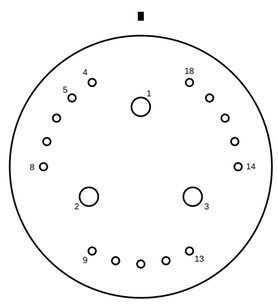

* 18 { 3#8 / 15#16

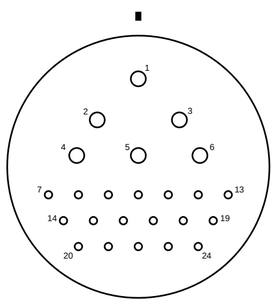

24 { 6#10 / 18#16

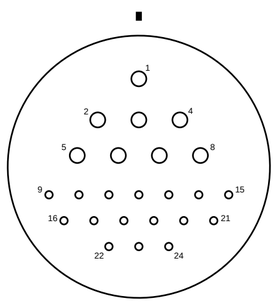

24 { 8#10 / 16#16

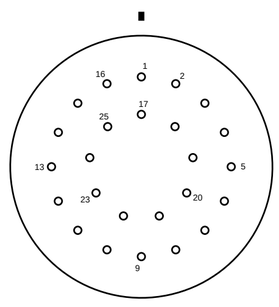

* 25#16

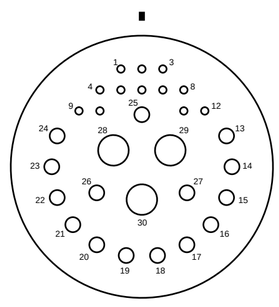

30 { 3#4 / 15#10 / 12#16

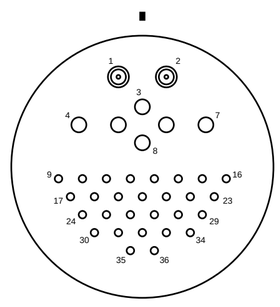

36 { 6#10 / 28#16 / 2#22/20 Ω COAX

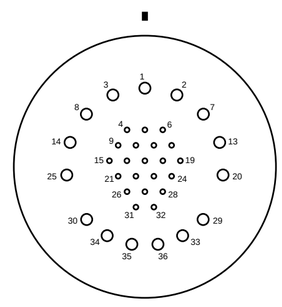

36 { 15#14 / 21#20 } HV

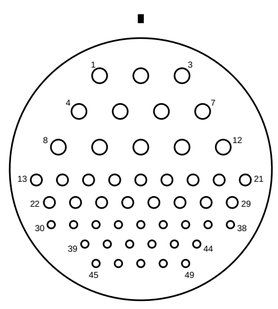

49 { 12#10 / 17#14 / 20#16

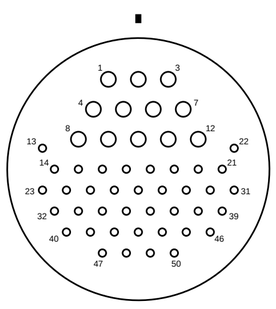

50 { 12#10 / 38#16

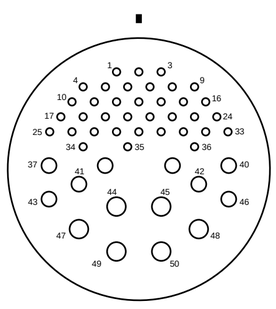

* 50 { 6#8 / 8#10 / 36#16

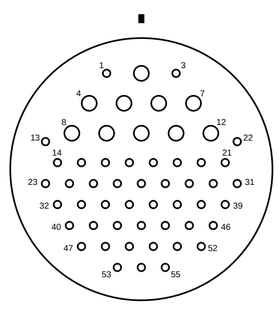

55 { 10#10 / 45#16

55 { 10#10 / 45#16

PBOF

* 60#16

69 { 56#14 / 4#16 / 9#20

82 { 11#16 / 69#20 / 2#22/20Ω COAX

* 84#16

* 88#16

102 { 3#10 / 13#14 / 86#20

104#16

110 { 41#16 / 69#20

* 128#20

R

96#16

S

156#16

ALL CONFIGURATIONS SHOWN ARE THE FACE VIEW OF THE RECEPTACLE CONNECTOR (BCR/FCR/CCR).

▮ THIS SYMBOL REFERS TO THE RECEPTACLE SHELL KEYWAY WHICH KEYS THE BCR, FCR, CCR SHELL TO THE MATING CCP SHELL.

PBOF IS THE ABBREVIATION FOR PRESSURE BALANCED OIL FILLED STYLE CONNECTORS, REFERENCE CATALOG FOR MORE INFORMATION.

* UPON REQUEST, THESE CONFIGURATIONS ARE ALSO AVAILABLE WITH THE PBOF OPTION.

CM2000™ SERIES
UNDERWATER MATEABLE FLUID-FILLED ELECTRICAL CONNECTORS

What do SEA CON® and Lockheed Martin have in common? The new CM2000™ Series of underwater mateable fluid-filled electrical connectors! The CM2000™, developed by Lockheed Martin, manufactured and sold by SEA CON® under a license agreement with technical support from Lockheed Martin. All the design experience of Lockheed Martin combined with the manufacturing and design expertise of SEA CON®. Never before has such a combination of manufacturing and design expertise been available to the subsea market!



DESIGN ADVANTAGES

Unique design features combine superior electrical isolation, and ensure the highest connector reliability. This fluid-filled, pressure balanced subsea electrical connector series uses redundant low stress seals and oil chambers for maximum reliability. The CM2000™'s unique design eliminates the use of shuttle pistons and return springs. Each circuit is contained within redundant individual oil-filled chambers with two completely independent entry seals. This ensures the circuits are sealed from the outside environment, and from every other circuit.

Advanced Modular Design (AMD) offers various contact arrangements all with the same reliable sealing inserts. Connector mating of each contact occurs within two nested fluid-filled chambers. The male probe is wiped and bathed in fluid twice prior to making contact, ensuring twice the protection from the environment without the use of shuttle pistons and return springs.

The CM2000™ series allows the user to mate and demate the connections both on the surface and at depth. Complete pressure equalization ensures ease of mating and demating. The force required to mate and demate is remarkably low and not affected by changes in hydrostatic pressure.

The sealing mechanism does not include springs which make mating difficult and tend to demate the connectors, especially in the higher density connectors. External shells can be customized to fit any application.

Two standard designs are available; stab plate and ROV. We can also design according to your requirements. Please call the factory for more information.

APPLICATIONS

Programs requiring maximum reliability and flexibility of use benefit from the CM2000™'s capabilities. Military applications include sonar arrays, acoustic ranges, magnetic ranges and transducers. Commercial applications include: offshore platform to remote sites, wellhead equipment, subsea platforms, x-mas trees, and Tension Leg Platforms (TLP).

CM2000™ SERIES
UNDERWATER MATEABLE FLUID-FILLED ELECTRICAL CONNECTORS

DESIGN SPECIFICATIONS

MATERIALS

Housings:	AMPCO 483 Bronze (Standard) Tiodized 6Al-4V Titanium INCONEL 625 NITRONIC 50 (or per customer request)	
Contact Module:	Copper Alloy Gold Plated per MIL-G-45204 PEEK Insulator	Male: Beryllium Copper Alloy
Elastomer:	Natural Rubber	

CAPABILITIES

25 Year Life

Operating Voltage:	950 VAC
Operating Current:	15 Amps per contact.
Operating Depth:	Pressure Compensated Backshell - unlimited
Differential Pressure Barrier:	1200 meters std.
Power ‘ON’ Mate and Demate:	(5) Cycles at 600 VDC, and 0.5 AMPS.



CM2000™ SERIES
UNDERWATER MATEABLE FLUID-FILLED ELECTRICAL CONNECTORS

DEEPSTAR TESTING

As a leader in manufacturing superior electrical connectors suitable for subsea applications, the reputation of our products is vital. Southwest Research Institute, a well known testing facility, was contracted to perform the DeepStar testing on the CM2000™ connector. This program was a cooperative industry project developed by Texaco to examine deep water subsea production systems under conditions simulating 6,000 feet of seawater. The CM2000™ Series successfully passed Deepstar Testing!

BASELINE REQUIREMENTS:
6,000 feet water depth
36-38°F operating temperature
Electrohydraulic control systems
Slab Plate Configurations

FUNCTIONAL REQUIREMENTS:
Make and break under maximum external rated working pressure with minimum release of fluid to the environment and without damage. Specific areas of concern are seals and mechanical contact elements.
Capable of multiple make and break cycles.
Seals tolerant to silt conditions.
Low contact resistance.
Voltage and current ratings consistent with subsea electrical control system pod and umbilical applications.
Minimum electrical leakage to the seawater environment.
Make and break in silty seawater at rated electrical voltage under light current (0.5 amp) conditions.

CHARACTERISTICS	VALUE	UNITS
Rated External Pressure	8200 (2500)	ft(meters)
External Proof Pressure	5500	psi
Force to Fully Mate	25	lbf
Rated Voltage	950	vac
Rated Current per Conductor (20° C rise)	15	amps
Maximum Axial Separation	0.10	inches
Maximum Angular Misalignment	0.5	degrees
Maximum Radial Misalignment	0.032	inches
Maximum Rotational Misalignment	0.5	degrees
Maximum Rotational Torque	100	in-lb
Body Material(s)	Al-Ni Bronze	—
Seal Material(s)	Natural Rubber	—
Type of Termination	PCOF	—
Make and Break Speed (if not 1 ft/sec)	—	ft/sec
Maximum Number of Cycles in Air	200	—
Maximum Number of Cycles in Seawater	200	—
Power on Mate/Demate-Maximum DC Voltage	600	vdc
Power on Mate/Demate-Maximum DC Current	0.5	amps

CM2000™ SERIES
UNDERWATER MATEABLE FLUID-FILLED ELECTRICAL CONNECTORS

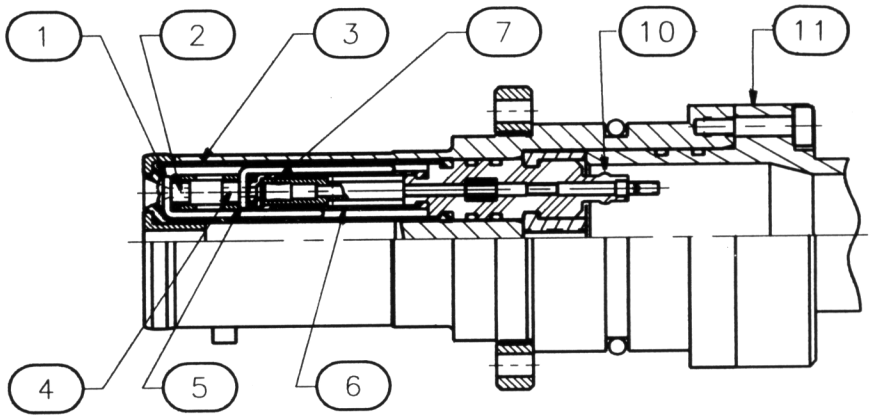

RECEPTABLE ASSEMBLY SECTION

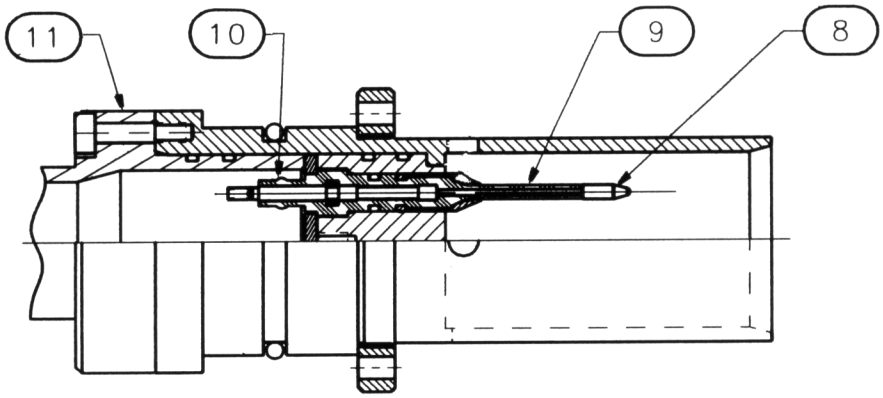

PLUG ASSEMBLY SECTION

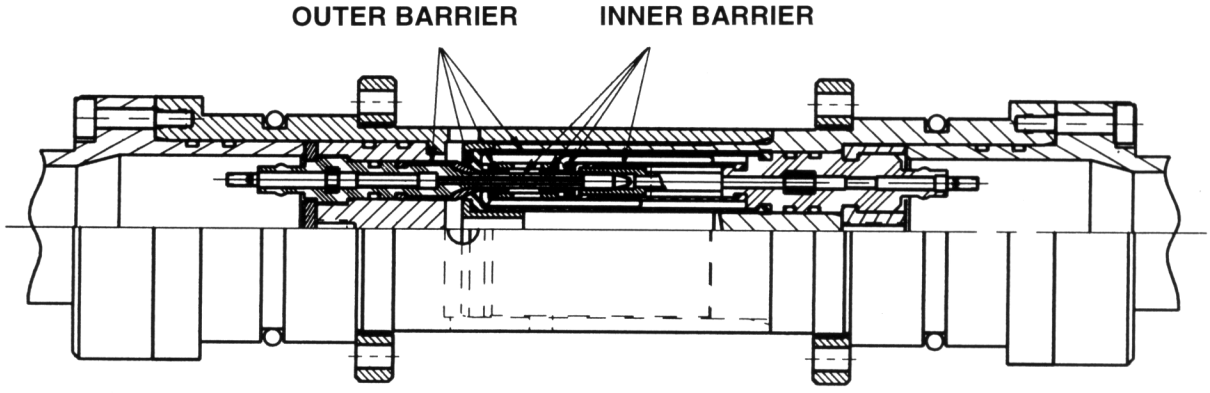

MATED CONNECTOR SECTION

1. Outer Closure Spring
2. Outer Entry Seal
3. Outer Bladder
4. Inner Entry Seal
5. Inner Closure Spring
6. Inner Bladder
7. Socket Contact
8. Pin Contact
9. Insulated Probe
10. Wiring Boot Seal Interface
11. Backshell Adapter

SEA CON® A

CM2000™ SERIES
UNDERWATER MATEABLE FLUID-FILLED ELECTRICAL CONNECTORS
STAB CONNECTOR

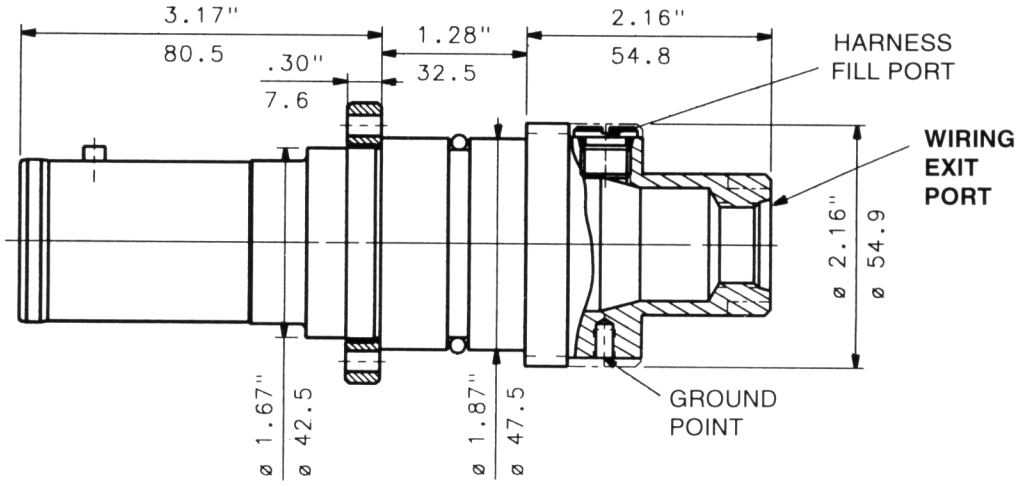

RECEPTABLE OUTLINE

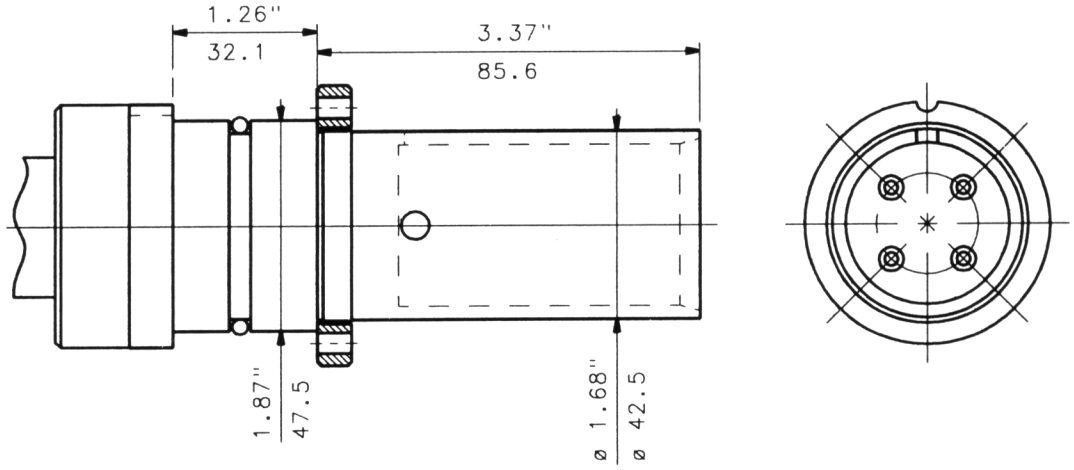

PLUG OUTLINE

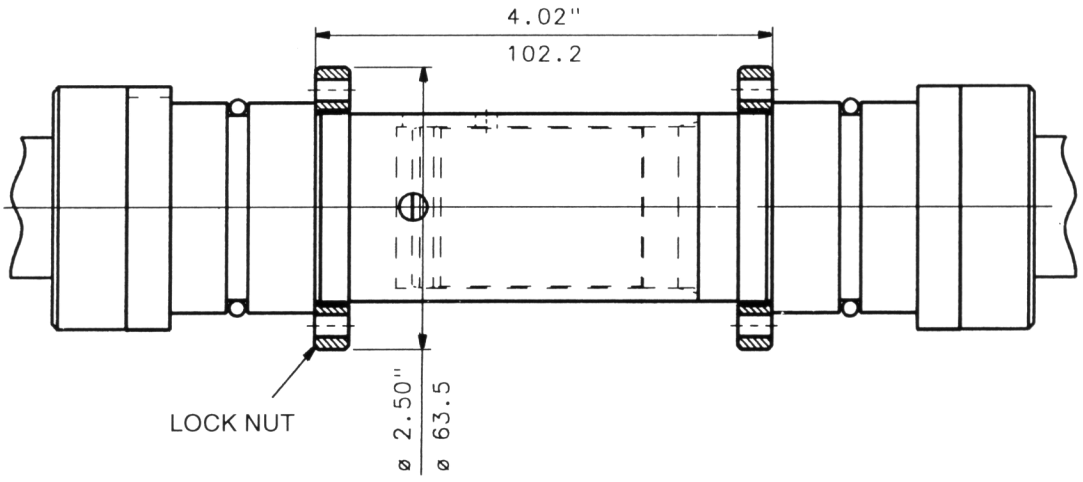

MATED CONNECTOR OUTLINE

SEA CON® A

CM2000™ SERIES
UNDERWATER MATEABLE FLUID-FILLED ELECTRICAL CONNECTORS
ROV CONNECTOR

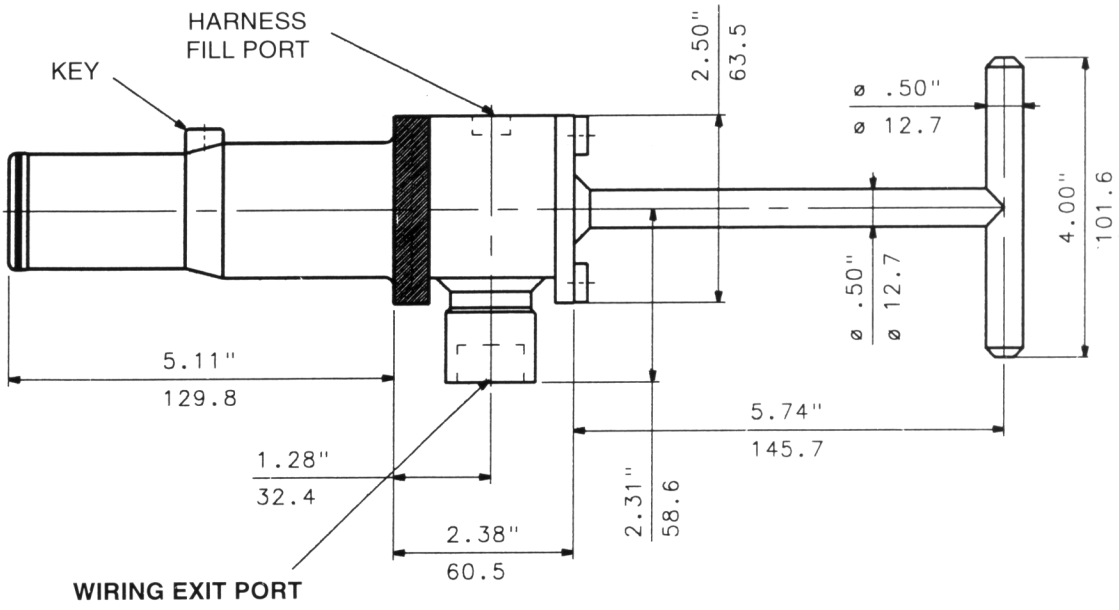

PLUG OUTLINE

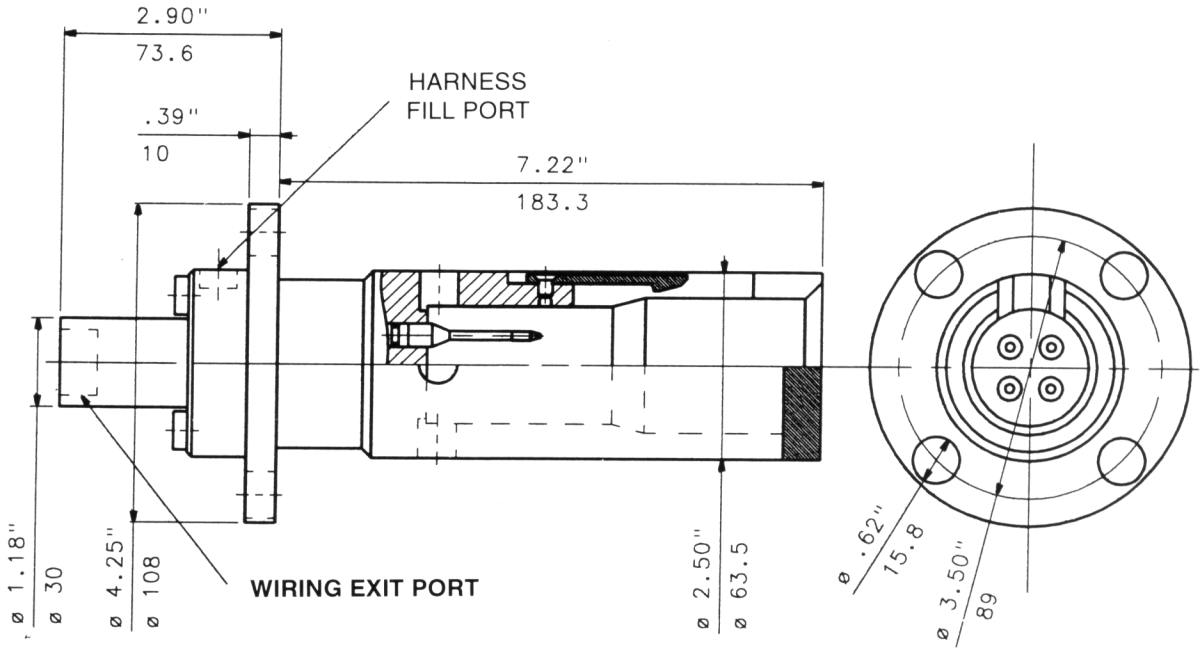

RECEPTABLE OUTLINE

CM2000™ SERIES
UNDERWATER MATEABLE FLUID-FILLED ELECTRICAL CONNECTORS
ROV CONNECTOR

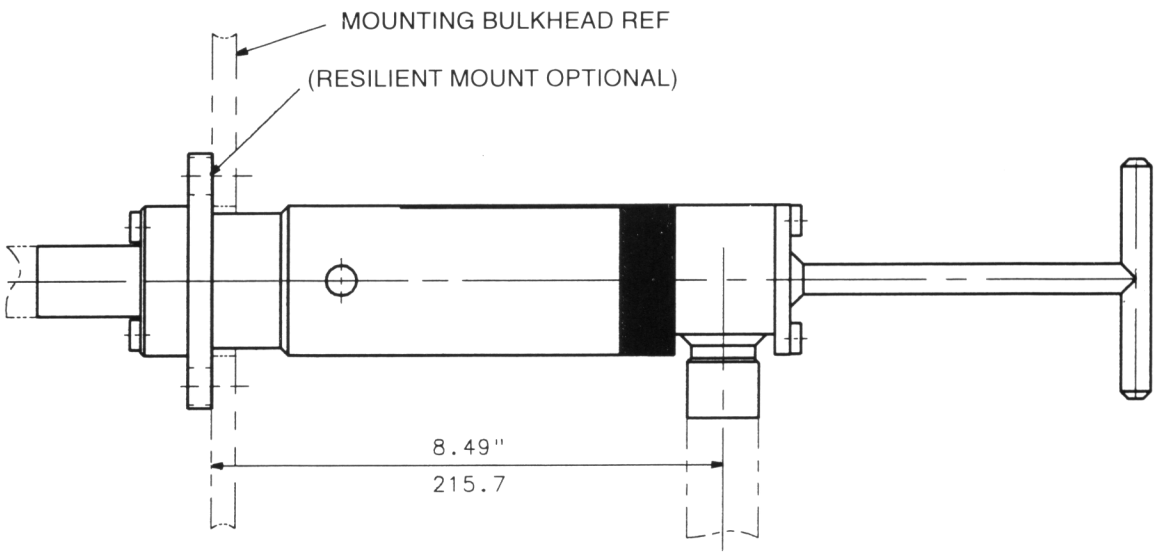

MATED CONNECTOR OUTLINE

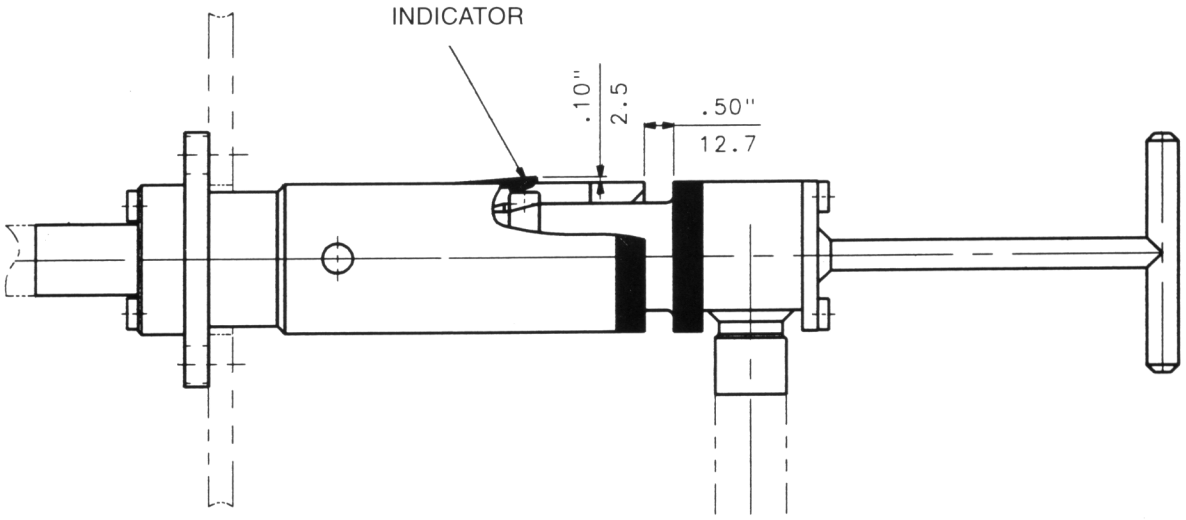

MATE INDICATION / DETENT

SEA CON® A

CM2000™ SERIES
UNDERWATER MATEABLE FLUID-FILLED ELECTRICAL CONNECTORS
ROV SPECIFICATIONS

Please contact the factory for detailed information.

CM HydraStar™

SEA CON® and Lockheed Martin, under a licensing agreement, have joined forces to develop, manufacture and market the CM HydraStar™ series of underwater mateable electro/optical connectors.

For a connector to provide a consistent low loss fiber circuit connection, the critical fiber-to-fiber joint must be made without exposure to external contamination. To accomplish this in a harsh subsea environment, both ends of the optical joint must be protected from external contaminants (seawater, silt, sand). This can be accomplished by enclosing both joint ends within protective fluid-filled pressure compensated chambers.

These separate chambers must then be joined together subsea by removing contaminants from the mating interface, establishing seals between the two chambers, opening the individual chamber seals to join the volumes, and finally connecting the joint through the entry area.

Conventional thinking would orient the optical or electrical parallel with the main axis of the connector. However, this means that contaminants would be trapped within an interface volume between the mating faces during mating. Complex sealing and flushing methods have been developed which minimize the amount of external contamination ingested or internal compensating fluid lost, but the topology of these approaches does not provide a reliable, truly contamination-free mating interface. Therefore, another approach was needed.

The CM HydraStar™ provides an innovative and less conventional design approach. The individual contacts are clocked around and oriented at an angle to the main axis of the connector. When demated, one end on the joint can be deflected down to fit under its cover sleeve, while the opposite fixed end of the joint has its own cover sleeve. This arrangement allows use of a unique set of seals for the internal fluid chambers that permits making the optical and/or electrical connections through a linear intersection seal interface. The transition from two separate chambers to a single “joined chamber” is made with no trapped volume or surfaces, without loss of internal fluid, and without ingestion of external contaminants.

Design Advantages

- Simple overall design with few moving parts ensure highest reliability.



- Individual modular optical contacts use well proven commercial off-the-shell (COTS) optical ferrules and split sleeves suitable for single-mode or multi-mode fibers.
- Individual modular electrical contacts use well proven COTS 2mm electrical pins and sockets. Electrical connection within the internal fluid chamber includes a redundant electrical isolation bladder over each new contact when mated.
- Optical and electrical modular contacts use interchangeable mountings; connector pin complement can be optical, electrical or electro-optical hybrid mix as needed to meet system requirements.
- Radical placement of the modular individual contacts permits increasing or decreasing the number of contacts by increasing or decreasing the diameter of the connector.
- No maintenance or replenishment of the fluid is needed after > 100 mate/demate cycles.

Environment Specifications

Rated to 7000 meters water depth (680 atm, 10,000 psi)
0° to 40 ° C operating range
-20° to 60° C storage/transit
Single-Mode and Multi-Mode optical terminations plus electrical terminations

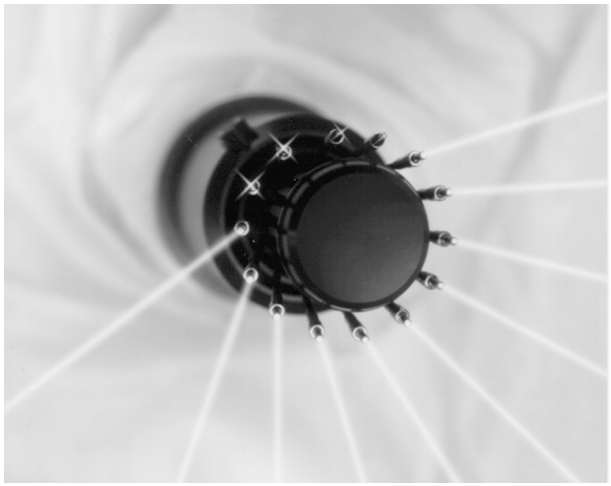

Functional Specifications

Fluid-filled and pressure balanced design
Connectors mate and de-mate
at full rated working pressure
Minimum mate/de-mate cycle,
100, no fluid replenishment required
Mating force, ≃ 222 Newtons (50 lbs.) (8-channel)
Connection tolerant of sand and silt environment

OPTICAL CONTACTS	INSERTION LOSS	RETURN LOSS
First Mate	≤ -0.5 dB	< -45 dB
After 100 Mates	≤ -0.5 dB	< -45 dB

Design Specifications

Mating Configurations:

Diver mate with locking sleeve
ROV mate with manipulator handle
Stab-Plate mate

ELECTRICAL CONTACTS RATED FOR 10 AMPS AT 1000 VAC CONTINUOUS			
	CONTACT RESISTANCE	INSULATION RESISTANCE	HiPot LEAKAGE MAX @ 2.5 KV FOR 1 MINUTE
First Mate	≤ 10 milliOhm	⊕ 1 GigOhm @ 1000 VDC	0.03mA
After 100 Mates	≤ 15 milliOhm	⊕ 1 GigOhm @ 1000 VDC	0.03mA

Cable Configurations:

Steel Armor Terminations
Kevlar Armor Terminations
PBOF Hose Terminations

Contact Arrangements:

8-channel
15-channel
as required

Modular Contact Design

Single-Mode	optical
Multi-Mode	optical
→2mm	electrical

For a complete description of how the CM HydraStar works, please see the mate/de-mate sequence as described in detail on the following pages.

Connection Sequence

Physical Alignment

First, the two connectors halves are physically aligned; the halves are centered axially by stepped mating diameters, and clocked rotationally by a key on the male half and a key way on the female half.

At the end of the alignment phase, the conical chamber seals on each half engage with their respective interface on the opposite connector half. The seals squeeze out all external fluid from the joint.

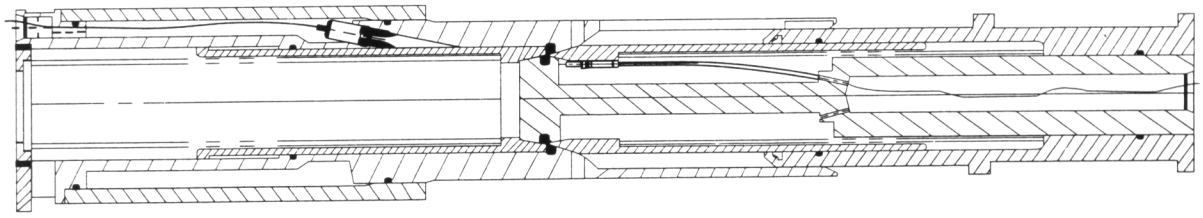

Join Chambers

As mating continues, the female internal cover sleeve is retracted by the front end of the male connector, and the external cover sleeve on the male connector is retracted by the female housing. This opens the poppet seals between the cover sleeve and housing of the male and female halves, thereby joining the fluid-filled chambers of both connector halves.

As the male external cover sleeve continues to retract, the flexible tubes in the male half which were held down by the external cover are now released. The flexible tubes splay into internal guide grooves in the female housing.

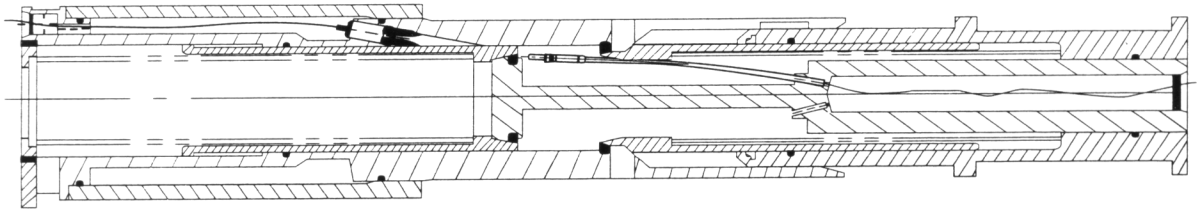

Make Contacts

Finally, the flexible guide tubes continue to splay until the contacts on the end of the flexible tube complete circuits with the contacts in the female half.

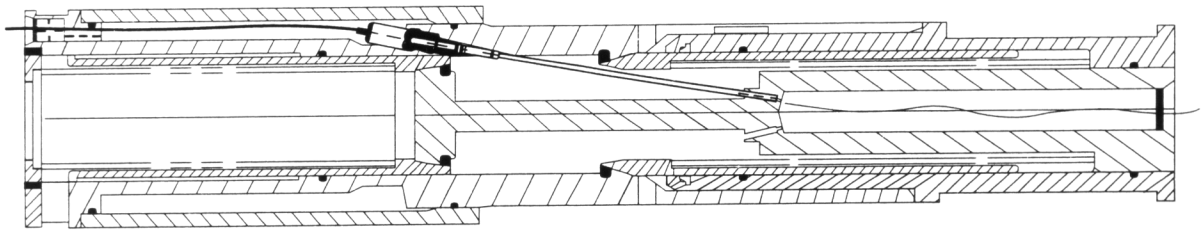

Contact factory for detailed interface outline and dimensions.

SEA CON® A

Plug Connector Half

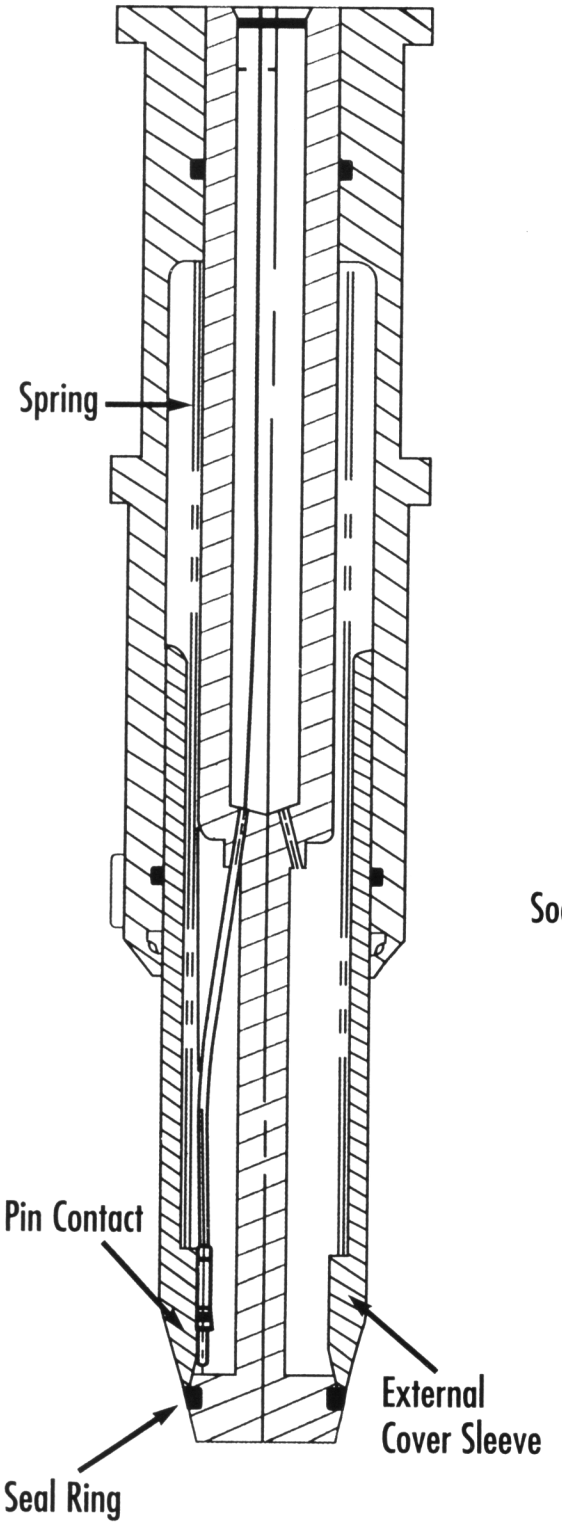

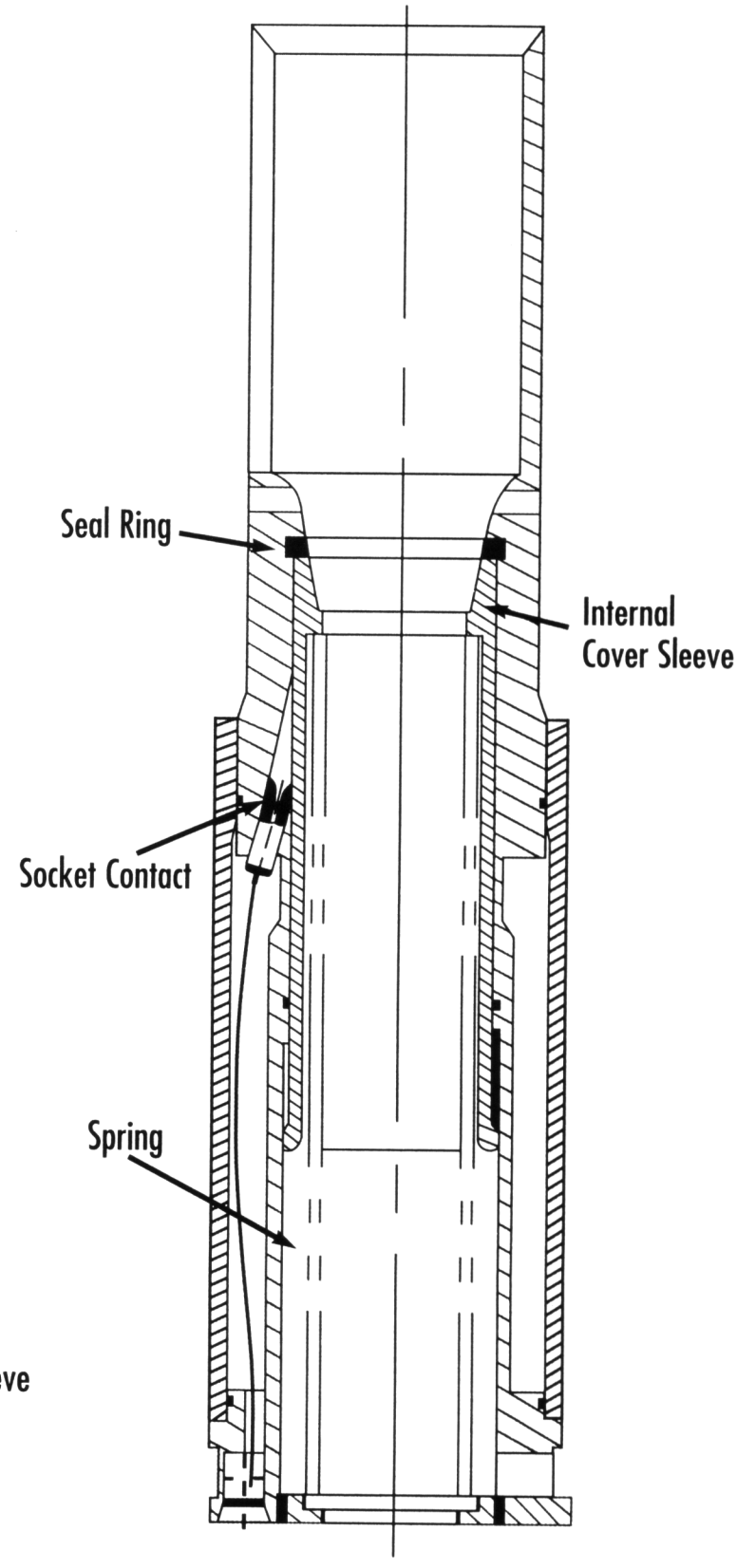

Receptacle Connector Half

SEACON® A

CM HydraStar™ SERIES
UNDERWATER MATEABLE FLUID-FILLED ELECTRICAL CONNECTORS
AVAILABLE CONFIGURATIONS

Please contact the factory for detailed information.

NPT PENETRATOR

REVISIONS				
ZONE	REV.	DESCRIPTION	DATE	APPROVED

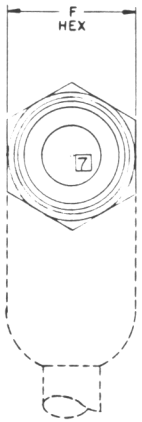

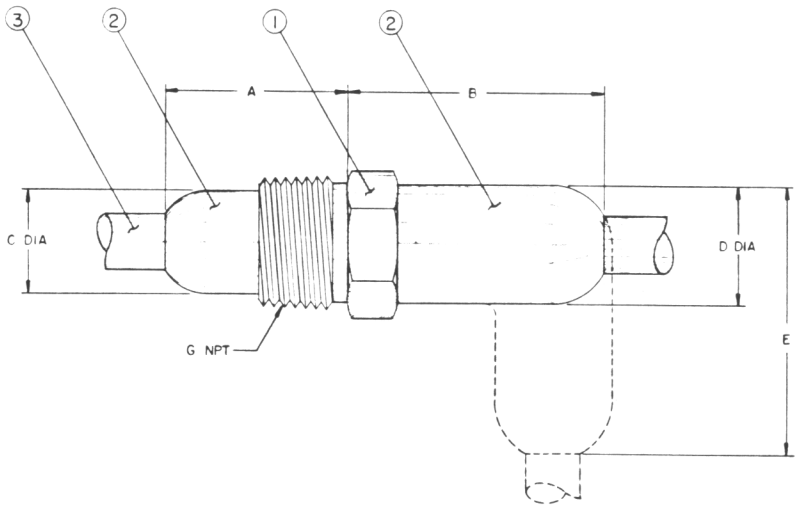

DASH NO	-1	-2	-3
PENT SIZE	B/A 5757 1" NPT	B/A 5756 3/4" NPT	B/A 5755 1/2" NPT
A	1.95	1.70	1.50
B	1.80	1.80	1.80
C DIA	1.08	.87	.62
D DIA	1.37	.93	.82
E	2.8	2.5	2.0
F HEX	1.37	1.06	.87
G NPT	1-11 1/2	3/4-14	1/2-14

ITEM	NOMENCLATURE OR DESCRIPTION
1	NPT PENETRATOR
2	NEOPRENE MOLDING (POLYURETHANE OPTIONAL)
3	CABLE

NOTES:

1. MATERIAL: 316 STAINLESS STEEL PER QQ-S-763.
2. MATERIAL: NEOPRENE MOLDING B/A - X5727.
3. TIN PLATED CONTACT LEADS PER MIL-T-10727, TYPE I, AND FUSED.
4. HERMETIC SEAL MUST WITHSTAND 10,000 P.S.I. TEST HYDROSTATIC PRESSURE
5. TEST VOLTAGE 800 VAC FOR 3 SECONDS MIN. WITHOUT BREAKDOWN.
6. ELECTRICAL RESISTANCE 500 MEG. OHMS AT 500 VDC.
7. MAXIMUM CONTACT CONFIGURATION: 8 PIN.
8. POLYURETHANE, BLACK, MIL - M-24041.

These Penetrators are our "Standards". We have designed and sold many unique penetrators for special applications. If your needs do not fall within these standards, our Sales and Engineering Departments can assist you by recommending an existing design or developing a new one.

ITEM	QTY REQD	FSCM NO.	PART OR IDENTIFYING NO.	NOMENCLATURE OR DESCRIPTION	MATERIAL SPECIFICATION
3	AR	—	———	CABLE	—
2	AR	—	———	NEOPRENE MOLDING (POLYURETHANE OPTIONAL)	2 OR 8
1	AR	—	SEE DASH NO.	NPT PENETRATOR	1

PARTS LIST — SEA CON®

UNLESS OTHERWISE SPECIFIED DIMENSIONS ARE IN INCHES. TOLERANCES ARE: FRACTIONS ± 1/32, DECIMALS .XX ± .015, .XXX ± .005, ANGLES ± 1/2°

MATERIAL: SEE NOTES

FINISH: 125

DO NOT SCALE DRAWING

CONTRACT NO.

APPROVALS	DATE
DRAWN	5-17-82
CHECKED	5-19-82
ISSUED	

BRANTNER & ASSOCIATES, Inc.
MAIN PLANT 3601 HANCOCK ST. SAN DIEGO, CALIF. 92110

NPT PENETRATOR

SIZE	FSCM NO.	DWG. NO.	REV.
C	15789	6187-0	

SCALE NONE — SHEET

ASSY HARDWARE	PART NO.
APPLICATION	

BISHOP GRAPHICS/ACCUPRESS REORDER NO. A17885

MLSG-FT + ASSY.

REVISIONS				
ZONE	REV	DESCRIPTION	DATE	APPROVED
	A	REF. ECO 1432; ADDED CHART, .06	May 14, 1982	D. S.
	B	REF. ECO 1454. CHANGED NOTES 9	May 30, 82	D S
	C	REF. ECO 4893, CHANGED NOTES 7	87-9-23	D.S.

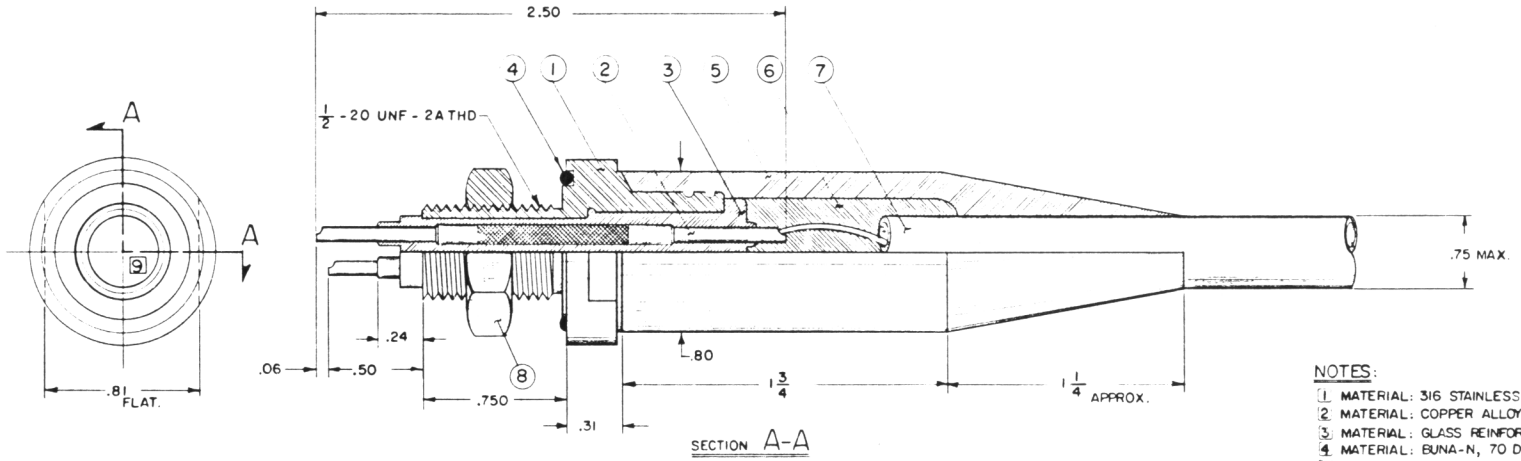

SECTION A-A

NOTES:
1. MATERIAL: 316 STAINLESS STEEL PER QQ-S-763.
2. MATERIAL: COPPER ALLOY & GOLD PLATED PER MIL-G-45204.
3. MATERIAL: GLASS REINFORCED EPOXY B/A XS-2748.
4. MATERIAL: BUNA-N, 70 DURO.
5. MATERIAL: NEOPRENE MOLDING. X-5727.
6. MATERIAL: EPON 828/CIBA 840.
7. MATERIAL: 304 STAINLESS STEEL PER QQ-S-763.
8. MATERIAL: POLYURETHANE, BLACK. MIL-M-24041.
9. CONTACT CONFIGURATIONS. 1) 3 #16 AWG.

MOUNTING INSTRUCTIONS.

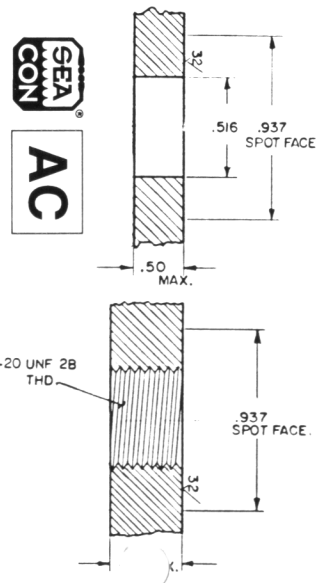

ITEM	NOMENCLATURE OR DESCRIPTION
1	MLSG-FT SHELL 316 SST
2	#16 AWG. CONTACT
3	MOLDED EPOXY
4	O-RING 2-017
5	MOLDED NEOPRENE (POLYURETHANE OPTIONAL)
6	EPOXY (EPON 828 / CIBA 840)
7	CABLE
8	1/2-20 UNF-2B NUT (OPTIONAL)

ITEM	QTY REQD	FSCM NO.	PART OR IDENTIFYING NO.	NOMENCLATURE OR DESCRIPTION	MATERIAL SPECIFICATION
8	—	15789	B/A 615	1/2-20 UNF-2B NUT (OPTIONAL)	7
7	AR	—	———	CABLE	—
6	AR	—	———	EPOXY	6
5	AR	—	———	NEOPRENE MOLDED (POLYURETHANE OPTIONAL)	5 OR 8
4	1	—	2-017	O-RING	4
3	AR	—	———	MOLD EPOXY	3
2	AR	15789	B/A 3411	#16 AWG CONTACT	2
1	1	15789	B/A 5770	MLSG-FT SHELL	1

PARTS LIST SEA CON®

UNLESS OTHERWISE SPECIFIED DIMENSIONS ARE IN INCHES
TOLERANCES ARE:
FRACTIONS ± 1/32 DECIMALS .XX ± .015 .XXX ± .005 ANGLES ± 1°

MATERIAL: SEE NOTES
FINISH: 125

DO NOT SCALE DRAWING

CONTRACT NO.

APPROVALS	DATE
DRAWN	
CHECKED	
ISSUED	

BRANTNER & ASSOCIATES, Inc.
MAIN PLANT 3801 HANCOCK ST. SAN DIEGO, CALIF. 92110

MLSG-FT & ASSY.

SIZE C | FSCM NO. 15789 | DWG. NO. 6176-0 | REV C
SCALE NONE | SHEET

HARDWARE	PART NO.
APPLICATION	

65-2 (REV 032098)

BISHOP GRAPHICS/ACCUPRESS

PSS-PENETRATOR

NOTES:

1. MATERIAL: 316 SST PER QQ-S-763.
2. MATERIAL: 303 SST PER QQ-S-763.
3. MATERIAL: BUNA-N-70 DURO.
4. MATERIAL: NEOPRENE MOLDING B/A X-5727.
5. STAINLESS STEEL PARTS TO BE PASSIVATED AS PER QQ-P-35, TYPE I, UPON COMPLETION OF MACHINING.
6. MATERIAL: WHITE EPOXY PER B/A 6373.
7. PRESSURE RATING (SEALED CABLE END) 20,000 PSI.

REVISIONS					
ZONE	REV	REF E.C.O. NO.	DESCRIPTION	DATE	APPROVED
	C	5311	ADDED ITEM #8, 9 & REDRAW	881028	D.S
	D	6053	ADD NOTES 7,8,9	890719	L.P.
	E	6175	ADD PART NO. TO CHART	[illegible]	[illegible]

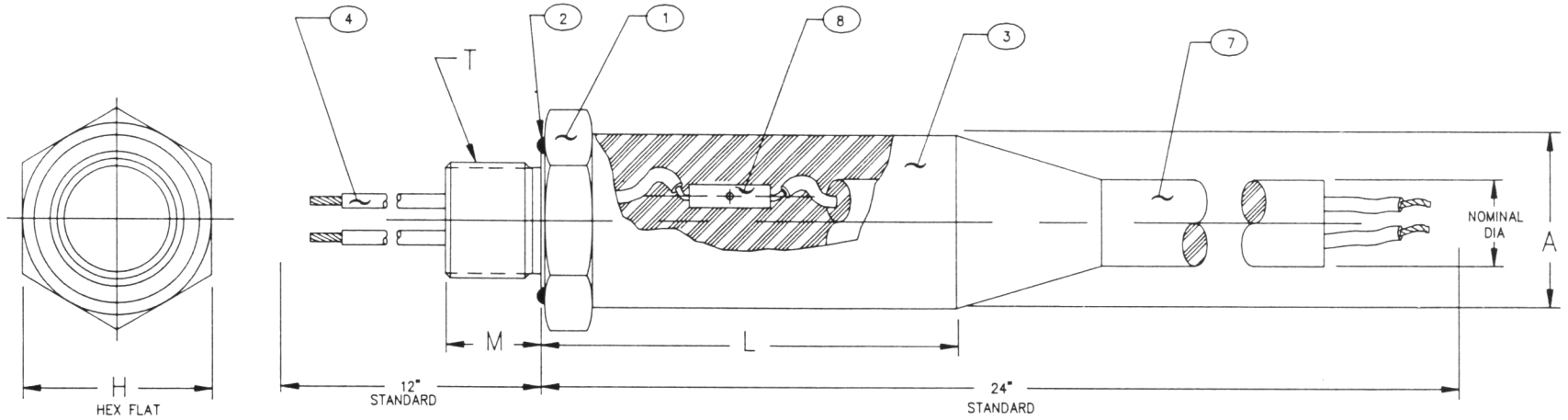

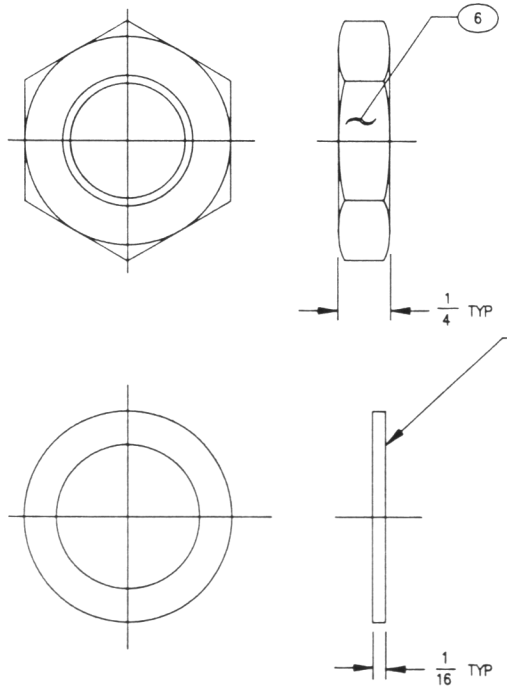

EO P/N	PSS	A	L	M	H	T	O-RING	CABLE	NOMINAL DIA
41-02	PSSK-2-	.75	1.75	.50	.75	7/16 -20 UNF-2A	2-014	18/2 SO	.39
41-03	PSSL-3-	.87	2.18	.50	1.12	5/8 -18 UNF-2A	2-019	18/3 SO	.40
41-04	PSSM-4-	.87	2.18	.50	1.12	5/8 -18 UNF-2A	2-019	18/4 SO	.43
41-06	PSSO-6-	1.12	2.37	.50	1.25	7/8 -14 UNF-2A	2-021	18/6 SO	.52
41-08	PSSP-8-	1.12	2.37	.50	1.25	7/8 -14 UNF-2A	2-021	18/8 SO	.60
41-12	PSSQ-12-	1.25	3.12	.87	1.50	1-14 UNF-2A	2-122	18/12 SO	.66

ITEM	QTY REQD	FSCM NO.	PART OR IDENTIFYING NO.	NOMENCLATURE OR DESCRIPTION	MATERIAL SPECIFICATION
9	AR	—	—	EPOXY (NOT SHOWN)	6
8	AR	—	—	BUTT SPLICE	—
7	AR	—	—	#18 AWG. SO TYPE CABLE	—
6	AR	15789	—	HEX NUT (OPTIONAL)	2
5	AR	15789	—	WASHER (OPTIONAL)	2
4	AR	—	—	#18 AWG. PIGTAIL HOOK-UP WIRE TYPE "E" WHITE	—
3	AR	—	—	NEOPRENE MOLDED	4
2	AR	—	—	O-RING	3
1	AR	15789	79-3-000	PSS-PENETRATOR	1

PARTS LIST SEACON®

ASSY HARDWARE	PART NO.
APPLICATION	

UNLESS OTHERWISE SPECIFIED DIMENSIONS ARE IN INCHES
TOLERANCES ARE:
FRACTIONS ± 1/32 DECIMALS .XX± .015 .XXX± .005 ANGLES ±1/2°
BREAK ALL EDGES & CORNERS .015
RAD. ALL DIA. TO BE CONCENTRIC WITHIN .004 TIR
FINISH 125
DO NOT SCALE DRAWING

CONTRACT NO.

APPROVALS		DATE
DRAWN	HOA L	880421
CHECKED	LAI PHAM	881028
ISSUED		

BRANTNER & ASSOCIATES, INC.
MAIN PLANT 1240 VERNON WAY EL CAJON, CALIF. 92020

PSS-PENETRATOR

SIZE	FSCM NO.	DWG NO.	REV
C	15789	79-3-000-0	E

SCALE 2/1 SHEET OF

SEACON® AC

MSG-FT + ASSY.

REVISIONS				
ZONE	REV.	DESCRIPTION	DATE	APPROVED
	A	REF. ECO 1433, ADDED CHART	May 14, 1982	D.S.
	B	REF. E.C.O. 1451 ADD NOTED [9]	May 20, 1983	D.S.
	C	REF. ECO 4863 REVISED NOTED [7]	Sept. 16, 87	D.S.

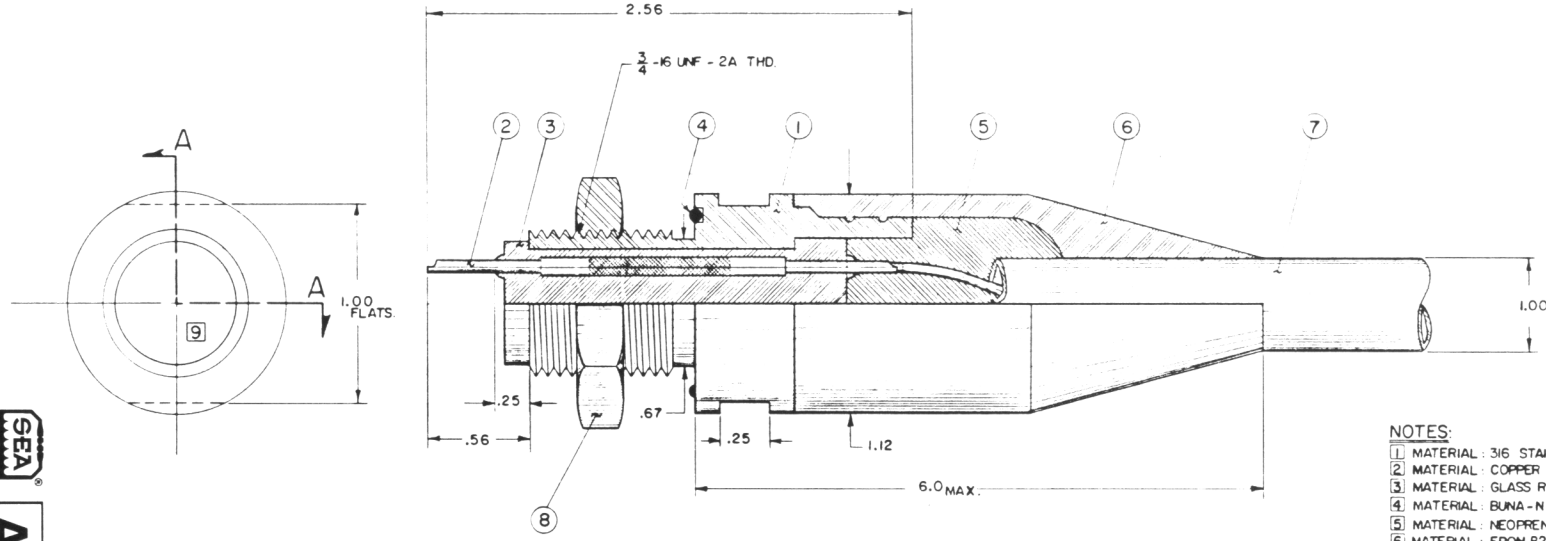

SECTION "A-A"

NOTES:
1. MATERIAL: 316 STAINLESS STEEL PER QQ-S-763.
2. MATERIAL: COPPER ALLOY & GOLD PLATED PER MIL-G-45204.
3. MATERIAL: GLASS REINFORCED EPOXY B/A XS-2748.
4. MATERIAL: BUNA-N, 70 DURO.
5. MATERIAL: NEOPRENE MOLDING B/A X5727.
6. MATERIAL: EPON 828/CIBA 840.
7. MATERIAL: 304 STAINLESS STEEL PER QQ-S-763.
8. MATERIAL: POLYURETHANE, BLACK MIL-M-24041.
9. CONTACT CONFIGURATION: 1) 3 # 18 AWG.
   2) 9 # 20 AWG.

ITEM	NOMENCLATURE OR DESCRIPTION
1	MSG-FT SHELL 316 SST
2	#16 AWG, 18 AWG, 20 AWG CONTACT
3	MOLDED EPOXY
4	O-RING 2-019
5	EPOXY (EPON 828/CIBA 840)
6	NEOPRENE MOLDED (POLYURETHANE OPTIONAL)
7	CABLE
8	3/4-16 UNF-2B NUT (OPTIONAL)

MOUNTING INSTRUCTIONS.

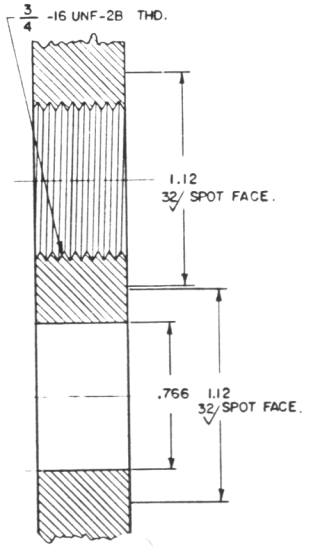

ITEM	QTY REQD	FSCM NO	PART OR IDENTIFYING NO.	NOMENCLATURE OR DESCRIPTION	MATERIAL SPECIFICATION #
8	—	15789	————	3/4-16 UNF 2B NUT (OPTIONAL)	7
7	AR	—	————	CABLE	—
6	AR	—	————	NEOPRENE MOLDED (POLYURETHANE OPTIONAL)	5 OR 8
5	AR	—	————	EPOXY	6
4	1	—	2-019	O-RING	4
3	AR	—	————	MOLD EPOXY	3
2	AR	15789	B/A 3411/3434	#16/18 & 20 AWG. CONTACT	2
1	1	15789	B/A 5905	MSG-FT	1

PARTS LIST SEA CON®

ASSY HARDWARE	PART NO.
APPLICATION	

UNLESS OTHERWISE SPECIFIED DIMENSIONS ARE IN INCHES
TOLERANCES ARE:
FRACTIONS ± 1/32 DECIMALS .XX ± .015 .XXX ± .005 ANGLES ± 1/2°

MATERIAL SEE NOTES
FINISH 125

DO NOT SCALE DRAWING

CONTRACT NO.

APPROVALS	DATE
DRAWN Les Pharm	Nov. 30, 82
CHECKED	4-5-84
ISSUED	

BRANTNER & ASSOCIATES, Inc.
MAIN PLANT 3601 HANCOCK ST. SAN DIEGO, CALIF. 92110

MSG-FT & ASSY.

SIZE	FSCM NO.	DWG. NO.	REV.
C	15789	6175-0	C

SCALE NONE SHEET

65-4 (REV 032098)

BISHOP GRAPHICS/ACCUPRESS REORDER NO. A17888

PRESSURE BALANCED, OIL-FILLED ELECTRICAL CONNECTOR SYSTEMS

Pressure balanced, oil-filled connector/cable assemblies are recommended when maximum reliability is required.

How They Work - The oil-regulating valve located in the plug body opens when the connectors are mated, seals when they are disengaged.

The electrical contacts are hermetically sealed within the bulkhead connector body to resist open face pressure.

Clear tubing containing the insulated conductors is filled with an insulating oil and installled to the connectors.

When the plug/receptacle are mated, oil flows thru the opened valve in the plug body and fills the connector interface area. The whole system is thus pressure balanced (equalized) to this point.



CONNECTOR BODIES
Our SEA CON® non-metallic connectors are made of a high density glass reinforced epoxy. This same material is also used to manufacture our standard line of non-metallic connectors. It is a proven material for underwater use, features good mechanical stability, extremely low water absorbtion and is an excellent dielectric material.

The standard material for our metallic line of PBOF connectors is 316 stainless steel, passivated. The CCP coupling nut is bronze.

TUBING
The most popular type tubing used for the PBOF systems is made of clear modified vinyl, developed especially to maintain its physical properties in contact with fuels, oil, and lubricants. This clear tubing will last appproximately 12 to 18 months in sea water without degradation. An opaque orange tubing is also available which lasts 24 months in sea water.

OIL
An insulating type, mild oil is recommended such as a transformer or turbine oil which feature a high dielectric strength.

FASTENERS
The tubing can be secured to the connector with a variety of commercially available clamps.

PRESSURE BALANCED, OIL-FILLED ELECTRICAL CONNECTOR SYSTEMS

SOME ADVANTAGES OF A PRESSURE BALANCED, OIL-FILLED SYSTEM:

The cable connector plug (CCP) is easily assembled in the field since no potting or molding is required.

Connector interface 'O' ring seal responsibility is reduced to the restriction of oil leakage since pressures in and out are equalized.

Various cable combinations are easily obtainable since assembly consists merely of installing insulated conductors within commercially available tubing, securing to the connector shell by tying with waxed nylon string, and filling with oil.

Troublesome void-free potting within connector shells is eliminated.

Since conventional molding of the connector to a cable is not necessary in this type of system, problems such as opens caused by wires being broken or pulled out of the terminals and undue stress being placed on the conductor terminations are elimanated.

Connector flaws and cable jacket pin holes or cracks become obvious prior to usage, evidenced by the leakage of oil.

Should the cable jacket be cut during use the system would continue to operate for a considerable period of time until the oil would be forced out.

The need to x-ray connectors for the purpose of discovering any possible conductor damage or serious misalignment is almost completely eliminated.

Fatique and failure of termination joints caused by pressure cycling is non-existant since this pressure compensated system eliminates the pistoning action of the conductors.

Rapid and inexpensive cable repair can be accomplished in the field.



MNG-BCR-CCP-PBOF
PRESSURED BALANCED, OIL-FIELD SERIES

Material: Glass Reinforced Epoxy
Pressure Rating: 3,500 psi

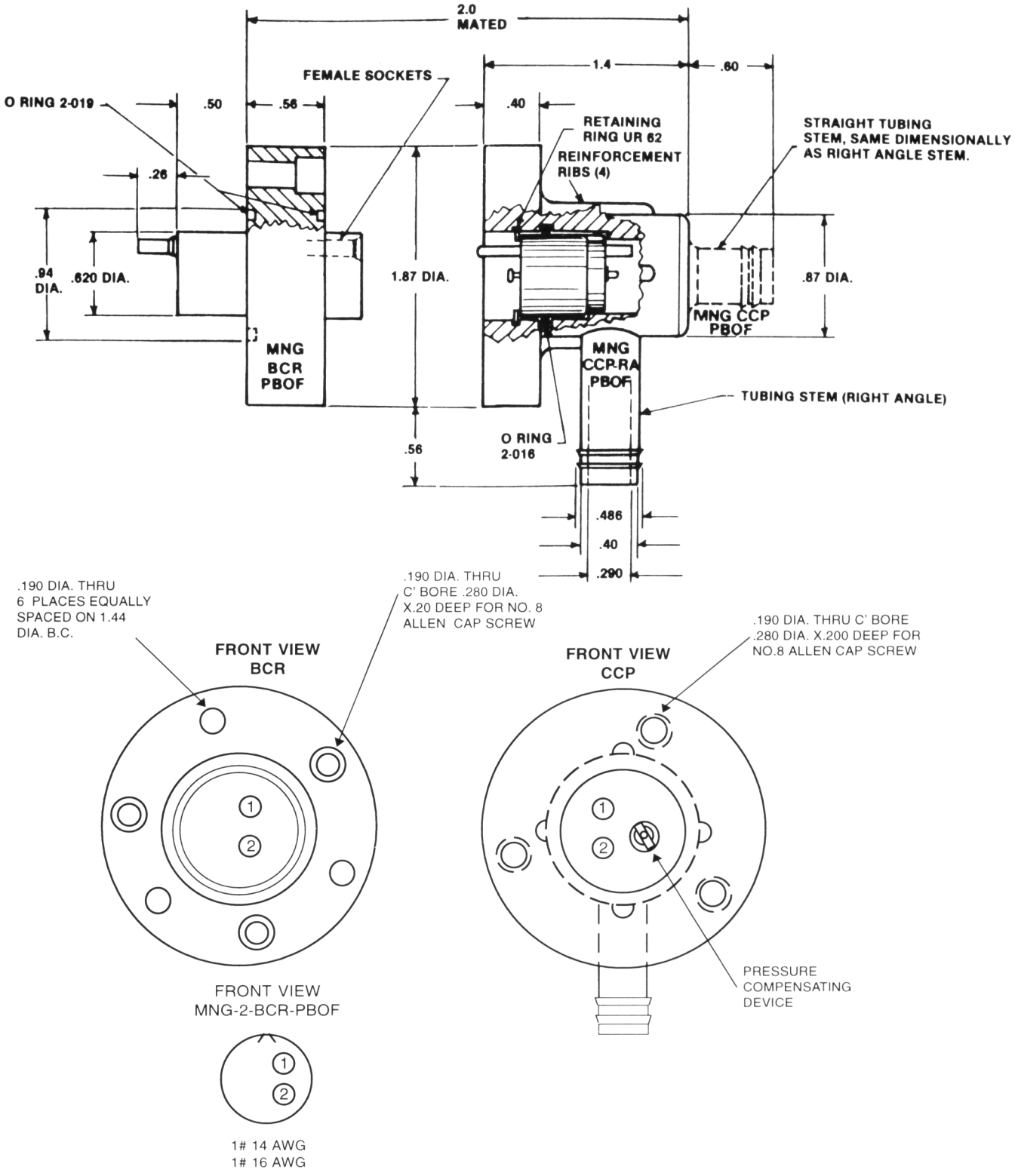

MNL-BCR-CCP-PBOF
PRESSURED BALANCED, OIL-FIELD SERIES

Material: Glass Reinforced Epoxy
Pressure Rating: 3,500 psi

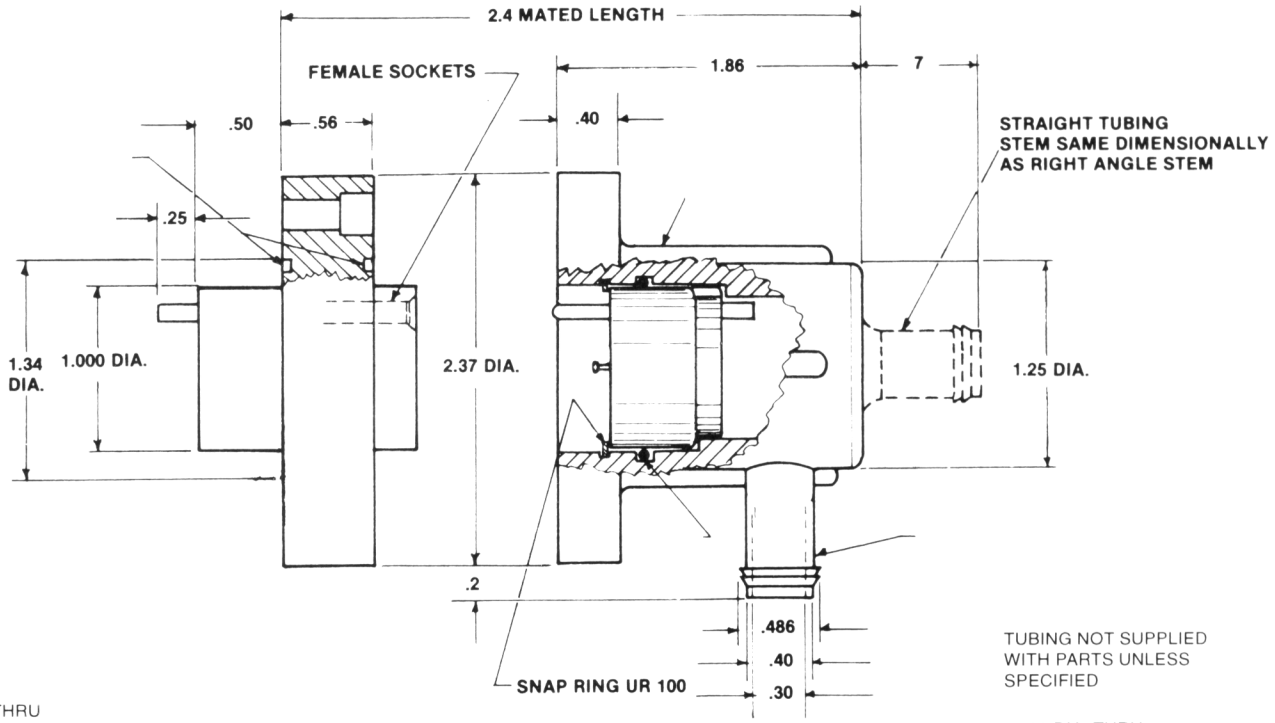

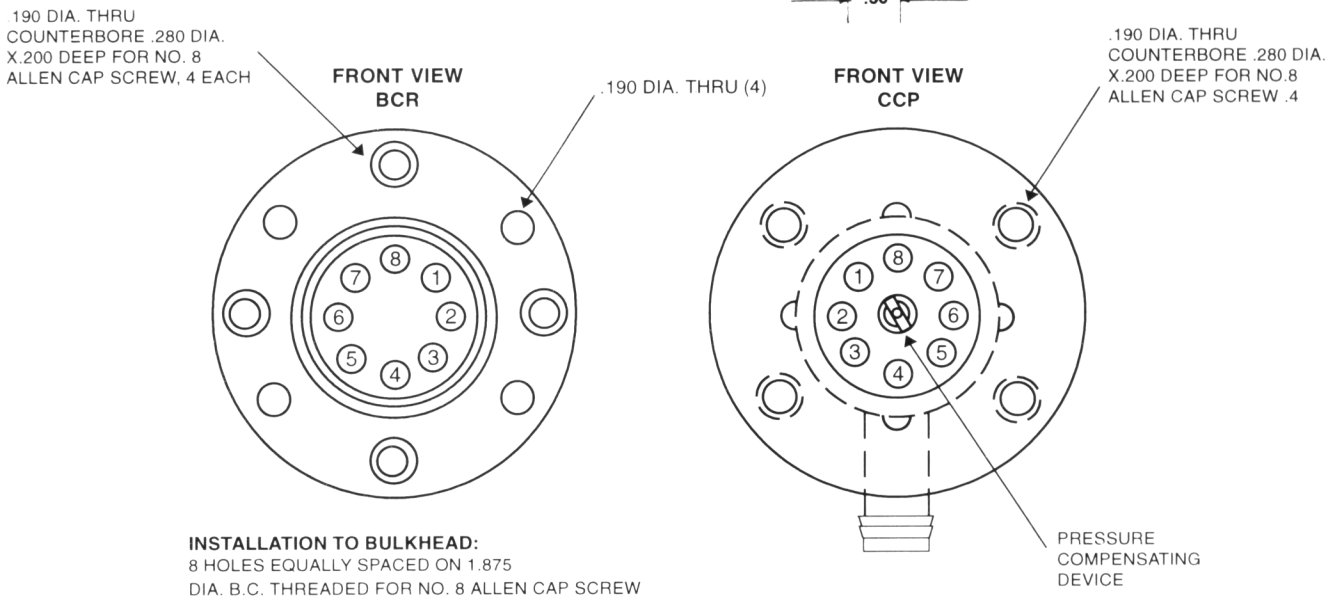

MNL-8-BCR-PBOF MNL-4-BCR-PBOF

CONTACT CONFIGURATIONS

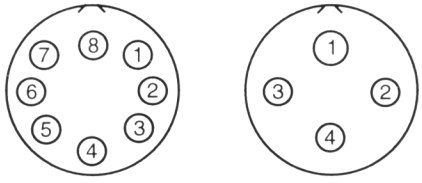

8 { 1# 14 AWG
7# 16 AWG

FRONT VIEW-BCR

4 { 1# 8 AWG
3# 10 AWG

FRONT VIEW-BCR

XSL-BCR-CCP-PBOF
PRESSURED BALANCED, OIL-FIELD SERIES

Material: Glass Reinforced Epoxy
Pressure Rating: 10,000 psi

*Also available in 2 5/8" Thread Length.

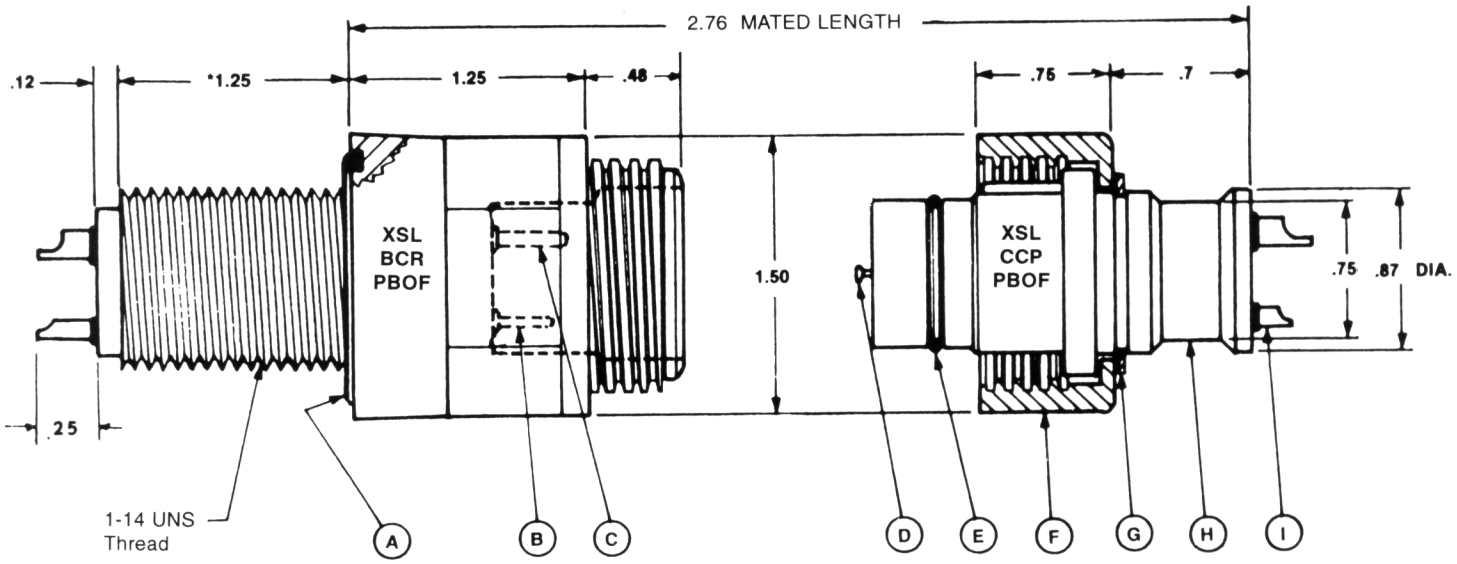

A - O-Ring 2-123
B - Male Pin (small)
C - Male Pin (large)
D - Oil Compensating Valve
E - O-Ring 2-017
F - Engaging Nut
G - Retaining Ring 5100-87H
H - Diameter on body for tubing termination
I - Solder Pots

Note: Recommended Tubing Size: .75 ID
Tubing not supplied with parts unless specified.

AVAILABLE CONTACT CONFIGURATIONS

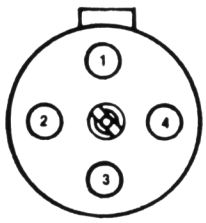

FRONT VIEW
XSL-4-CCP-PBOF
(4# 10 AWG)

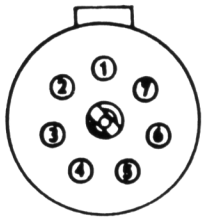

FRONT VIEW
XSL-7-CCP-PBOF
(7# 16 AWG)

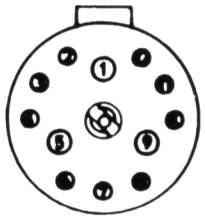

FRONT VIEW
XSL-12-CCP-PBOF
12 { 3# 16 AWG
9# 20 AWG

New Available Configurations:
XSL-5-PBOF
(1 #14 AWG plus 4 #16 AWG).
Thread Length: 1"

XSL-8-PBOF
1 #14 AWG
7 #16 AWG

Note: Torque values referenced in this literature assume insttallation into dry metal threads. Please contact the factory for recommendations.

SEA CON A

METAL SHELL - PBOF SERIES
PRESSURED BALANCED, OIL-FIELD SERIES

MSS-BCR-PBOF (mates with MSS-CCP-PBOF)

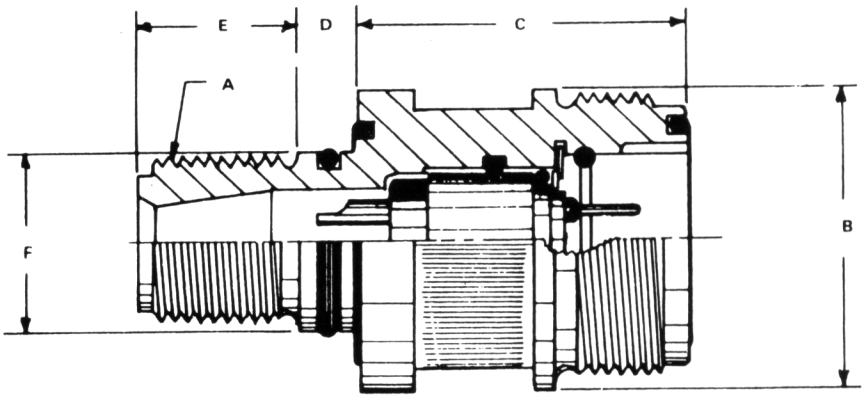

Specifications:
Body Material: 316 SST
Insert: Glass Reinforced Epoxy
Contacts: Brass, gold plated

Pressure Rating: 7,500 psi
2,500 psi or more requires the BCR to be back potted or pressure balanced on solder cup side of insert.

For details on Specifications, Materials and Options please refer to MS Series.

The short pin in the CCP contact insert opens the check valve in the CCP assembly when mated, thus accomplishing complete pressure balancing, completely eliminating the pistoning effect of conductors during pressurization.

Tubing stems are designed to fit standard tubing sizes.

Pressure Balanced Oil Filled Series
The unique Brantner & Associates Inc. valve assembly allows oil into connector interface area when mated, seals when unmated.

RECEPTACLE PART NO.	A	B	C	D	E	F
*MSS-K-BCR-PBOF	1-14NS-2A	1.87	2.0	.375	1.00	1.060
MSSL-BCR-PBOF	1-1/4-12UN-2A	2.12	2.0	.375	1.00	1.310
MSSM-BCR-PBOF	1-3/4-12UN-2A	2.75	2.25	.500	.870	1.997
MSSO-BCR-PBOF	2-1/4-12UN-2A	3.50	2.25	.500	1.250	2.497
MSSP-BCR-PBOF	2-1/2-12UN-2A	3.75	2.25	.500	1.500	2.747
MSS-Q-BCR-PBOF	2-3/4-12UN-2A	4.50	2.25	.750	1.750	3.122

*These parts are standard requiring no set-up charge.
These parts where asterisks do not appear may require set-up charges and longer deliveries.
Refer to page 70-8 for available contact configurations.

SEA CON A

MSS PBOF SERIES
MSS-CCP-PBOF MATES WITH MSS-BCR OR CCR-PBOF

Specifications:
Body Material: 316 SST
Nut: Bronze
Insert: Glass Reinforced Epoxy
Contacts: Brass, gold plated

Pressure Rating: 7,500 psi

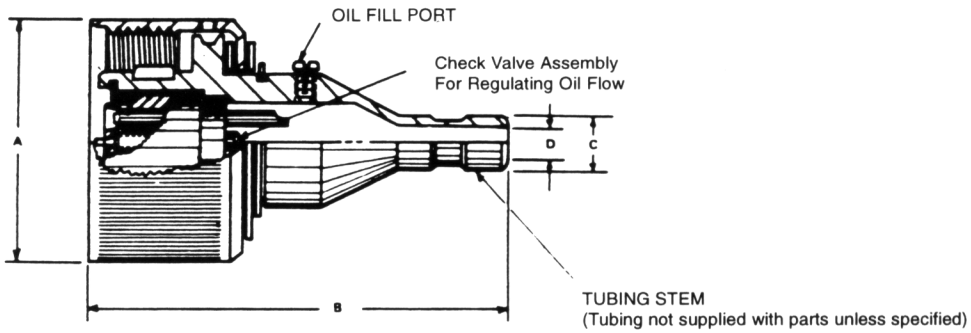

MSS-CCP-PBOF-RA (Right Angle)

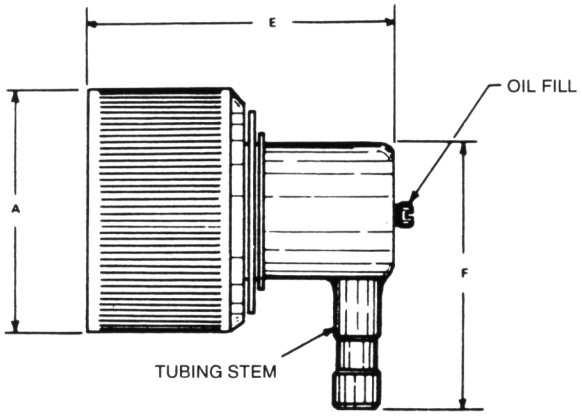

CABLE PLUG PART NO.	A	B	C	D	E	F
MSS-CCP-PBOF	1.87	3.00	.672	.48	2.37	2.12
MSSL-CCP-PBOF	2.12	3.75	.844	.62	2.82	2.56
MSSM-CCP-PBOF	2.50	5.00	.844	.62	3.26	3.00
MSSO-CCP-PBOF	3.00	5.81	1.000	.82	3.50	3.75
MSSP-CCP-PBOF	3.25	6.62	1.000	.82	3.37	3.75
MSSQ-CCP-PBOF	3.87	7.00	1.250	1.06	4.19	4.12

Refer to page 70-8 for available contact configurations.

SEACON A

SEA CON ®

MSS PBOF SERIES CONTACT CONFIGURATIONS

G



K

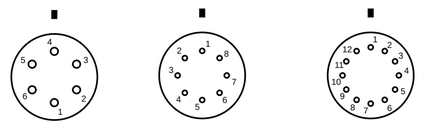

6#16 | 8#20 | 12#20

L

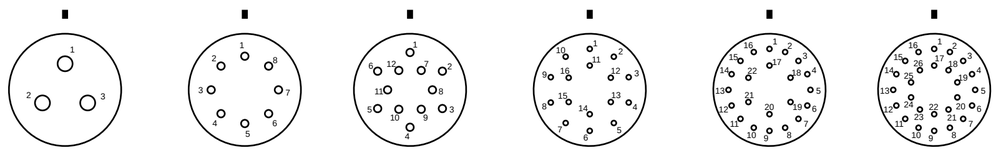

3#10 | 8#16 | 12#16 | 16#20 | 22#20 | 26#20

M

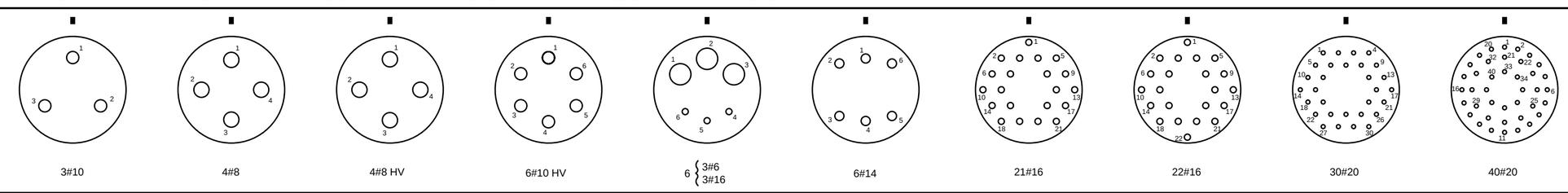

3#10 | 4#8 | 4#8 HV | 6#10 HV | 6 { 3#6 / 3#16 } | 6#14 | 21#16 | 22#16 | 30#20 | 40#20

O

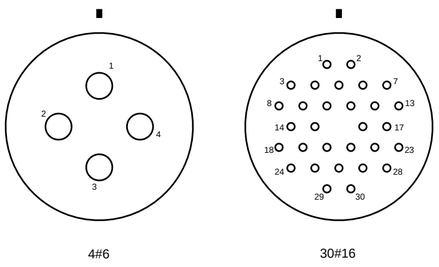

4#6 | 30#16

P

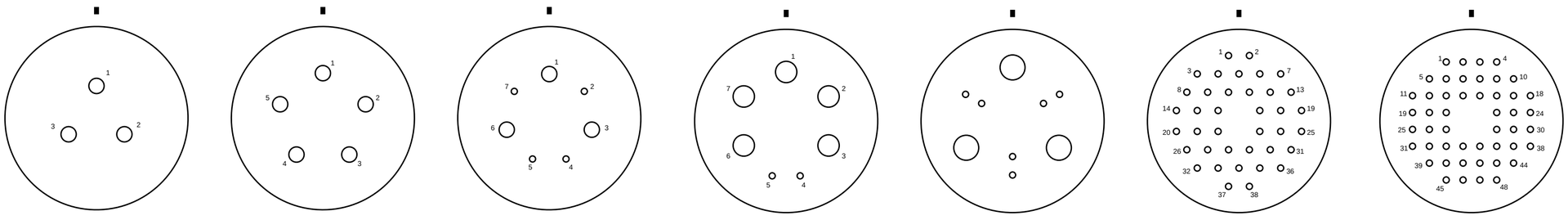

3#8 | 5#8 | 7 { 4#16 / 3#8 } | 7 { 2#16 / 5#6 } | 9 { 3#6 / 6#16 } | 38#16 | 48#16

Q

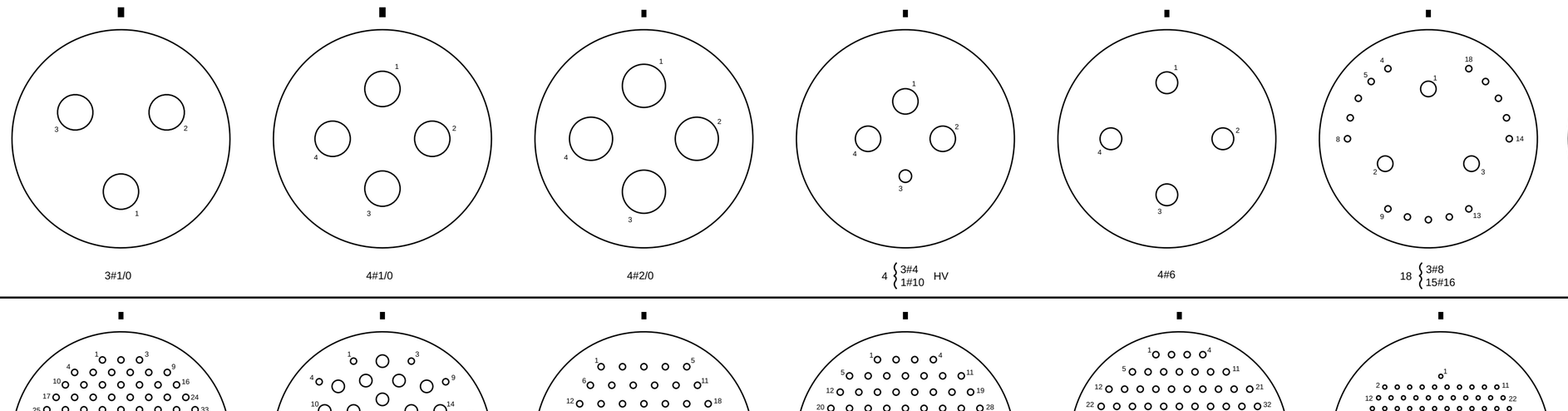

3#1/0 | 4#1/0 | 4#2/0 | 4 { 3#4 / 1#10 } HV | 4#6 | 18 { 3#8 / 15#16 } | 25#16

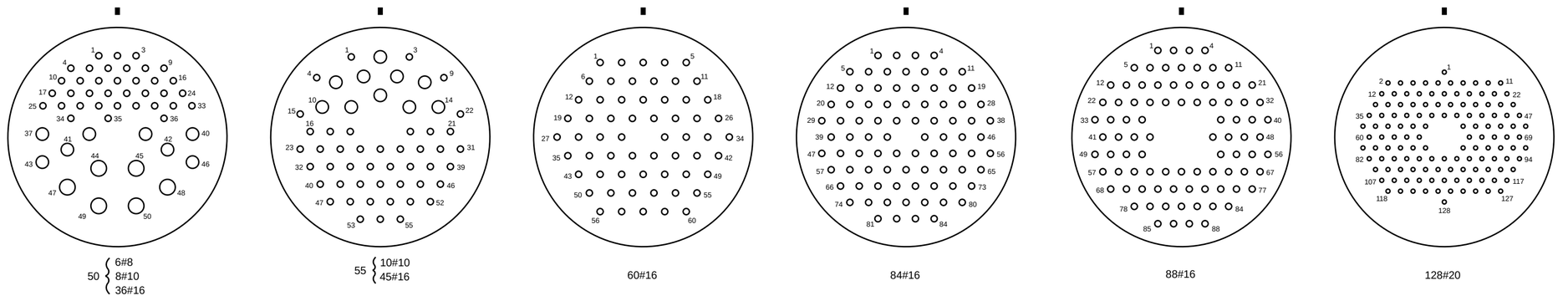

50 { 6#8 / 8#10 / 36#16 } | 55 { 10#10 / 45#16 } | 60#16 | 84#16 | 88#16 | 128#20

R

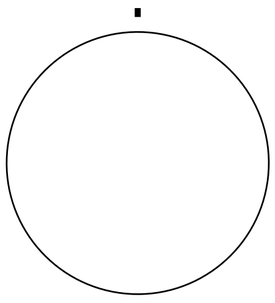

S

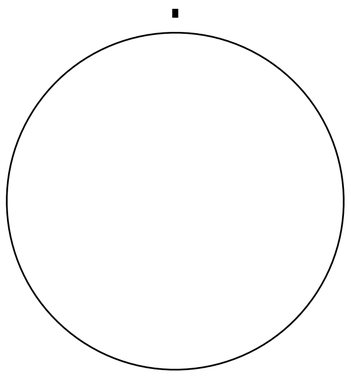

ALL CONFIGURATIONS SHOWN ARE THE FACE VIEW OF THE RECEPTACLE CONNECTOR (BCR/FCR/CCR).

▮ THIS SYMBOL REFERS TO THE RECEPTACLE SHELL KEYWAY WHICH KEYS THE BCR, FCR, CCR SHELL TO THE MATING CCP SHELL.

PBOF IS THE ABBREVIATION FOR PRESSURE BALANCED OIL FILLED STYLE CONNECTORS, REFERENCE CATALOG FOR MORE INFORMATION.

A

SEA CON®/BRANTNER & ASSOCIATES, INC. MJ 940121

MINI-CON™ PRESSURE BALANCED OIL-FILLED (PBOF)

The MINI-CON™ series has expanded into our PBOF range of connectors to allow for easy field repairs and length adjustments on short cable assemblies. The MINI-CON™ PBOF series does not utilize a valve in the cable plug. Therefore, the connector interface does not flood with oil through an orifice but, traces of oil may be visible after pressurization. Elimination of the valve enables the MINI-CON™ characteristics (a high density-small diameter) to be used in the PBOF system. The pressure range for the PBOF series is shown on Page 30-10.

There are two basic styles of MINI-CON™ PBOF cable connector plugs (CCP): straight and right angles (R/A). Additionaly, SEA CON® has developed 30˚and 45˚ CCP-PBOF for use where cable packaging is critically tight. We have built many PBOF connectors for tubing sizes other than our standard. WYE transitions and PBOF to rubber molded transitions have also been furnished by SEA CON®.

Mating connectors for the CCP PBOF are the MINI-CON™ Bulkhead connector receptacle (BCR-PBOF), flange connector receptacle (FCR-PBOF), and cable connector receptacle (CCR-PBOF). The BCR and FCR connectors have identical dimensions to our standard connectors, but additional steps are taken to ensure that they are capable of handling the extra stresses that are imposed by the PBOF system. Be sure to state BCR-PBOF or FCR-PBOF when ordering Bulkhead connectors for this system. The CCR-PBOF is designed to use the same size tubing as the corresponding CCP-PBOF. However, other tubing sizes can be accomodated by special order.

Some advantages of a Pressure Balanced, Oil Filled System:

- The cable connector plug (CCP-PBOF) and cable connector receptacle (CCR-PBOF) are easily assembled in the field as no potting or molding is required.
- Since conventional molding of the connector to the cable is not necessary in this system, problems such as open circuits caused by wires being broken or pulled out of the terminals, and undue stress being placed on the conductor's terminations are eliminated.
- Fatigue and failure of termination joints caused by pressure cycling is nonexistent because the PBOF pressure compensated system eliminates the pistoning action of conductors.
- Various cable combinations are easily obtainable since assembly consists merely of installing insulated conductors within commercially available tubing, securing to the connector shell with hose clamps, and filling with oil.
- Pin holes or cracks in the tubing become obvious prior to usage, evidenced by the leakage of oil.
- Should the tubing be cut during use the system would continue to operate for a considerable period of time until the oil is forced out.
- Rapid and inexpensive cable repair can be accomplished in the field.
- For more information on Mini-Con™ Series, please refer to Section 30.



MINI-CON™ CABLE CONNECTOR PLUG (CCP-PBOF)

CCP-PBOF(MATES TO BCR-PBOF/FCR-PBOF/CCR-PBOF)

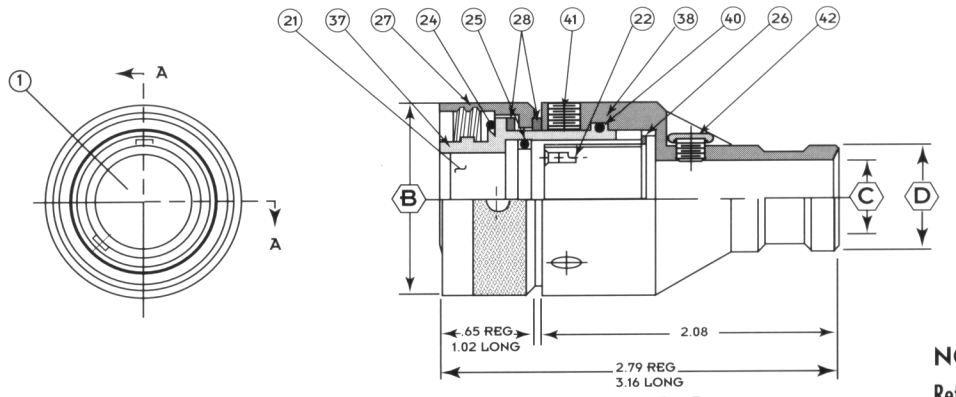

SECTION A- A

WHEN ORDERING MIN-CCP-PBOF YOU RECEIVE: 21 22 24 25 26 27 28 37 38 40 41 42

NOTE:
Reference pages 30-26 – 30-29 for pattern availability.

PART NAME	B INCHES	C INCHES	D INCHES	24 O-RING	25 O-RING	26 SPIROLOX	40 O-RING	RECOMMENDED TUBE I.D. SIZE
MING-CCP-PBOF	1.00	0.50	0.62	2-015	2-013	UR56	2-017	0.50
MINK-CCP-PBOF	1.12	0.50	0.62	2-017	2-015	UR68	2-116	0.50
MINL-CCP-PBOF	1.25	0.56	0.75	2-019	2-016	UR75	2-020	0.63
MINM-CCP-PBOF	1.37	0.56	0.75	2-020	2-018	UR87	2-022	0.63
MINO-CCP-PBOF	1.62	0.94	1.12	2-024	2-020	UR100	2-025	1.00
MINP-CCP-PBOF	1.75	0.94	1.12	2-027	2-022	UR112	2-027	1.00
MINQ-CCP-PBOF	1.87	1.06	1.25	2-028	2-025	UR131	2-029	1.13
MINR-CCP-PBOF	2.00	1.06	1.25	2-029	2-026	UR137	5-009	1.13

MINI-CON™ CABLE CONNECTOR PLUG (CCP-PBOF-R/A)

CCP-PBOF-R/A(MATES TO BCR-PBOF/FCR-PBOF/CCR-PBOF)

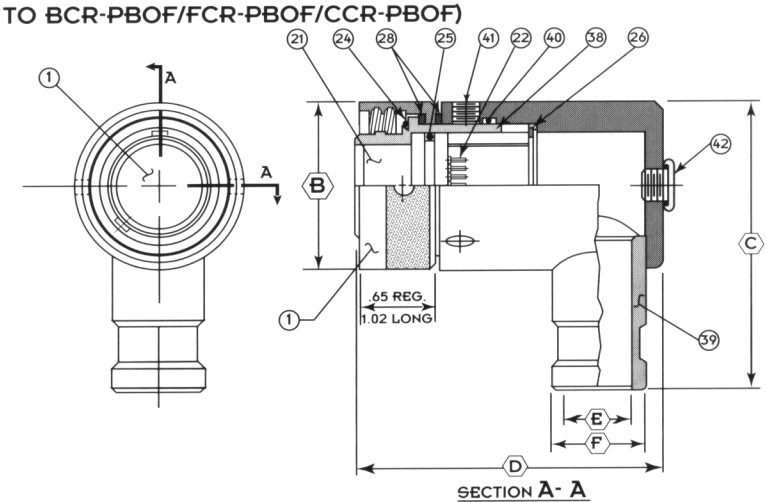

SECTION A- A

NOTE:
Reference pages 30-26 – 30-29 for pattern availability.

WHEN ORDERING MIN-CCP-PBOF-R/A YOU RECEIVE: 21 22 24 25 26 27 28 38 39 40 41 42

PART NAME	B INCHES	C INCHES	D INCHES STD	D INCHES LONG	E INCHES	F INCHES	24 O-RING	25 O-RING	26 SPIROLOX	40 O-RING	RECOMMENDED TUBE I.D. SIZE
MING-CCP-R/A-PBOF	1.00	2.20	2.37	2.75	0.50	0.62	2-015	2-013	UR56	2-017	0.50
MINK-CCP-R/A-PBOF	1.12	2.20	2.37	2.75	0.50	0.62	2-017	2-015	UR68	2-116	0.50
MINL-CCP-R/A-PBOF	1.25	2.37	2.50	2.87	0.56	0.75	2-019	2-016	UR75	2-020	0.63
MINM-CCP-R/A-PBOF	1.37	2.37	2.50	2.87	0.56	0.75	2-020	2-018	UR87	2-022	0.63
MINO-CCP-R/A-PBOF	1.62	3.00	3.03	3.40	0.94	1.12	2-024	2-020	UR100	2-025	1.00
MINP-CCP-R/A-PBOF	1.75	3.00	3.03	3.40	0.94	1.12	2-027	2-022	UR112	2-027	1.00
MINQ-CCP-R/A-PBOF	1.87	3.20	3.15	3.52	1.06	1.25	2-028	2-025	UR131	2-029	1.13
MINR-CCP-R/A-PBOF	2.00	3.20	3.15	3.52	1.06	1.25	2-029	2-026	UR137	5-009	1.13

MINI-CON™ CABLE CONNECTOR RECEPTACLE (CCR-PBOF)

CCR-PBOF (MATES TO CCP PBOF/CCP-PBOF-R/A)

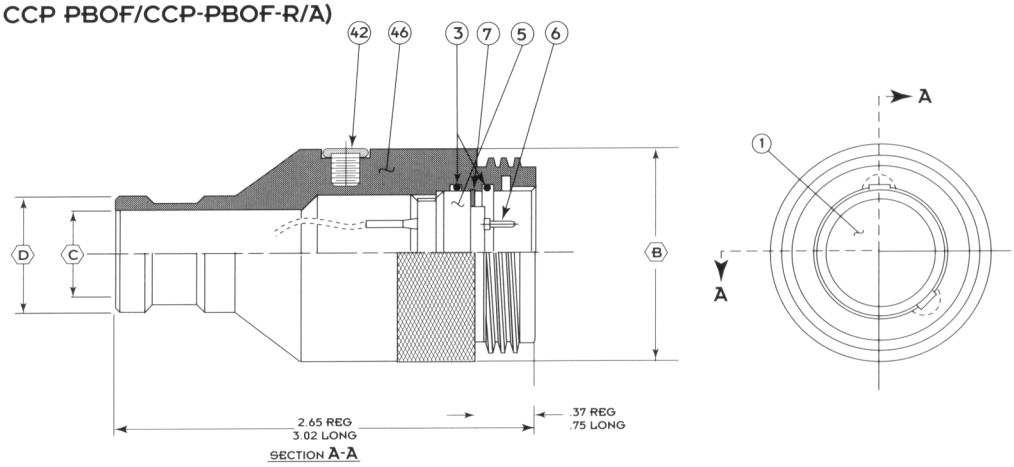

WHEN ORDERING MIN-CCR-PBOF YOU RECEIVE: (3)(5)(6)(7)(42)(46)

PART NAME	(B) INCHES	(C) INCHES	(D) INCHES	(7) SPIROLOX	(3) O-RING	RECOMMENDED TUBE I.D. SIZE
MING-CCR-PBOF	**1.00**	**0.50**	**0.62**	**UR50**	**2-014**	**0.50**
MINK-CCR-PBOF	1.12	0.50	0.62	UR62	2-016	0.50
MINL-CCR-PBOF	**1.25**	**0.56**	**0.75**	**UR75**	**2-018**	**0.62**
MINM-CCR-PBOF	1.37	0.56	0.75	UR81	2-019	0.62
MINO-CCR-PBOF	**1.62**	**0.94**	**1.12**	**UR106**	**2-023**	**1.00**
MINP-CCR-PBOF	1.75	0.94	1.12	UR118	2-025	1.00
MINQ-CCR-PBOF	**1.87**	**1.06**	**1.25**	**UR137**	**2-028**	**1.12**
MINR-CCR-PBOF	2.00	1.06	1.25	UR150	2-029	1.12

SEA CON®/PHOENIX, INC.
MIL-C-24231 SERIES

SEA CON®/Phoenix M24231 series connectors are manufactured and tested in accordance with the strict requirements of MIL-C-24231 (Navy). They are available in all standard shell sizes and contact configurations, ranging from 3 pin to 40 pin. As with all SEA CON®/Phoenix connectors, plugs can be supplied terminated and molded into water-proof cable assemblies or supplied in kit form.
SEA CON®/Phoenix also offers a metal shell GRE overcoated version for applications where cathodic delamination is a problem. This version also offers a GRE backed polyurethane insert which eliminates water leakage through the connector when cable damage occurs. Choose one of the standard shell configurations or have one custom designed for your particular requirement. SEA CON®/Phoenix design engineers are available for consultation.

Materials

Item	Plug	Receptacle	Fittings	Specification
Shell	Ni-Copper	Ni-Copper	Ni-Al-Copper	QQ-N-281 QQ-N-286
Coupling	Ni-Al-BRZ			ASTM B150
Insulator	Polyurethane	Epoxy		
Contact	Copper	Alloy	Copper Alloy	
Plating	Gold	Gold	Gold	MIL-G-45204

Electrical Data

Insulation Resistance: 2,000 megohms or greater when measured between any pair of contacts and between contacts and shell using 500 volts DC test. Shield to ground 100 megohms.

High Potential: As indicated by the applicable cable specification or 1,600 volts (RMS) 60 hertz, whichever is lower, applied between any two adjacent contacts or between receptacle or plug shell and any contact, for a duration of one minute.

Contact Rating:

Size	Test Current (Amps)
16	13

Environmental Data

Hydrostatic pressure: 2,000 psi

CONNECTOR, PLUG, STRAIGHT – MIL-C-24231

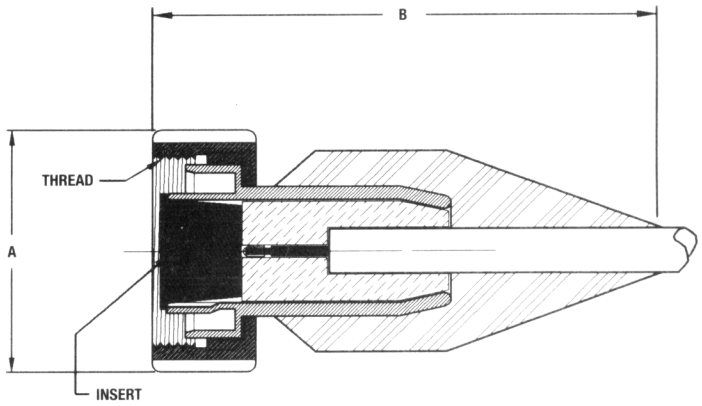

SEA CON®/PHOENIX PART NUMBER	MILITARY PART NUMBER	SYMBOL NUMBER	"A" DIM	"B" DIM	THREAD UN-2B	INSERT (SOCKET)
CP1413-3	M24231/1-001	713	2.00	5.21	1.688-12	3 EA. #16
CP1413-4	M24231/1-002	713.6	2.00	5.21	1.688-12	4 EA. #16
CP1413-5	M24231/1-003	N/A	2.00	5.21	1.688-12	5 EA. #16
CP1414-7	M24231/3-001	713.1	2.50	5.21	2.000-12	7 EA. #16
CP1414-9	M24231/3-002	713.7	2.50	5.21	2.000-12	9 EA. #16
CP1415-6	N/A	N/A	3.37	6.09	2.750-12	6 EA. #16
CP1415-14	M24231/4-001	713.2	3.37	6.09	2.750-12	14 EA. #16
CP1415-24	M24231/4-002	713.3	3.37	6.09	2.750-12	24 EA. #16
CP1415-30	M24231/4-003	713.4	3.37	6.09	2.750-12	30 EA. #16
CP1415-40	M24231/4-004	713.10	3.37	6.09	2.750-12	40 EA. #16
CP1414-3	M24231/23-001	713.9	2.50	5.21	2.000-12	3 EA. #12

CONFIGURATIONS AVAILABLE

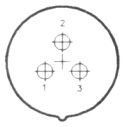

3 #16

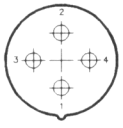

4 #16

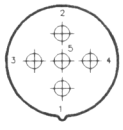

5 #16

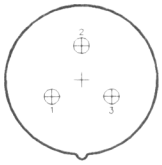

3 #12

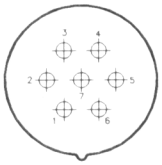

7 #16

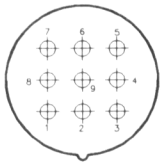

9 #16

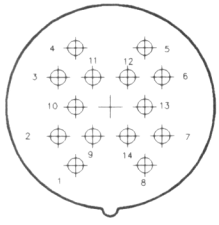

14 #16

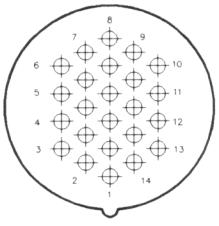

24 #16

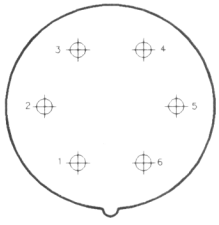

6 #16

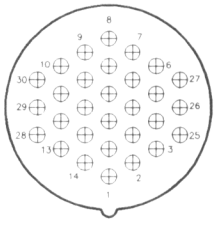

30 #16

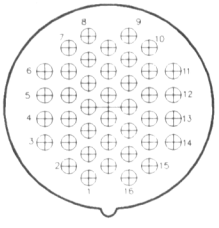

40 #16

CONNECTOR, PLUG, STRAIGHT – MIL-C-24231
GLASS REINFORCED EPOXY OVERCOAT

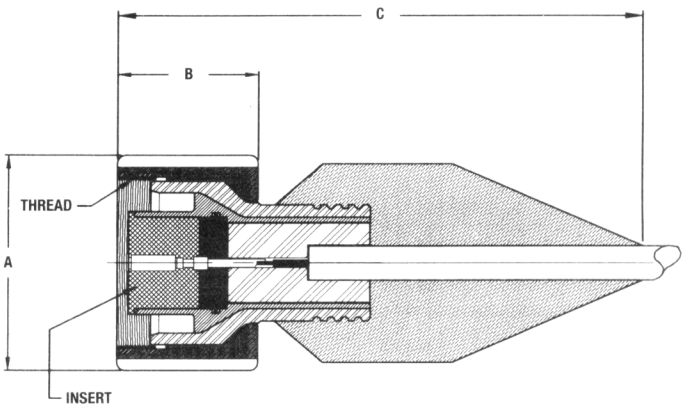

SEA CON®/PHOENIX PART NUMBER	MILITARY PART NUMBER (EQUIV.)	SYMBOL NUMBER	"A" DIM	"B" DIM	"C" DIM	THREAD UN-2B	INSERT (SOCKET)
CP1310-3	M24231/1-001	713.3	2.00	1.61	5.47	1.688-12	3 EA. #16
CP1310-4	M24231/1-002	713.6	2.00	1.61	5.47	1.688-12	4 EA. #16
CP1310-5	M24231/1-003	N/A	2.00	1.61	5.47	1.688-12	5 EA. #16
CP1311-7	M24231/3-003	713.1	2.50	1.61	5.47	2.000-12	7 EA. #16
CP1311-9	M24231/3-004	713.7	2.50	1.61	5.47	2.000-12	9 EA. #16
CP1312-6	N/A	N/A	3.37	2.06	6.03	2.750-12	6 EA. #16
CP1312-14	M24231/4-006	713.2	3.37	2.06	6.03	2.750-12	14 EA. #16
CP1312-24	M24231/4-007	713.3	3.37	2.06	6.03	2.750-12	24 EA. #16
CP1312-30	M24231/4-008	713.4	3.37	2.06	6.03	2.750-12	30 EA. #16
CP1312-40	M24231/4-009	713.10	3.37	2.06	6.03	2.750-12	40 EA. #16
CP1311-3	M24231/23-001	713.9	2.50	1.61	5.47	2.000-12	3 EA. #12

CONFIGURATIONS AVAILABLE

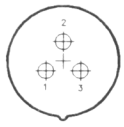

3 #16

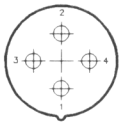

4 #16

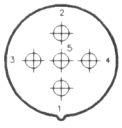

5 #16

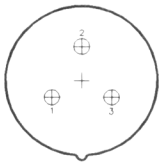

3 #12

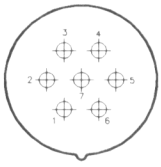

7 #16

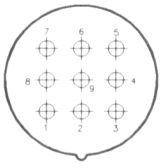

9 #16

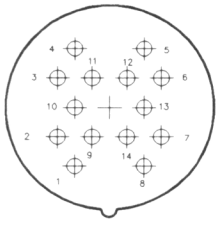

14 #16

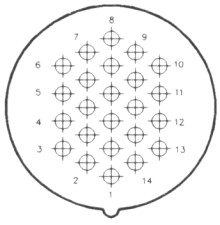

24 #16

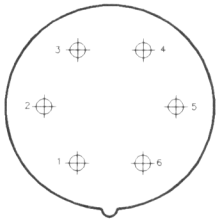

6 #16

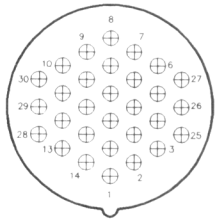

30 #16

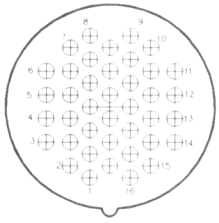

40 #16

CONNECTOR, PLUG, RIGHT ANGLE – MIL-C-24231

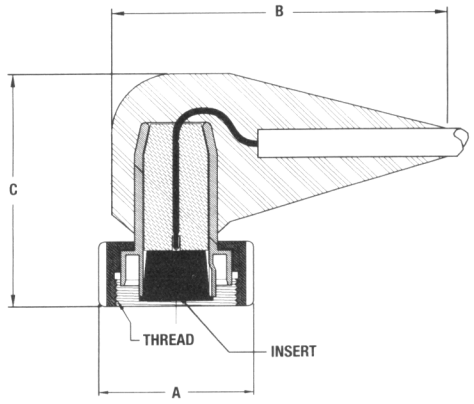

SEA CON®/PHOENIX PART NUMBER	MILITARY PART NUMBER	SYMBOL NUMBER	"A" DIM	"B" DIM	"C" DIM	THREAD UN-2B	INSERT (SOCKET)
CP1413-3-90	M24231/2-001	713.5	2.00	4.37	3.75	1.688-12	3 EA. #16
CP1413-4-90	M24231/2-002	713.8	2.00	4.37	3.75	1.688-12	4 EA. #16
CP1413-5-90	M24231/2-003	N/A	2.00	4.37	3.75	1.688-12	5 EA. #16
CP1414-7-90	M24231/3-003	N/A	2.50	4.87	3.75	2.000-12	7 EA. #16
CP1414-9-90	M24231/3-004	N/A	2.50	4.87	3.75	2.000-12	9 EA. #16
CP1415-6-90	N/A	N/A	3.37	5.43	5.37	2.750-12	6 EA. #16
CP1415-14-90	M24231/4-006	N/A	3.37	5.43	5.37	2.750-12	14 EA. #16
CP1415-24-90	M24231/4-007	N/A	3.37	5.43	5.37	2.750-12	24 EA. #16
CP1415-30-90	M24231/4-008	N/A	3.37	5.43	5.37	2.750-12	30 EA. #16
CP1415-40-90	M24231/4-009	N/A	3.37	5.43	5.37	2.750-12	40 EA. #16
CP1414-3-90	N/A	N/A	2.50	4.87	3.75	2.000-12	3 EA. #12

CONFIGURATIONS AVAILABLE

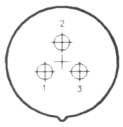

3 #16

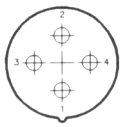

4 #16

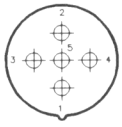

5 #16

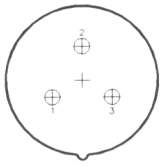

3 #12

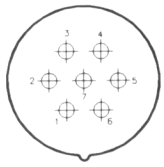

7 #16

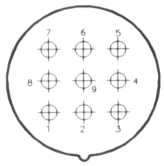

9 #16

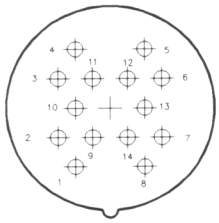

14 #16

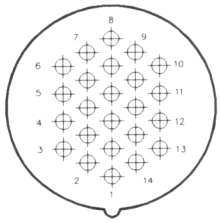

24 #16

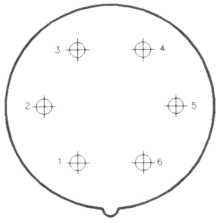

6 #16

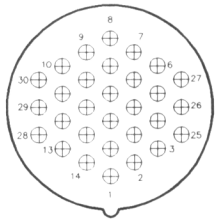

30 #16

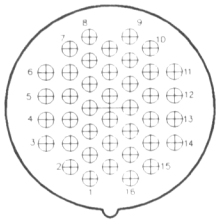

40 #16

CONNECTOR, PLUG, RIGHT ANGLE – MIL-C-24231
GLASS REINFORCED EPOXY OVERCOAT

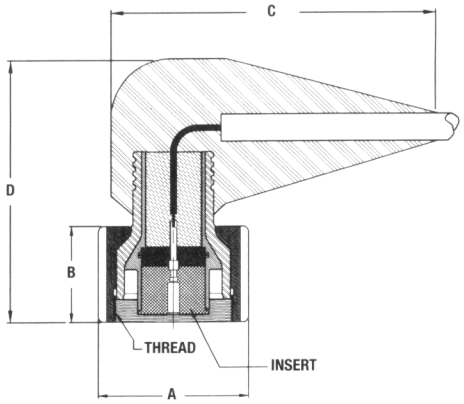

SEA CON®/PHOENIX PART NUMBER	MILITARY PART NUMBER (EQUIV.)	SYMBOL NUMBER	"A" DIM	"B" DIM	"C" DIM	"D" DIM	THREAD UN-2B	INSERT (SOCKET)
CP1310-3-90	M24231/2-001	713.5	2.00	1.61	4.93	4.18	1.688-12	3 EA. #16
CP1310-4-90	M24231/2-002	713.8	2.00	1.61	4.93	4.18	1.688-12	4 EA. #16
CP1310-5-90	M24231/2-003	N/A	2.00	1.61	4.93	4.18	1.688-12	5 EA. #16
CP1311-3-90	N/A	N/A	2.50	1.61	4.93	4.18	2.000-12	3 EA. #12
CP1311-7-90	M24231/3-003	N/A	2.50	1.61	4.93	4.18	2.000-12	7 EA. #16
CP1311-9-90	M24231/3-004	N/A	2.50	1.61	4.93	4.18	2.000-12	9 EA. #16
CP1312-6-90	N/A	N/A	3.37	2.06	5.06	4.34	2.750-12	6 EA. #16
CP1312-14-90	M24231/4-006	N/A	3.37	2.06	5.18	5.03	2.750-12	14 EA. #16
CP1312-24-90	M24231/4-007	N/A	3.37	2.06	5.18	5.03	2.750-12	24 EA. #16
CP1312-30-90	M24231/4-008	N/A	3.37	2.06	5.18	5.03	2.750-12	30 EA. #16
CP1312-40-90	M24231/4-009	N/A	3.37	2.06	5.18	5.03	2.750-12	40 EA. #16

CONFIGURATIONS AVAILABLE

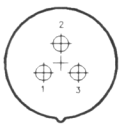

3 #16

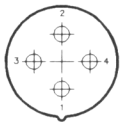

4 #16

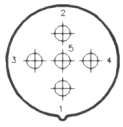

5 #16

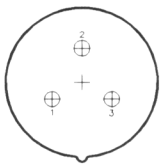

3 #12

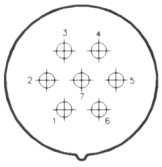

7 #16

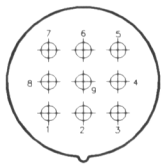

9 #16

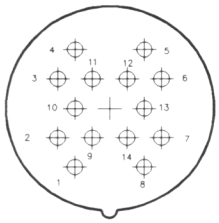

14 #16

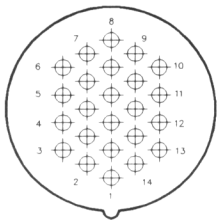

24 #16

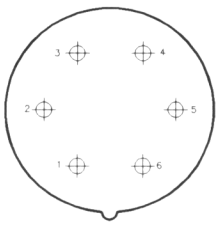

6 #16

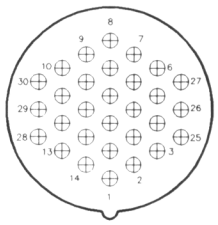

30 #16

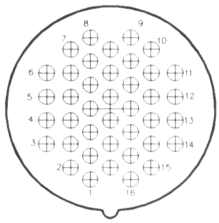

40 #16

PRESSURE-PROOF SEALING PLUG – MIL-C-24231

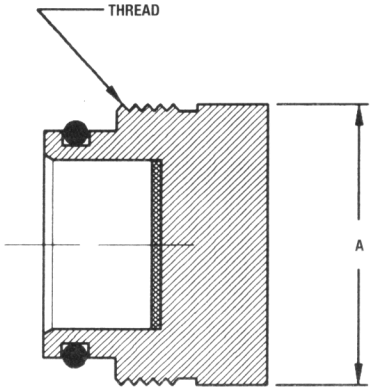

SEA CON®/PHOENIX PART NUMBER	MILITARY PART NUMBER	"A" DIM	THREAD UN-2A	FOR USE WITH SEA CON®/PHOENIX CONNECTOR PLUG
SP1437-1	M24231/1-020	1.75	1.688-12	CP1310, CP1413
SP1437-2	M24231/3-020	2.00	2.000-12	CP1311, CP1414
SP1437-3	M24231/4-020	2.75	2.750-12	CP1312, CP1415

PRESSURE-PROOF SEALING CAP – MIL-C-24231

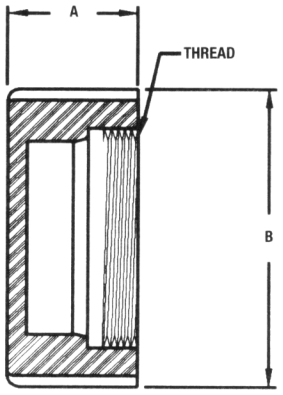

SEA CON®/PHOENIX PART NUMBER	MILITARY PART NUMBER	"A" DIM	"B" DIM	THREAD UN-2B	FOR USE WITH SEA CON®/PHOENIX CONNECTOR RECEPTACLE
SC1442-1	M24231/12-011	1.06	2.00	1.688-12	CR1438
SC1442-2	M24231/13-011	1.06	2.50	2.000-12	CR1439
SC1442-3	M24231/14-011	1.31	3.37	2.750-12	CR1440

CONNECTOR, RECEPTACLE – MIL-C-24231
MULTI-PIN, WELD MOUNT

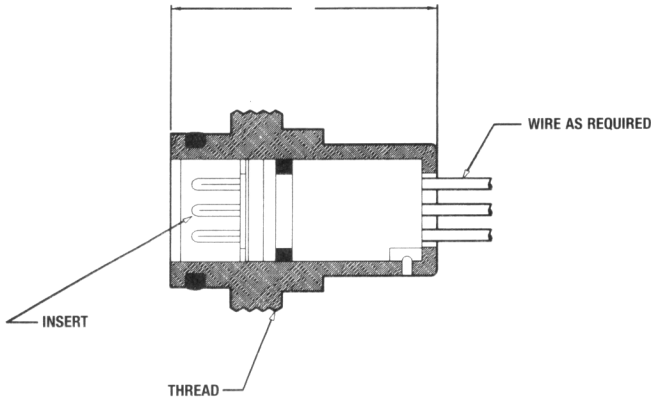

SEA CON®/PHOENIX PART NUMBER	MILITARY PART NUMBER	SYMBOL NUMBER	"A" DIM	THREAD UN-2A	INSERT (PIN)
CR1438-3	M24231/12-001 M24231/12-002	737 737.4	2.34	1.688-12	3 EA. #16
CR1438-4	M24231/12-003	737.7	2.34	1.688-12	4 EA. #16
CR1438-5	M24231/12-004	N/A	2.34	1.688-12	5 EA. #16
CR1439-7	M24231/13-001 M24231/13-002 M24231/13-003	737.1 737.6 737.9	2.34	2.000-12	7 EA. #16
CR1439-9	N/A	N/A	2.34	2.000-12	9 EA. #16
CR1440-6	N/A	N/A	2.41	2.750-12	6 EA. #16
CR1440-14	M24231/14-001	737.2	2.41	2.750-12	14 EA. #16
CR1440-24	M24231/14-002	737.3	2.41	2.750-12	24 EA. #16
CR1440-30	M24231/14-003	737.5	2.41	2.750-12	30 EA. #16
CR1440-40	M24231/14-004	737.8	2.41	2.750-12	40 EA. #16
CR1439-3	N/A	N/A	2.41	2.000-12	3 EA. #12

CONFIGURATIONS AVAILABLE

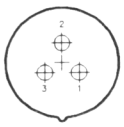
3 #16

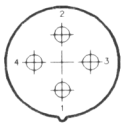
4 #16

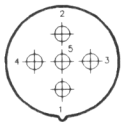
5 #16

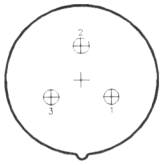
3 #12

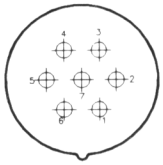
7 #16

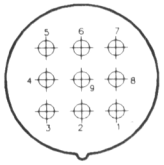
9 #16

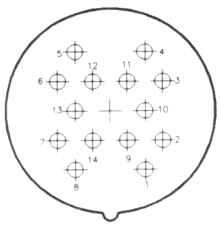
14 #16

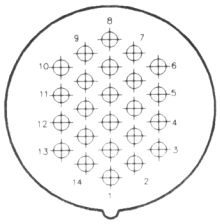
24 #16

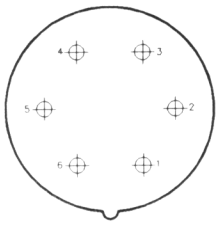
6 #16

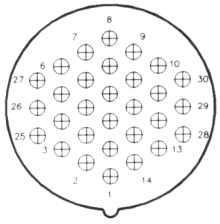
30 #16

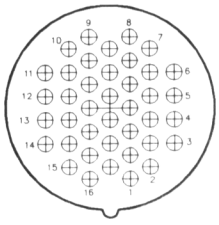
40 #16

CONNECTOR, RECEPTACLE – MIL-C-24231 MULTI-PIN, BULKHEAD FEED THRU

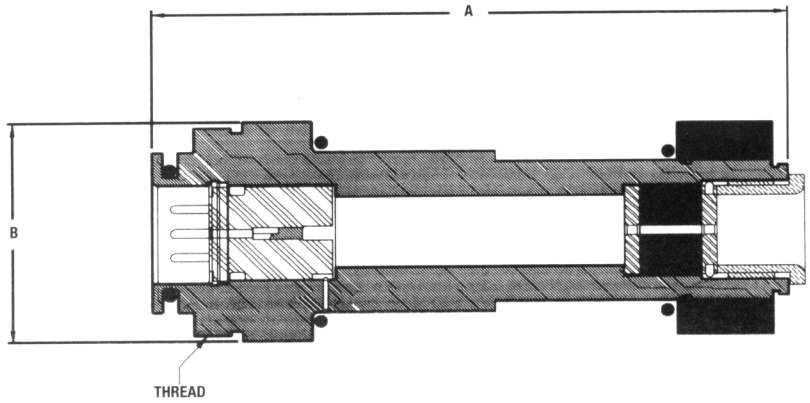

SEA CON®/PHOENIX PART NUMBER	MILITARY PART NUMBER	SYMBOL NUMBER	"A" DIM	"B" DIM	THREAD UN-2A	INSERT (PIN)
CR1452-1	M24231/5-001	517	7.71	2.75	1.688-12	3 EA. #16
CR1452-2	M24231/5-002	517.11	7.71	2.75	1.688-12	4 EA. #16
CR1452-3	M24231/5-003	N/A	7.71	2.75	1.688-12	5 EA. #16
CR1453-1	M24231/6-001	517.4	7.71	2.75	1.688-12	3 EA. #16
CR1454-1	M24231/7-001	517.1	7.71	2.75	2.000-12	7 EA. #16
CR1455-1	M24231/8-001	517.8	7.71	2.75	2.000-12	7 EA. #16
CR1455-2	M24231/8-002	517.7	7.71	2.75	2.000-12	7 EA. #16
CR1455-3	M24231/8-003	517.9	7.71	2.75	2.000-12	7 EA. #16
CR1456-1	M24231/9-001	517.5	7.71	2.75	2.000-12	7 EA. #16
CR1456-2	M24231/9-002	517.12	7.71	2.75	2.000-12	9 EA. #16
CR1456-3	M24231/9-003	N/A	7.71	2.75	2.000-12	9 EA. #16
CR1457-1	M24231/10-001	517.2	8.43	3.37	2.750-12	14 EA. #16
CR1457-2	M24231/10-002	517.3	8.43	3.37	2.750-12	24 EA. #16
CR1457-3	M24231/10-003	517.6	8.43	3.37	2.750-12	30 EA. #16
CR1457-4	M24231/10-004	N/A	8.43	3.37	2.750-12	40 EA. #16
CR1457-5	M24231/10-005	N/A	8.43	3.37	2.750-12	40 EA. #16
CR1458-1	M24231/24-001	517.13	7.71	2.75	2.000-12	3 EA. #12
CR1459-1	M24231/26-001	1270	8.43	3.37	2.750-12	14 EA. #16
CR1459-2	M24231/26-002	1270.1	8.43	3.37	2.750-12	14 EA. #16
CR1459-3	M24231/26-003	1270.2	8.43	3.37	2.750-12	24 EA. #16

CONFIGURATIONS AVAILABLE

Please refer to page 1.6 for above configurations available on the Connector, Receptacle – MIL-C-24231 Multi-Pin, Bulkhead Feed Thru.

SEA CON®/PHOENIX, INC.
MIL-C-24217 SERIES

Our M24217 series of hermetic connectors are manufactured and tested to the strict requirements of MIL-C-24217 (Navy). This series of connector is widely used in many undersea and military applications, and is also suitable for any operation where pressure, humidity, or temperature are factors of performance. A full range of receptacle mounting styles are available and contact configurations range from single coaxial to 48 size #16 conductors. As with all SEA CON®/Phoenix connectors, plugs can be supplied terminated and molded into water-proof cable assemblies or supplied in kit form. Choose one of the standard shell configurations or have one custom designed for your particular requirement. SEA CON®/Phoenix design engineers are available for consultation.

Materials

Item	Plug	Receptacle	Specification
Shell	316SS	316LSS	QQ-S-763
Coupling Ring	Ni-Al-BRZ		ASTM B150
Insulator	Delrin	Glass	
Contacts	Copper Alloy	Steel/Alloy 52	
Plating	Gold	Gold	Mil-G-45204 Type II, CL3

Electrical Data

Insulation Resistance: >5,000 megohms or greater when measured between any pair of contacts and between contacts and shell using 500 volts DC test.

High Potential: 1,880 volts (RMS) 60 hertz, applied between contacts or between receptacle or plug shell for a duration of one minute.

Contact Rating:

Size	Test Current (Amps)
16	13
12	23
8	46
4	80
0	150

Environmental Data

Hydrostatic Pressure: 10,000 psi open face - 6,500 psi mated

Thermal Shock: -65F to +165F

Physical Shock: Mil-Std 202, Method 207

Vibration: 10-2,000 hertz at 10G

RECEPTACLE ASSEMBLY – MIL-C-24217/1 WELDED TYPE

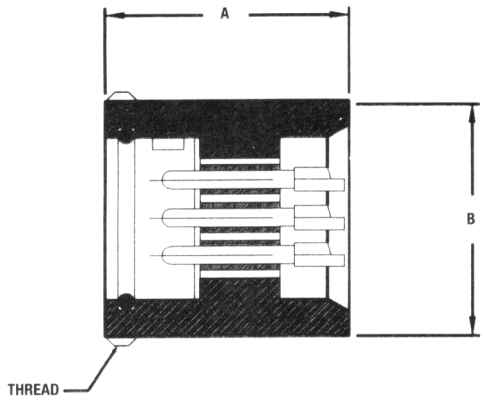

SEA CON®/PHOENIX PART NUMBER	MILITARY PART NUMBER	"A" DIM	"B" DIM	THREAD 2A	NO. OF PINS
CR1443-1	M24217/1-001	1.62	1.12	1.250-12	3 EA. #16
CR1443-2	M24217/1-002	1.74	1.37	1.500-12	5 EA. #16
CR1443-3	M24217/1-003	1.87	1.58	1.750-12	9 EA. #16
CR1443-4	M24217/1-004	1.99	1.96	2.125-12	14 EA. #16
CR1443-5	M24217/1-005	2.12	2.34	2.500-12	24 EA. #16
CR1443-6	M24217/1-006	2.12	2.87	3.000-12	37 EA. #16
CR1443-7	M24217/1-007	2.41	3.75	3.750-12	48 EA. #16
CR1443-8	M24217/1-008	2.88	1.58	1.750-12	3 EA. #12
CR1443-9	M24217/1-009	2.88	2.00	2.125-12	5 EA. #12
CR1443-10	M24217/1-010	2.88	2.31	2.500-12	9 EA. #12
CR1443-11	M24217/1-011	2.88	2.00	2.125-12	3 EA. #8
CR1443-12	M24217/1-012	2.88	2.31	2.500-12	3 EA. #4
CR1443-13	M24217/1-013	2.88	2.31	2.500-12	3 EA. #12 3 EA. #8
CR1443-14	M24217/1-014	2.88	2.87	3.000-12	2 EA. #0 4 EA. #12
CR1443-15	M24217/1-015	1.62	1.12	1.250-12	5 EA. #16 (SPECIAL)

CONFIGURATIONS AVAILABLE

Please refer to page 2.16 for above configurations available on the Receptacle Assembly – MIL-C-24217/1 Welded Type.

RECEPTACLE ASSEMBLY – MIL-C-24217/2 FLANGED-WELDED TYPE

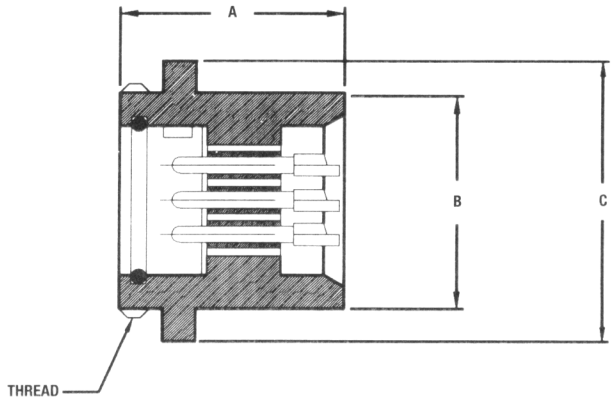

SEA CON®/PHOENIX PART NUMBER	MILITARY PART NUMBER	"A" DIM	"B" DIM	"C" DIM	THREAD 2A	NO. OF PINS
CR1444-1	M24217/2-001	1.62	1.12	1.50	1.250-12	3 EA. #16
CR1444-2	M24217/2-002	1.74	1.37	1.87	1.500-12	5 EA. #16
CR1444-3	M24217/2-003	1.87	1.58	2.06	1.750-12	9 EA. #16
CR1444-4	M24217/2-004	1.99	1.96	2.50	2.125-12	14 EA. #16
CR1444-5	M24217/2-005	2.12	2.34	2.87	2.500-12	24 EA. #16
CR1444-6	M24217/2-006	2.12	2.87	3.37	3.000-12	37 EA. #16
CR1444-7	M24217/2-007	2.41	3.75	4.25	3.750-12	48 EA. #16
CR1444-8	M24217/2-008	2.88	1.58	2.06	1.750-12	3 EA. #12
CR1444-9	M24217/2-009	2.88	2.00	2.37	2.125-12	5 EA. #12
CR1444-10	M24217/2-010	2.88	2.31	2.75	2.500-12	9 EA. #12
CR1444-11	M24217/2-011	2.88	2.00	2.37	2.125-12	3 EA. #8
CR1444-12	M24217/2-012	2.88	2.31	2.75	2.500-12	3 EA. #4
CR1444-13	M24217/2-013	2.88	2.31	2.75	2.500-12	3 EA. #12 3 EA. #8
CR1444-14	M24217/2-014	2.88	2.87	3.37	3.000-12	2 EA. #0 4 EA. #12

CONFIGURATIONS AVAILABLE

Please refer to page 2.16 for above configurations available on the Receptacle Assembly – MIL-C-24217/2 Flanged-Welded Type.

RECEPTACLE ASSEMBLY – MIL-C-24217/3 IN LINE TYPE

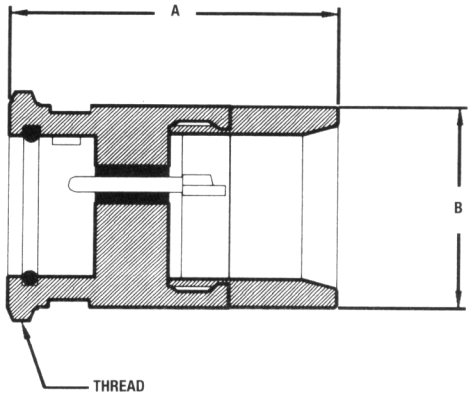

SEA CON®/PHOENIX PART NUMBER	MILITARY PART NUMBER	"A" DIM	"B" DIM	THREAD 2A	NO. OF PINS
CR1445-1	M24217/3-001	2.25	1.06	1.250-12	3 EA. #16
CR1445-2	M24217/3-002	2.61	1.18	1.500-12	5 EA. #16
CR1445-3	M24217/3-003	3.04	1.50	1.750-12	9 EA. #16
CR1445-4	M24217/3-004	3.05	1.87	2.125-12	14 EA. #16
CR1445-5	M24217/3-005	3.42	2.31	2.500-12	24 EA. #16
CR1445-6	M24217/3-006	4.36	2.81	3.000-12	37 EA. #16
CR1445-7	M24217/3-007	4.33	3.62	3.750-12	48 EA. #16
CR1445-8	M24217/3-008	3.56	1.50	1.750-12	3 EA. #12
CR1445-9	M24217/3-009	3.56	1.87	2.125-12	5 EA. #12
CR1445-10	M24217/3-010	3.87	2.25	2.500-12	9 EA. #12
CR1445-11	M24217/3-011	3.56	1.87	2.125-12	3 EA. #8
CR1445-12	M24217/3-012	3.87	2.25	2.500-12	3 EA. #4
CR1445-13	M24217/3-013	3.87	2.25	2.500-12	3 EA. #12 3 EA. #8
CR1445-14	M24217/3-014	4.10	2.75	3.000-12	2 EA. #0 4 EA. #12

CONFIGURATIONS AVAILABLE

Please refer to page 2.16 for above configurations available on the Receptacle Assembly – MIL-C-24217/3 In Line Type.

RECEPTACLE ASSEMBLY – MIL-C-24217/4 MID-FLANGED BOLTED TYPE

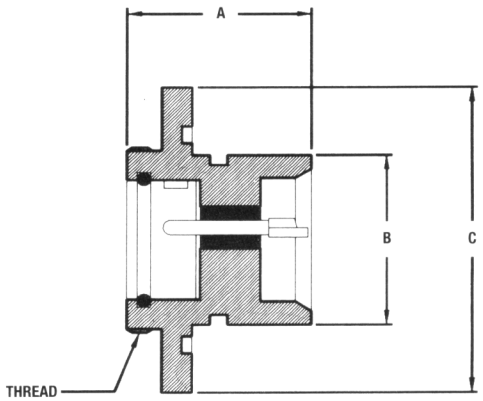

SEA CON®/PHOENIX PART NUMBER	MILITARY PART NUMBER	"A" DIM	"B" DIM	"C" DIM	THREAD 2A	NO. OF PINS
CR1446-1	M24217/4-001	1.62	1.12	2.50	1.250-12	3 EA. #16
CR1446-2	M24217/4-002	1.74	1.37	2.75	1.500-12	5 EA. #16
CR1446-3	M24217/4-003	1.87	1.49	3.00	1.750-12	9 EA. #16
CR1446-4	M24217/4-004	1.99	1.87	3.37	2.125-12	14 EA. #16
CR1446-5	M24217/4-005	2.12	2.24	3.75	2.500-12	24 EA. #16
CR1446-6	M24217/4-006	2.12	2.74	4.43	3.000-12	37 EA. #16
CR1446-7	M24217/4-007	2.41	3.49	5.00	3.750-12	48 EA. #16
CR1446-8	M24217/4-008	2.88	1.49	3.00	1.750-12	3 EA. #12
CR1446-9	M24217/4-009	2.88	1.87	3.37	2.125-12	5 EA. #12
CR1446-10	M24217/4-010	2.88	2.24	3.75	2.500-12	9 EA. #12
CR1446-11	M24217/4-011	2.88	1.87	3.37	2.125-12	3 EA. #8
CR1446-12	M24217/4-012	2.88	2.24	3.75	2.500-12	3 EA. #4
CR1446-13	M24217/4-013	2.88	2.24	3.75	2.500-12	3 EA. #12 3 EA. #8
CR1446-14	M24217/4-014	2.88	2.74	4.43	3.000-12	2 EA. #0 4 EA. #12

CONFIGURATIONS AVAILABLE

Please refer to page 2.16 for above configurations available on the Receptacle Assembly – MIL-C-24217/4 Mid-Flanged Bolted Type.

RECEPTACLE ASSEMBLY – MIL-C-24217/5 END-FLANGED BOLTED TYPE

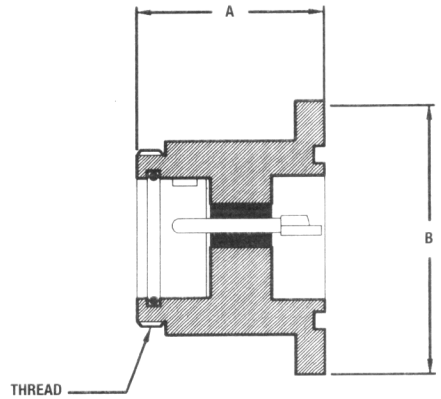

SEA CON®/PHOENIX PART NUMBER	MILITARY PART NUMBER	"A" DIM	"B" DIM	THREAD 2A	NO. OF PINS
CR1447-1	M24217/5-001	1.62	2.12	1.250-12	3 EA. #16
CR1447-2	M24217/5-002	1.74	2.37	1.500-12	5 EA. #16
CR1447-3	M24217/5-003	1.87	2.62	1.750-12	9 EA. #16
CR1447-4	M24217/5-004	1.99	3.00	2.125-12	14 EA. #16
CR1447-5	M24217/5-005	2.12	3.37	2.500-12	24 EA. #16
CR1447-6	M24217/5-006	2.12	3.87	3.000-12	37 EA. #16
CR1447-7	M24217/5-007	2.41	4.62	3.750-12	48 EA. #16
CR1447-8	M24217/5-008	2.88	2.62	1.750-12	3 EA. #12
CR1447-9	M24217/5-009	2.88	3.00	2.125-12	5 EA. #12
CR1447-10	M24217/5-010	2.88	3.37	2.500-12	9 EA. #12
CR1447-11	M24217/5-011	2.88	3.00	2.125-12	3 EA. #8
CR1447-12	M24217/5-012	2.88	3.37	2.500-12	3 EA. #4
CR1447-13	M24217/5-013	2.88	3.37	2.500-12	3 EA. #12 3 EA. #8
CR1447-14	M24217/5-014	2.88	3.87	3.000-12	2 EA. #0 4 EA. #12

CONFIGURATIONS AVAILABLE

Please refer to page 2.16 for above configurations available on the Receptacle Assembly – MIL-C-24217/5 End-Flanged Bolted Type.

RECEPTACLE ASSEMBLY – MIL-C-24217/6 LOCKNUT FLANGE TYPE

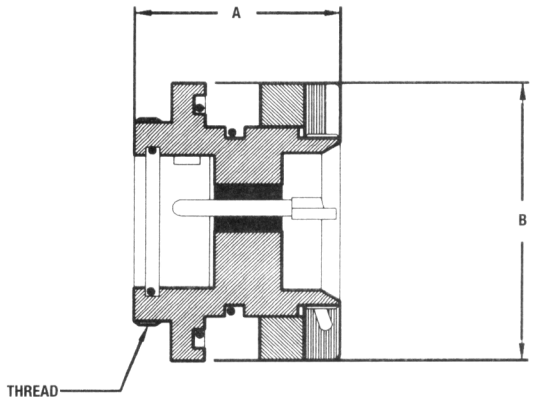

SEA CON®/PHOENIX PART NUMBER	MILITARY PART NUMBER	"A" DIM	"B" DIM	THREAD 2A	NO. OF PINS
CR1448-1	M24217/6-001	1.62	1.87	1.250-12	3 EA. #16
CR1448-2	M24217/6-002	1.74	2.12	1.500-12	5 EA. #16
CR1448-3	M24217/6-003	1.87	2.25	1.750-12	9 EA. #16
CR1448-4	M24217/6-004	1.99	2.62	2.125-12	14 EA. #16
CR1448-5	M24217/6-005	2.12	3.12	2.500-12	24 EA. #16
CR1448-6	M24217/6-006	2.12	3.62	3.000-12	37 EA. #16
CR1448-7	M24217/6-007	2.41	4.37	3.750-12	48 EA. #16
CR1448-8	M24217/6-008	2.88	2.25	1.750-12	3 EA. #12
CR1448-9	M24217/6-009	2.88	2.62	2.125-12	5 EA. #12
CR1448-10	M24217/6-010	2.88	3.12	2.500-12	9 EA. #12
CR1448-11	M24217/6-011	2.88	2.62	2.125-12	3 EA. #8
CR1448-12	M24217/6-012	2.88	3.12	2.500-12	3 EA. #4
CR1448-13	M24217/6-013	2.88	3.12	2.500-12	3 EA. #12 3 EA. #8
CR1448-14	M24217/6-014	2.88	3.62	3.000-12	2 EA. #0 4 EA. #12
CR1448-15	M24217/6-015	1.59	1.87	1.375-12	8 EA. #16

CONFIGURATIONS AVAILABLE

Please refer to page 2.16 for above configurations available on the Receptacle Assembly – MIL-C-24217/6 Locknut Flange Type.

PLUG ASSEMBLY – MIL-C-24217/7 STRAIGHT

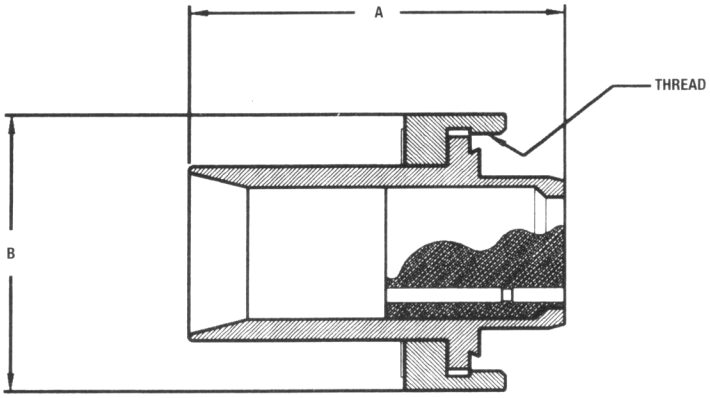

SEA CON®/PHOENIX PART NUMBER	MILITARY PART NUMBER	"A" DIM	"B" DIM	THREAD 2B	NO. OF SOCKETS	CRIMP AWG
CP1462-1	M24217/7-001	2.31	1.37	1.250-12	3 EA. #16	16
CP1462-2	M24217/7-002	2.31	1.37	1.250-12	3 EA. #16	20
CP1462-3	M24217/7-003	2.51	1.75	1.500-12	5 EA. #16	16
CP1462-4	M24217/7-004	2.51	1.75	1.500-12	5 EA. #16	20
CP1462-5	M24217/7-005	2.62	2.00	1.750-12	9 EA. #16	16
CP1462-6	M24217/7-006	2.62	2.00	1.750-12	9 EA. #16	20
CP1462-7	M24217/7-007	3.01	2.37	2.125-12	14 EA. #16	16
CP1462-8	M24217/7-008	3.01	2.37	2.125-12	14 EA. #16	20
CP1462-9	M24217/7-009	3.13	2.75	2.500-12	24 EA. #16	16
CP1462-10	M24217/7-010	3.13	2.75	2.500-12	24 EA. #16	20
CP1462-11	M24217/7-011	3.38	3.50	3.000-12	37 EA. #16	16
CP1462-12	M24217/7-012	3.38	3.50	3.000-12	37 EA. #16	20
CP1462-13	M24217/7-013	3.63	4.12	3.750-12	48 EA. #16	16
CP1462-14	M24217/7-014	3.63	4.12	3.750-12	48 EA. #16	20
CP1462-15	M24217/7-015	3.08	2.00	1.750-12	3 EA. #12	N/A
CP1462-16	M24217/7-016	3.59	3.75	2.125-12	5 EA. #12	N/A
CP1462-17	M24217/7-017	3.59	2.75	2.500-12	9 EA. #12	N/A
CP1462-18	M24217/7-018	3.46	3.75	2.125-12	3 EA. #8	N/A
CP1462-19	M24217/7-019	3.59	2.75	2.500-12	3 EA. #4	N/A
CP1462-20	M24217/7-020	3.59	2.75	2.500-12	3 EA. #12 3 EA. #8	N/A
CP1462-21	M24217/7-021	3.84	3.37	3.000-12	2 EA. #0 4 EA. #12	N/A
CP1462-22	M24217/7-022	2.31	1.37	1.250-12	5 EA. #16 (SPECIAL)	16
CP1462-23	M24217/7-023	2.31	1.37	1.250-12	5 EA. #16 (SPECIAL)	20

CONFIGURATIONS AVAILABLE

Please refer to page 2.17 for above configurations available on the Plug Assembly – MIL-C-24217/7 Straight.

PLUG ASSEMBLY – MIL-C-24217/8 RIGHT ANGLE

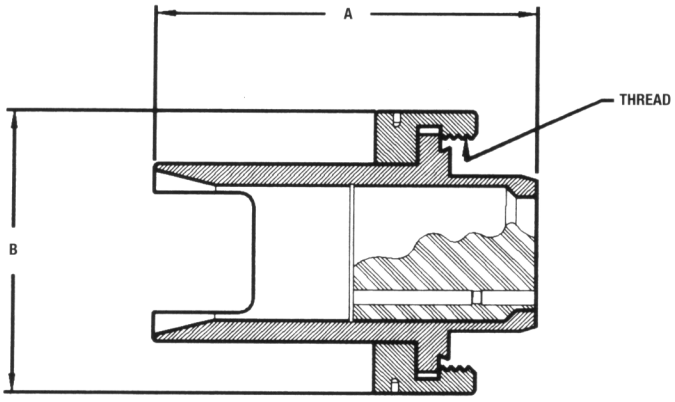

SEA CON®/PHOENIX PART NUMBER	MILITARY PART NUMBER	"A" DIM	"B" DIM	THREAD 2B	NO. OF SOCKETS	CRIMP AWG
CP1466-1	M24217/8-001	2.31	1.37	1.250-12	3 EA. #16	16
CP1466-2	M24217/8-002	2.31	1.37	1.250-12	3 EA. #16	20
CP1466-3	M24217/8-003	2.51	1.75	1.500-12	5 EA. #16	16
CP1466-4	M24217/8-004	2.51	1.75	1.500-12	5 EA. #16	20
CP1466-5	M24217/8-005	2.62	2.00	1.750-12	9 EA. #16	16
CP1466-6	M24217/8-006	2.62	2.00	1.750-12	9 EA. #16	20
CP1466-7	M24217/8-007	3.01	2.37	2.125-12	14 EA. #16	16
CP1466-8	M24217/8-008	3.01	2.37	2.125-12	14 EA. #16	20
CP1466-9	M24217/8-009	3.13	2.75	2.500-12	24 EA. #16	16
CP1466-10	M24217/8-010	3.13	2.75	2.500-12	24 EA. #16	20
CP1466-11	M24217/8-011	3.38	3.50	3.000-12	37 EA. #16	16
CP1466-12	M24217/8-012	3.38	3.50	3.000-12	37 EA. #16	20
CP1466-13	M24217/8-013	3.63	4.12	3.750-12	48 EA. #16	16
CP1466-14	M24217/8-014	3.63	4.12	3.750-12	48 EA. #16	20
CP1466-15	M24217/8-015	3.08	2.00	1.750-12	3 EA. #12	N/A
CP1466-16	M24217/8-016	3.60	3.75	2.215-12	5 EA. #12	N/A
CP1466-17	M24217/8-017	3.60	2.75	2.500-12	9 EA. #12	N/A
CP1466-18	M24217/8-018	3.46	3.75	2.125-12	3 EA. #8	N/A
CP1466-19	M24217/8-019	3.60	2.75	2.500-12	3 EA. #4	N/A
CP1466-20	M24217/8-020	3.60	2.75	2.500-12	3 EA. #12, 3 EA. #8	N/A
CP1466-21	M24217/8-021	2.25	1.50	1.375-12	8 EA. #16	16
CP1466-22	M24217/8-022	3.01	2.37	2.125-12	14 EA. #16 (SPECIAL)	16
CP1466-25	M24217/8-025	5.01	3.37	3.000-12	2 EA. #0, 4 EA. #12	N/A
CP1466-26	M24217/8-026	5.12	3.63	3.250-12	3 EA. #0 (STYLE A)	N/A
CP1466-27	M24217/8-027	5.12	3.63	3.250-12	3 EA. #0 (STYLE B)	N/A
CP1466-28	M24217/8-028	5.12	3.63	3.250-12	3 EA. #0 (STYLE C)	N/A
CP1466-29	M24217/8-029	5.12	3.63	3.250-12	3 EA. #0 (STYLE D)	N/A

CONFIGURATIONS AVAILABLE

Please refer to page 2.17 for above configurations available on the Plug Assembly – MIL-C-24217/8 Right Angle.

SEA CON® AB

PRESSURE-PROOF PLUG CAP ASSEMBLY – MIL-C-24217/9

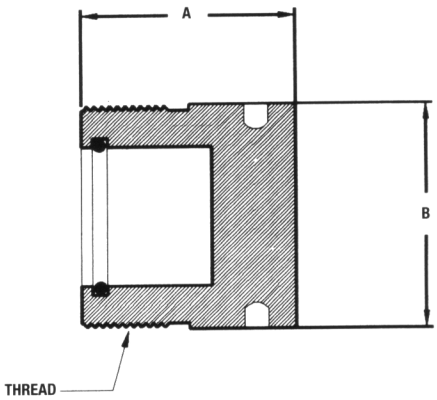

SEA CON®/PHOENIX PART NUMBER	MILITARY PART NUMBER	"A" DIM	"B" DIM	THREAD 2A	FOR USE WITH PLUG TYPE
SP1463-1	M24217/9-001	2.00	1.25	1.250-12	3 EA. #16 & 5 EA. #16 (SPECIAL)
SP1463-2	M24217/9-002	2.00	1.50	1.500-12	5 EA. #16
SP1463-3	M24217/9-003	2.00	1.75	1.750-12	9 EA. #16 & 3 EA. #12
SP1463-4	M24217/9-004	2.00	2.12	2.125-12	14 EA. #16, 5 EA. #12 & 3 EA. #8
SP1463-5	M24217/9-005	2.00	2.50	2.500-12	24 EA. #16, 3 EA. #4, 9 EA. #12 & 3 EA. #12 With 3 EA. #8
SP1463-6	M24217/9-006	2.00	3.00	3.000-12	37 EA. #16 & 2 EA. #0 With 4 EA. #12
SP1463-7	M24217/9-007	2.00	3.75	3.750-12	48 EA. #16
SP1463-8	M24217/9-008	2.00	1.37	1.375-12	8 EA. #16
SP1463-9	M24217/9-009	2.00	3.25	3.250-12	3 EA. #0

PRESSURE-PROOF RECEPTACLE CAP ASSEMBLY – MIL-C-24217/10

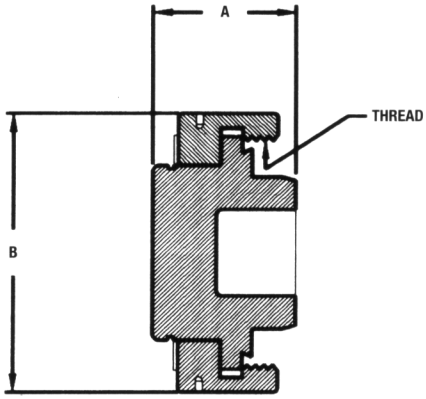

SEA CON®/PHOENIX PART NUMBER	MILITARY PART NUMBER	"A" DIM	"B" DIM	THREAD 2B	FOR USE WITH RECEPTACLE TYPE
SC1464-1	M24217/10-001	1.13	1.27	1.250-12	3 EA. #16
SC1464-2	M24217/10-002	1.13	1.52	1.500-12	5 EA. #16
SC1464-3	M24217/10-003	1.22	1.77	1.750-12	9 EA. #16
SC1464-4	M24217/10-004	1.22	2.14	2.125-12	14 EA. #16
SC1464-5	M24217/10-005	1.22	2.52	2.500-12	24 EA. #16
SC1464-6	M24217/10-006	1.37	3.02	3.000-12	37 EA. #16
SC1464-7	M24217/10-007	1.54	3.77	3.750-12	48 EA. #16
SC1464-8	M24217/10-008	1.22	1.77	1.750-12	3 EA. #12
SC1464-9	M24217/10-009	1.22	2.14	2.125-12	5 EA. #12 & 3 EA. #8
SC1464-10	M24217/10-010	1.22	2.52	2.500-12	9 EA. #12, 3 EA. #4 & 3 EA. #12 With 3 EA. #8
SC1464-11	M24217/10-011	1.37	3.02	3.000-12	2 EA. #0 With 4 EA. #12
SC1464-12	M24217/10-012	1.13	1.39	1.375-12	8 EA. #16
SC1464-13	M24217/10-013	1.37	3.26	3.250-12	3 EA. #0

RECEPTACLE ASSEMBLY – MIL-C-24217/11 UNION TYPE

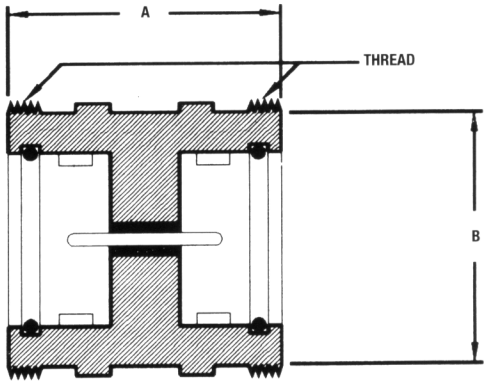

SEA CON®/PHOENIX PART NUMBER	MILITARY PART NUMBER	"A" DIM	"B" DIM	THREAD 2A	NO. OF PINS
CR1465-1	M24217/11-001	1.84	1.25	1.250-12	3 EA. #16
CR1465-2	M24217/11-002	1.96	1.50	1.500-12	5 EA. #16
CR1465-3	M24217/11-003	2.09	1.75	1.750-12	9 EA. #16
CR1465-4	M24217/11-004	2.11	2.12	2.125-12	14 EA. #16
CR1465-5	M24217/11-005	2.34	2.50	2.500-12	24 EA. #16
CR1465-6	M24217/11-006	2.34	3.00	3.000-12	37 EA. #16
CR1465-7	M24217/11-007	2.34	3.75	3.750-12	48 EA. #16
CR1465-8	M24217/11-008	3.25	1.75	1.750-12	3 EA. #12
CR1465-9	M24217/11-009	3.25	2.12	2.125-12	5 EA. #12
CR1465-10	M24217/11-010	3.25	2.50	2.500-12	9 EA. #12
CR1465-11	M24217/11-011	3.25	2.12	2.125-12	3 EA. #8
CR1465-12	M24217/11-012	3.25	2.50	2.500-12	3 EA. #4
CR1465-13	M24217/11-013	3.25	2.50	2.500-12	3 EA. #12 3 EA. #8
CR1465-14	M24217/11-014	3.25	3.00	3.000-12	2 EA. #0 4 EA. #12

CONFIGURATIONS AVAILABLE

Please refer to page 2.16 for above configurations available on the Receptacle Assembly – MIL-C-24217/11 Union Type.

RECEPTACLE ASSEMBLY – MIL-C-24217/12 MID-FLANGED, BOLTED, UNION TYPE

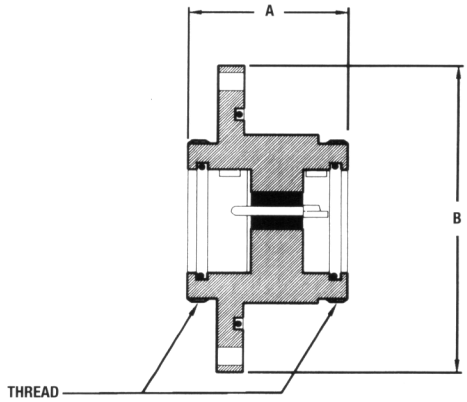

SEA CON®/PHOENIX PART NUMBER	MILITARY PART NUMBER	"A" DIM	"B" DIM	THREAD 2A	NO. OF PINS
CR1467-1	M24217/12-001	2.12	3.75	1.250-12	3 EA. #16
CR1467-2	M24217/12-002	2.12	3.75	1.500-12	5 EA. #16
CR1467-3	M24217/12-003	2.12	3.75	1.750-12	9 EA. #16
CR1467-4	M24217/12-004	2.12	3.75	2.125-12	14 EA. #16

CONFIGURATIONS AVAILABLE

Please refer to page 2.16 for above configurations available on the Receptacle Assembly – MIL-C-24217/12 Mid-Flanged, Bolted, Union Type.

RECEPTACLE ASSEMBLY – MIL-C-24217/13 MID-FLANGE, LOCKNUT, UNION TYPE

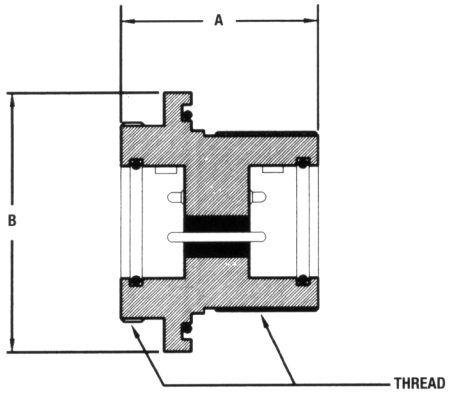

SEA CON®/PHOENIX PART NUMBER	MILITARY PART NUMBER	"A" DIM	"B" DIM	THREAD 2A	NO. OF PINS
CR1468-1	M24217/13-001	1.96	2.37	1.500-12	5 EA. #16
CR1468-2	M24217/13-002	3.25	3.01	2.125-12	14 EA. #16
CR1468-3	M24217/13-003	3.12	2.37	1.750-12	3 EA. #12
CR1468-4	M24217/13-004	3.25	4.12	3.250-12	3 EA. #0 120 KEY
CR1468-5	M24217/13-005	3.25	4.12	3.250-12	3 EA. #0 150 KEY

CONFIGURATIONS AVAILABLE

Please refer to page 2.16 for above configurations available on the Receptacle Assembly – MIL-C-24217/13 Mid-Flange, Locknut, Union Type.

PLUG ASSEMBLY – MIL-C-24217/14 STRAIGHT, UNION TYPE

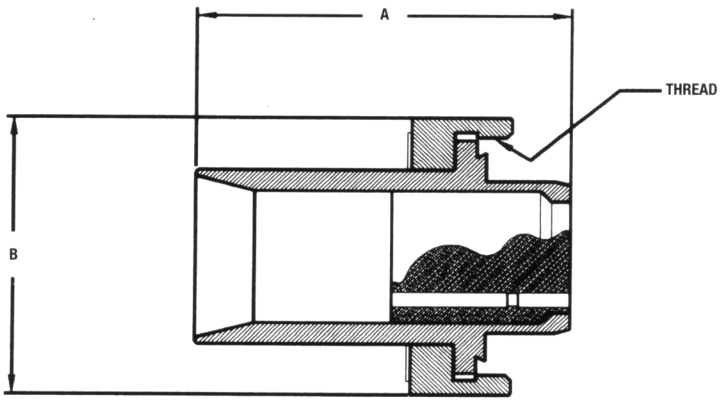

SEA CON®/PHOENIX PART NUMBER	MILITARY PART NUMBER	"A" DIM	"B" DIM	THREAD 2B	NO. OF SOCKETS	CRIMP AWG
CP1469-1	M24217/14-001	2.31	1.37	1.250-12	3 EA. #16	16
CP1469-2	M24217/14-002	2.31	1.37	1.250-12	3 EA. #16	20
CP1469-3	M24217/14-003	2.51	1.75	1.500-12	5 EA. #16	16
CP1469-4	M24217/14-004	2.51	1.75	1.500-12	5 EA. #16	20
CP1469-5	M24217/14-005	2.62	2.00	1.750-12	9 EA. #16	16
CP1469-6	M24217/14-006	2.62	2.00	1.750-12	9 EA. #16	20
CP1469-7	M24217/14-007	3.01	2.37	2.125-12	14 EA. #16	16
CP1469-8	M24217/14-008	3.01	2.37	2.125-12	14 EA. #16	20
CP1469-9	M24217/14-009	3.13	2.75	2.500-12	24 EA. #16	16
CP1469-10	M24217/14-010	3.13	2.75	2.500-12	24 EA. #16	20
CP1469-11	M24217/14-011	3.38	3.50	3.000-12	37 EA. #16	16
CP1469-12	M24217/14-012	3.38	3.50	3.000-12	37 EA. #16	20
CP1469-13	M24217/14-013	3.63	4.12	3.750-12	48 EA. #16	16
CP1469-14	M24217/14-014	3.63	4.12	3.750-12	48 EA. #16	20
CP1469-15	M24217/14-015	3.08	2.00	1.750-12	3 EA. #12	N/A
CP1469-16	M24217/14-016	3.59	3.75	2.125-12	5 EA. #12	N/A
CP1469-17	M24217/14-017	3.59	2.75	2.500-12	9 EA. #12	N/A
CP1469-18	M24217/14-018	3.46	3.75	2.125-12	3 EA. #8	N/A
CP1469-19	M24217/14-019	3.59	2.75	2.500-12	3 EA. #4	N/A
CP1469-20	M24217/14-020	3.59	2.75	2.500-12	3 EA. #12 3 EA. #8	N/A
CP1469-21	M24217/14-021	3.84	3.37	3.000-12	2 EA. #0 4 EA. #12	N/A

CONFIGURATIONS AVAILABLE

Please refer to page 2.17 for above configurations available on the Plug Assembly – MIL-C-24217/14 Straight, Union Type.

PLUG ASSEMBLY – MIL-C-24217/15 RIGHT ANGLE, UNION TYPE

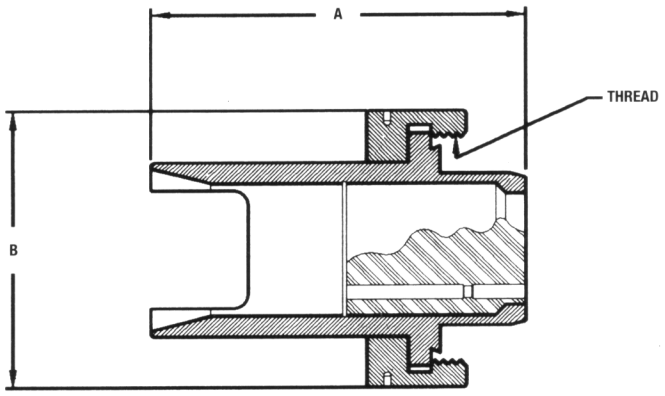

SEA CON®/PHOENIX PART NUMBER	MILITARY PART NUMBER	"A" DIM	"B" DIM	THREAD 2B	NO. OF SOCKETS	CRIMP AWG
CP1470-1	M24217/15-001	2.31	1.37	1.250-12	3 EA. #16	16
CP1470-2	M24217/15-002	2.31	1.37	1.250-12	3 EA. #16	20
CP1470-3	M24217/15-003	2.51	1.75	1.500-12	5 EA. #16	16
CP1470-4	M24217/15-004	2.51	1.75	1.500-12	5 EA. #16	20
CP1470-5	M24217/15-005	2.62	2.00	1.750-12	9 EA. #16	16
CP1470-6	M24217/15-006	2.62	2.00	1.750-12	9 EA. #16	20
CP1470-7	M24217/15-007	3.01	2.37	2.125-12	14 EA. #16	16
CP1470-8	M24217/15-008	3.01	2.37	2.125-12	14 EA. #16	20
CP1470-9	M24217/15-009	3.13	2.75	2.500-12	24 EA. #16	16
CP1470-10	M24217/15-010	3.13	2.75	2.500-12	24 EA. #16	20
CP1470-11	M24217/15-011	3.38	3.50	3.000-12	37 EA. #16	16
CP1470-12	M24217/15-012	3.38	3.50	3.000-12	37 EA. #16	20
CP1470-13	M24217/15-013	3.63	4.12	3.750-12	48 EA. #16	16
CP1470-14	M24217/15-014	3.63	4.12	3.750-12	48 EA. #16	20
CP1470-15	M24217/15-015	3.08	2.00	1.750-12	3 EA. #12	N/A
CP1470-16	M24217/15-016	3.60	3.75	2.125-12	5 EA. #12	N/A
CP1470-17	M24217/15-017	3.60	2.75	2.500-12	9 EA. #12	N/A
CP1470-18	M24217/15-018	3.46	3.75	2.125-12	3 EA. #8	N/A
CP1470-19	M24217/15-019	3.60	2.75	2.500-12	3 EA. #4	N/A
CP1470-20	M24217/15-020	3.60	2.75	2.500-12	3 EA. #12, 3 EA. #8	N/A
CP1470-21	M24217/15-021	3.01	2.37	2.125-12	14 EA. #16 (SPECIAL)	16
CP1470-22	M24217/15-022	3.08	1.87	1.500-12	3 EA. #12 (SPECIAL)	N/A
CP1470-25	M24217/15-025	5.01	3.37	3.000-12	2 EA. #0, 4 EA. #12	N/A
CP1470-26	M24217/15-026	5.12	3.63	3.250-12	3 EA. #0 (STYLE E)	N/A
CP1470-27	M24217/15-027	5.12	3.63	3.250-12	3 EA. #0 (STYLE F)	N/A
CP1470-28	M24217/15-028	5.12	3.63	3.250-12	3 EA. #0 (STYLE G)	N/A
CP1470-29	M24217/15-029	5.12	3.63	3.250-12	3 EA. #0 (STYLE H)	N/A

CONFIGURATIONS AVAILABLE

Please refer to page 2.17 for above configurations available on the Plug Assembly – MIL-C-24217/15 Right Angle, Union Type.

MIL-C-24217 RECEPTACLE CONFIGURATIONS

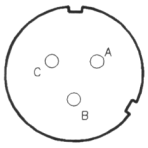

3 #16

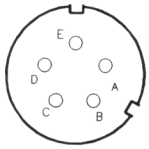

5 #16
(SPECIAL)

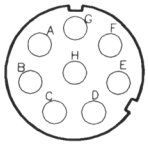

8 #16

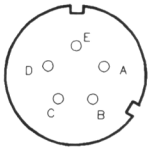

5 #16

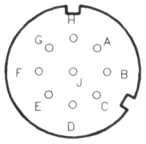

9 #16

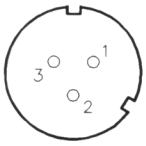

3 #12

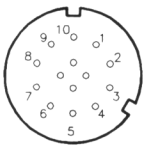

14 #16

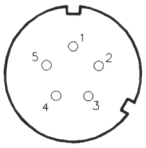

5 #12

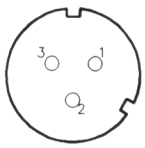

3 #8

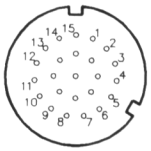

24 #16

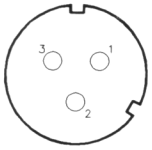

3 #4

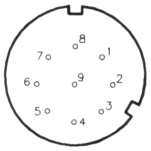

9 #12

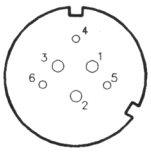

3 #12
3 #8

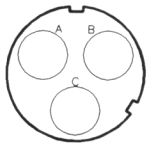

3 #0

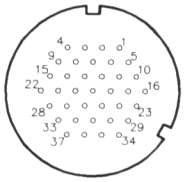

37 #16

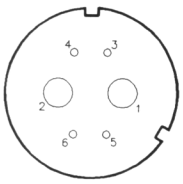

2 #0
4 #12

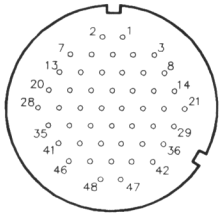

48 #16

SEA CON AB

MIL-C-24217 PLUG CONFIGURATIONS

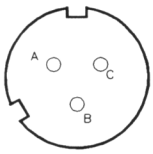

3 #16

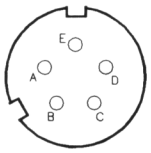

5 #16
(SPECIAL)

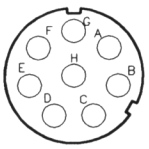

8 #16

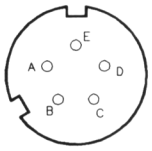

5 #16

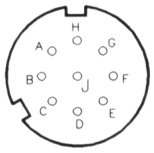

9 #16

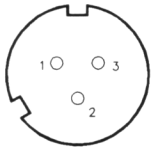

3 #12

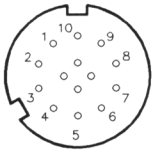

14 #16

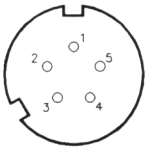

5 #12

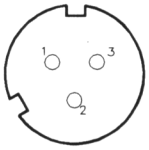

3 #8

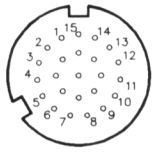

24 #16

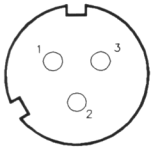

3 #4

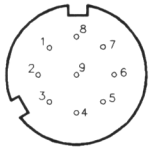

9 #12

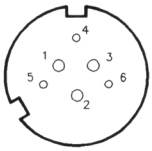

3 #12
3 #8

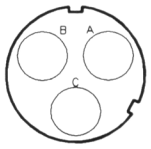

3 #0

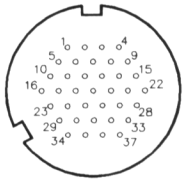

37 #16

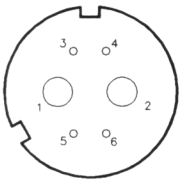

2 #0
4 #12

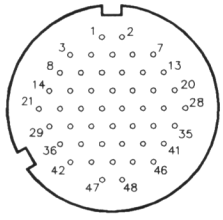

48 #16

MIL SPEC ALTERNATES
GLASS REINFORCED EPOXY UNDERWATER CONNECTORS

HISTORY

SEA CON® developed the GRE (glass reinforced epoxy) MIL-Spec alternate connectors as a replacement for the metal shell connectors which were being used unsuccessfully on the AN/BQQ-5 sonar (TR-317 transducer connectors). The GRE type TR-317 connectors developed for this system were fully tested by the U.S. Navy to all underwater MIL-Spec requirements, including the underwater explosive shock test.

The old metal shell TR-317 connectors were experiencing catastrophic water leakage problems resulting in failure of the connectors. The success of the new GRE TR-317 in-the-field confirmed the suspicion that the metal shell TR-317 connectors were leaking because of debonding of the elastomeric molding material from the metal shell. The debonding was a result of galvanic action between the metal hull of the submarine and the bonded metallic surface of the connectors, caused by cathodic delamination.

DESIGN AND DEVELOPMENT

The success of the GRE TR-317 connector led SEA CON® to design GRE cable plugs as replacements for metal shell MIL-Spec cable plugs meeting MIL-C-22539, MIL-C-24231 (Portsmouth) and MIL-C-24217 (Deep Submergence). The GRE MIL-C-24231, Portsmouth (PXL-CCP) cable plugs have been subjected to over one year accelerated life testing. The results showed that GRE material itself is a compatible substrate for a long term bonding to neoprene and polyurethane rubbers, and that the non-conductive properties of the GRE connector bodies prevent the occurrence of cathodic delamination.

The SEA CON® GRE MIL-Spec alternate cable plug connectors are interchangeable with their MIL-C counterparts and mate with the applicable MIL-Spec bulkhead receptacle. Metal rings have been added integrally to the connectors to lend strength and durability with out jeopardizing the integrity of the elastomeric bond of the connectors. While the metal rings are not required to meet the MIL-Spec, they do sailor-proof the connectors, especially during mating and unmating.

The MIL-C-22539 (RX-CCP Series) has been used on under ice sonars. The MIL-C-24217, Deep Submergence (DX-CCP Series) are used on the AN/BQS-15 sonars as well as other sonar systems. The MIL-C-24231, Portsmouth (PX-CCP Series) connector, designed for use on the DT-276 hydrophone used on the AN/BQR-7 sonar array, has successfully completed over one year in-the-field testing on three U.S. Navy SSBN submarines.

All individual material and combination of materials used to fabricate the MIL-Spec alternate connectors have passed the following tests:

Environment Tests

Salt Spray (Corrosion) -
IAW MIL-STD-202, Method 101
Humidity (Steady State) -
IAW MIL-STD-202, Method 103
Thermal Shock -
IAW MIL-STD-202, Method 107
Hydrostatic Pressure -
IAW MIL-STD-1344, Method 1006

Physical Tests

Underwater Explosion Shock Test -
IAW MIL-S-901, High Impact/Heavy Duty
Vibration (Mechanical) -
IAW MIL-STD-167, Type 1

Electrical Tests

Dielectric Withstanding Voltage -
IAW MIL-STD-202, Method 301
Insulation Resistance -
IAW MIL-STD-202, Method 302

The individual materials and combination of materials comprising the GRE MIL-Spec cable plugs have passed the above tests, the GRE Portsmouth cable plug has passed over one year in-the-field testing on Navy submarines, and the GRE Portsmouth has passed over one year laboratory accelerated life testing. Based on these results, NAVSEA 63X is currently in the process of generating a SHIPALT to allow the usage of the GRE MIL-Spec connectors in place of the metal shell style.

FUTURE DEVELOPMENTS

In addition to constantly adding to the contact configurations available in all the GRE MIL-Spec Alternate line of connectors, SEA CON® continues with the development of new options. Among new developments are two of special interest within the MIL-C-24231, Portsmouth (PX-CCP) Series. The first is a design to include “floating contacts” in the cable plug. The second, which could be utilized on standard units or could apply as an option, is a modification which would allow these connectors to be mated and umated underwater. With this option, connectors, and therefore electronics, could be replaced without dry-docking the submarine.

DX-CCP SERIES DWG. NO. 6719-100

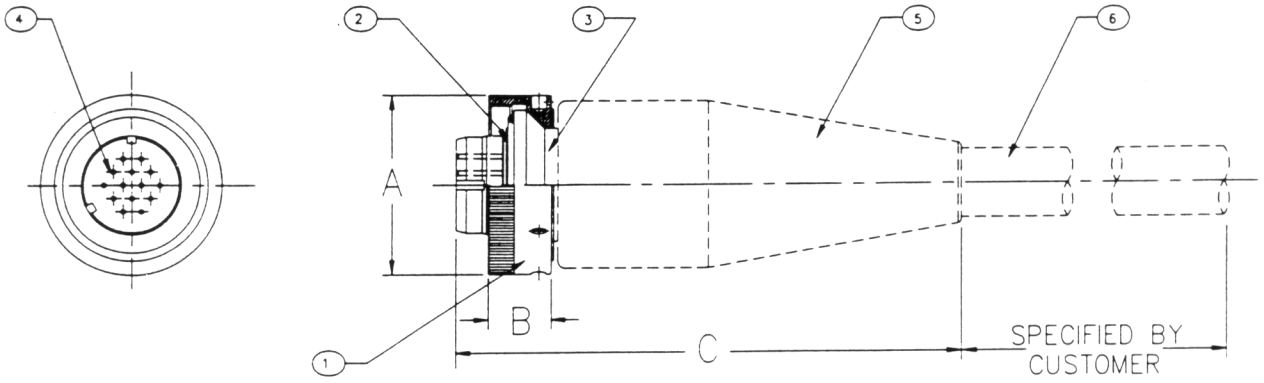

DXG-3L-CCP
SEA CON® 6719-107
M 24217/ 7-001
M 24217/ 8-001
M 24217/ 14-001
M 24217/ 15-001

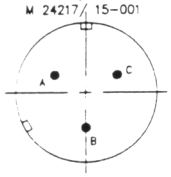

DXK-5L-CCP
SEA CON® 6719-114
M 24217/ 7-003
M 24217/ 8-003
M 24217/ 14-003
M 24217/ 15-003

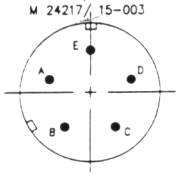

DXL-9L-CCP
SEA CON® 6719-109
M 24217/ 7-005
M 24217/ 8-005
M 24217/ 14-005
M 24217/ 15-005

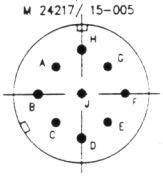

DXL-16-CCP
SEA CON® 6719-119

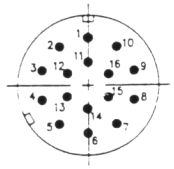

DXM-14L-CCP
SEA CON® 6719-110
M 24217/ 7-007
M 24217/ 8-007
M 24217/ 14-007
M 24217/ 15-007

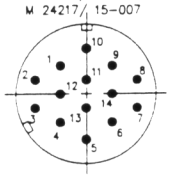

DXO-24L-CCP
SEA CON® 6719-117
M 24217/ 7-009
M 24217/ 8-009
M 24217/ 14-009
M 24217/ 15-009

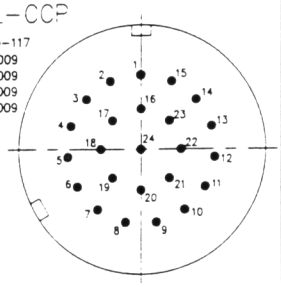

DIMENSIONAL REFERENCE					
	DXG-CCP	DXK-CCP	DXL-CCP	DXM-CCP	DXO-CCP
A	1.37	1.75	1.99	2.37	2.75
B	.75	.75	.84	.84	.84
C	4.20	6.31	6.31	6.81	7.02

BILL OF MATERIALS	
6	CABLE AS SPECIFIED BY CUSTOMER
5	OVERMOLD AS SPECIFIED BY CUSTOMER
4	#16 AWG CONTACT SKT GOLD PLATED
3	DX-CCP BODY GLASS REINFORCED EPOXY
2	DX-PLUG RING 316 STAINLESS STEEL
1	ENGAGING NUT COPPER ALLOY 630
ITEM	NOMENCLATURE OR DESCRIPTION
	PARTS LIST SEACON®

CONTRACT NO.

APPROVALS | DATE
DRAWN D.A. PRICE 88-10-25
CHECKED LAI-PHAM 88-10-26
ISSUED

SEA CON BRANTNER & ASSOCIATES, INC.
MAIN PLANT 1240 VERNON WAY EL CAJON, CALIF. 92020

DX-DEEP SUBMERGENCE

SIZE C | FSCM NO. 15789 | DWG NO. 6719-100 | REV A

A stainless steel (316SS) ring is used to strengthen the high stress areas of the connector. The ring is designed to disburse the instantaneous loads from the Underwater Explosive Shock Test, thus reducing the internal stress to safe levels.

Hydrostatic pressure rating of the DX-CCP series meets or exceeds 13,500 psi.

PX-CCP SERIES DWG. NO. 6546-100

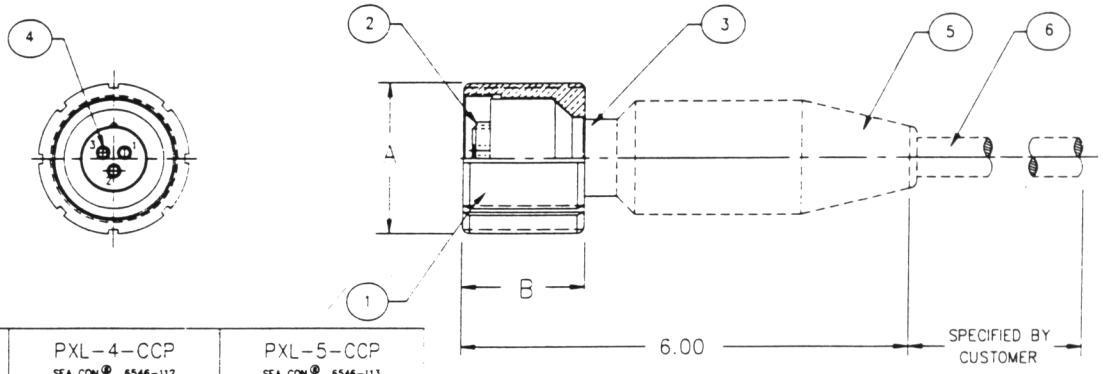

PXL-3-CCP	PXL-4-CCP	PXL-5-CCP
SEA CON® 6546-111 M 24231/1-001 M 24231/2-001	SEA CON® 6546-112 M 24231/1-002 M 24231/2-002	SEA CON® 6546-113 M 24231/1-003 M 24231/2-003
PXM-7-CCP	PXM-9-CCP	PXO-14-CCP
SEA CON® 6799-102 M 24231/3-001 M 24231/3-003	SEA CON® 6799-103 M 24231/3-002 M 24231/3-004	SEA CON® 6758-103 M 24231/4-001 M 24231/4-006
PXO-24-CCP	PXO-30-CCP	PXO-40-CCP
SEA CON® 6758-102 M 24231/4-002 M 24231/4-007	SEA CON® 6758-104 M 24231/4-003 M 24231/4-008	SEA CON® 6758-105 M 24231/4-004 M 24231/4-005 M 24231/4-009

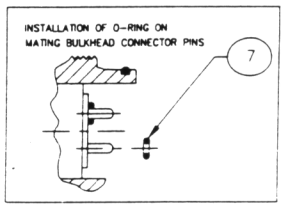

DIMENSIONAL REFERENCE			
	PXL-CCP	PXM-CCP	PXO-CCP
A	2.00	2.50	3.37
B	1.61	1.61	2.05

BILL OF MATERIALS		
7	O-RING BUNA-N-003	
6	CABLE AS SPECIFIED BY CUSTOMER	
5	OVERMOLD AS SPECIFIED BY CUSTOMER	
4	# 16 AWG CONTACT SKT GOLD PLATED	
3	PX-CCP BODY GLASS REINFORCED EPOXY	
2	PX-PLUG SLEEVE 316 SST	
1	ENGAGING NUT CA 630	
ITEM	NOMENCLATURE OR DESCRIPTION	
	PARTS LIST	SEACON®

CONTRACT NO.		BRANTNER & ASSOCIATES, INC. MAIN PLANT 1240 VERNON WAY EL CAJON, CALIF. 92020
APPROVALS	DATE	PX-CCP SUPER PLUG
DRAWN T. Truong	88-9-28	
CHECKED		
ISSUED		SIZE C / PSCM NO. 15789 / DWG NO. 6546-100

A stainless steel (316SS) key ring is used to increase the strength of the key to prevent shearing when mating and to strenghten the high stress areas of the connector.

Hydrostatic pressure rating of the PX-CCP series meets or exceeds 2,000 psi.

RXL-8-CCP DWG. NO. 6473-100

REVISIONS					
ZONE	REV	REF E.C.O. NO	DESCRIPTION	DATE	APPROVED
	A	6711	REVISE ITEM #7		

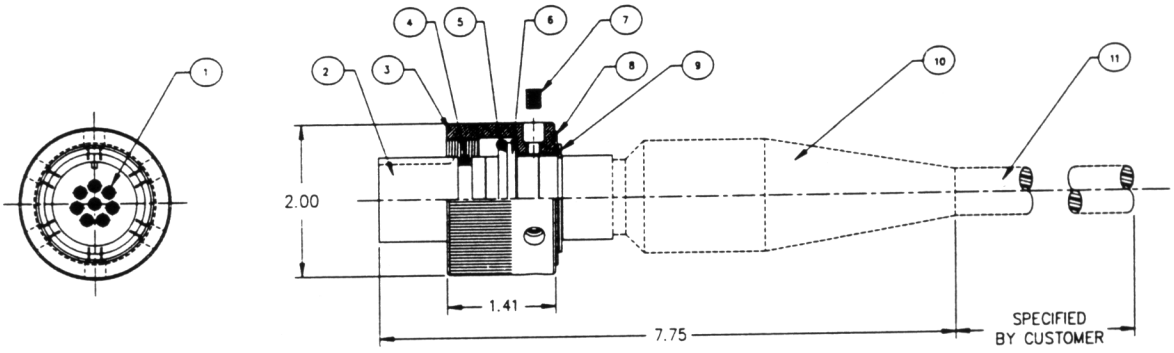

BILL OF MATERIAL	
11	CABLE AS SPECIFIED BY CUSTOMER
10	OVERMOLD AS SPECIFIED BY CUSTOMER
9	SPIROLOX RETAINER 302 SST
8	ENGAGING NUT WASHER BLACK DELRIN
7	SCREW HIGH GRADE SST
6	RXL-CCP RING 316 SST
5	O-RING BUNA-N 2-219
4	O-RING BUNA-N 2-212
3	ENGAGING NUT COPPER ALLOY 630
2	RXL-CCP BODY GLASS REINFORCED EPOXY
1	#16 AWG CONTACT SKT GOLD PLATED

ITEM NOMENCLATURE OR DESCRIPTION — PARTS LIST — SEACON®

RXL-8-CCP

SEA-CON® 6473-100

M 225390 BOS#818-1197170

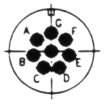

CONTRACT NO.		BRANTNER & ASSOCIATES, INC. MAIN PLANT 1240 VERNON WAY EL CAJON, CALIF. 92020			
APPROVALS	DATE	RXL-8-CCP			
DRAWN T. Phuong	88-12-20				
CHECKED LAI PHAM	88-1-10	SIZE B	PSCM NO. 15789	DWG NO. 6473-100	REV A
ISSUED		SCALE 1/1		SHEET OF	

A stainless steel (316SS) ring is used to strengthen the high stress areas of the connector. The ring is designed to disburse the instantaneous loads from the Underwater Explosive Shock Test, thus reducing the internal stress to safe levels.

Hydrostatic pressure rating of the RX-CCP series meets or exceeds 2,000 psi.

SEM SERIES LIGHT CONNECTORS

BODY MATERIAL:	GLASS REINFORCED EPOXY (GRE)		
CONTACTS:	COPPER ALLOY, GOLD PLATED PER MIL-G-45204		
O-RING:	#2 - 213, BUNA, 70 DUROMETER		
THREAD SIZE:	3/4 - 16 UNF		
THREAD LENGTH:	SEM2P - S	-	.50
	SEM3P - C	-	.50
	SEM3PK - C	-	.50
	SEM2P - S4	-	.37
	SEM3P - S4	-	.37
	SEM2P-S-XT	-	.87
MOUNTING TORQUE:	**85 INCH POUNDS**		
PRESSURE RATING:	**20,000 PSI MATED**		

REVISIONS					
ZONE	REV	REF E.C.O. NO.	DESCRIPTION	DATE	APPROVED
	A	9637	REVISE TITLE & PARTS LIST		

NOTES:

1. MATERIAL: GLASS REINFORCED EPOXY B/A XS-2748.
2. MATERIAL: COPPER ALLOY & GOLD PLATED PER MIL-G-45204
3. MATERIAL: COPPER ALLOY 360 PER QQ-B-637.
4. MATERIAL: COPPER ALLOY 752 OR 792
5. MATERIAL: 316 STAINLESS STEEL PER QQ-S-763
6. THIS DRAWING WAS PREVIOUSLY 6788-421, NUMBER WAS REVISED TO CONFORM TO OUR NUMBERING SCHEME.

SEM-3P-S4-RB

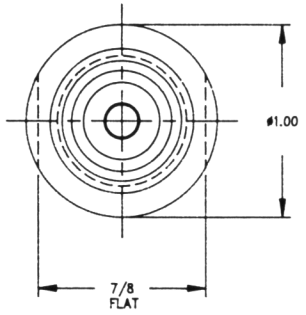

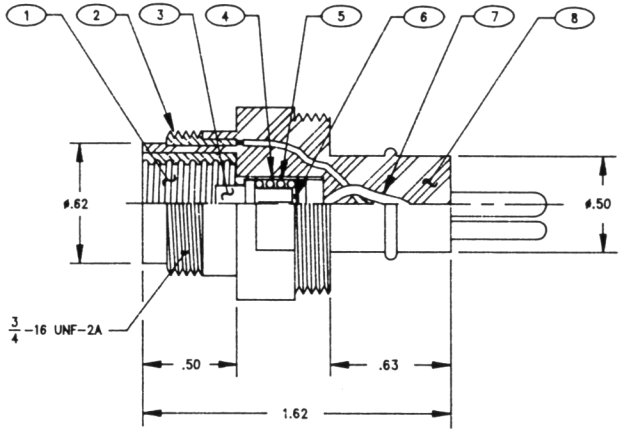

SECTION A-A

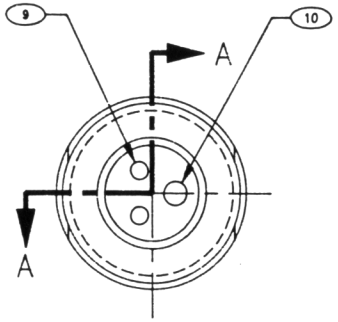

ITEM	QTY REQD	FSCM NO.	PART OR IDENTIFYING NO.	NOMENCLATURE OR DESCRIPTION	MATERIAL SPECIFICATION
10	1	15789	3627	#10 AWG CONTACT PIN	2
9	2	15789	3626	#14 AWG CONTACT PIN	2
8	1	15789	6788-405	SEM-S4-RB BODY	1
7	3	——	——	#18 AWG TEFLON WIRE	——
6	1	15789	6788-290	"T" CENTER CONTACT	4
5	AR	15789	LC-035C-1	"T" LEE COMPRESION SPRING	5
4	1	15789	6788-292	"T" SLEEVE	5
3	1	15789	6788-291	"T" CENTER SOCKET	3
2	1	15789	6788-295	LAMP SOCKET, GROUNDING THREAD RING HEX BODY	3
1	1	15789	6788-293	LAMP SOCKET, BALLAST RING	3

PARTS LIST SEACON®

ASSY HARDWARE	PART NO.

APPLICATION

UNLESS OTHERWISE SPECIFIED DIMENSIONS ARE IN INCHES
TOLERANCES ARE:
FRACTIONS ± 1/16 DECIMALS .XX± .015 .XXX± .005 ANGLES ±1/2°
BREAK ALL EDGES & CORNERS .015 RAD. ALL DIA. TO BE CONCENTRIC WITHIN .004 TIR
FINISH 125

DO NOT SCALE DRAWING

CONTRACT NO.

APPROVALS	DATE
DRAWN TRUYET N	950608
CHECKED LAI PHAM	950626
ISSUED	

SEACON BRANTNER & ASSOCIATES, INC.
MAIN PLANT 1240 VERNON WAY EL CAJON, CALIF. 92020

SEM-3P-S4-RB
XSC-3-BCL/LAMP SOCKET

SIZE	FSCM NO.	DWG NO.	REV
C	15789	6788-105	A

SCALE 2/1 SHEET 1 OF 1

75-2

SEM SERIES LIGHT CONNECTORS

SEM2P-S

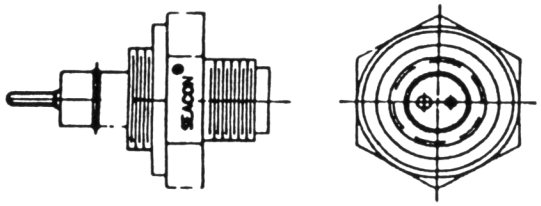

Description: 2-Pin Glass Reinforced Epoxy Bulkhead Light Connector with sockets on the low pressure side.
Utilizes a MR-16 lamp
Mating Connector: RMG-2-FS
Cable: 12, 14 or 16 AWG

SEM2P-S-XT

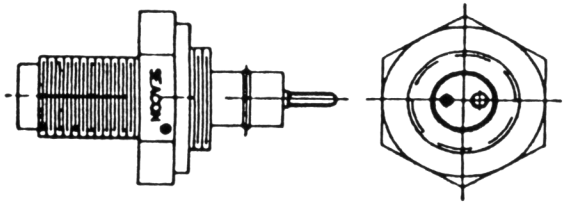

Description: Same as SEM2P-S above except longer thread.

SEM2P-S4

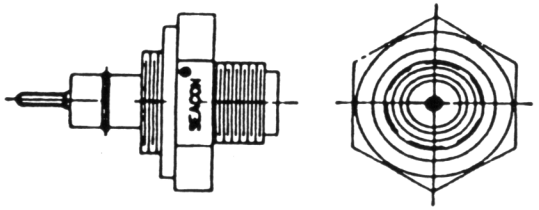

Description: 2-Pin Glass Reinforced Epoxy Bulkhead Light Connector. Inboard side utilizes a S4 socket to accept a Mini-Can base lamp.
Mating Connector: RMG-2-FS
Cable: 12, 14 or 16 AWG

SEM3P-C

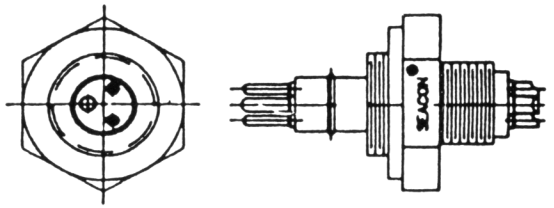

Description: 3-Pin Glass Reinforced Epoxy Bulkhead Light Connector. Utilizes solder cups on the low pressure side.
Mating Connector: P/N RMG-3-FS
Cable: 12, 14 or 16 AWG

SEM3PK-C

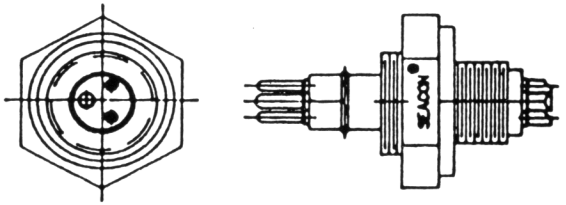

Description: 3-Pin Glass Reinforced Epoxy Bulkhead Light Connector with reversed hex. Utilizes solder cups on the low pressure side.
Mating Connector: RMG-3-FS
Cable: 12, 14 or 16 AWG

SEM3P-S4

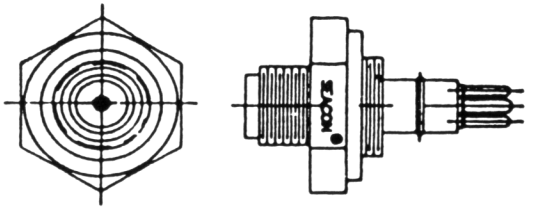

Description: 3-Pin Glass Reinforced Epoxy Bulkhead Light Connector. Inboard side utilizes a S4 socket to accept a Mini-Can base lamp.
Mating Connector: RMG-3-FS
Cable: 12, 14 or 16 AWG

SEACON®

AC

AUV/UUV CONNECTOR

DESIGN CONSIDERATIONS/RECOMMENDATIONS

BULKHEAD RECEPTACLE

1. **Material:** Two general categories to be considered are metals and engineering plastics. Titanium is the recommended metal. Glass Reinforced Epoxy per SEA CON® XS-2748 is the recommended plastic. Other materials may be recommended by customer.

2. **Mounting:** Three common mounting configurations are shown. Double O-Ring seals are utilized where appropriate. Other mounting requirements may be specified by customer.

CABLE PLUG

1. **Material:** Two general categories to be considered are metals and engineering plastics. Titanium or Glass Reinforced Epoxy per SEA CON® XS-2748 are the recommended materials within their respective categories. The metallic engaging nut should be Titanium.

2. **Cable Terminations:** Cables may be encapsulated with an elastomeric compound or a PBOF system may be implemented.

3. **Cathodic Delamination:** If the mission profile of the AUV/UUV requires long term deployment then cathodic delamination must be addressed. Glass Reinforced Epoxy should be used to prevent this phenomenon in the encapsulated system. If the PBOF system is utilized, either Titanium or Glass Reinforced Epoxy should be used.

GENERAL

1. **Diameter:** Connectors range in diameter from 1.25 to 2.25 inches (or larger).
2. **Contact Configurations:**
   - A) Signal: Maximum contact density up to 131 No. 22 AWG.
   - B) Power: Contact sizes up to No. 10 AWG with working voltages ranging from 600 VRMS to 3000 VRMS.
3. **Contact Material:** Copper alloy and gold plated per MIL-G-45204.
4. **Underwater Mateable:** Underwater mateability can be implemented into these connectors or other types of connectors.
5. **Fiber Optic:** Multi-Mode Fiber Optics can be implemented into these connectors or other types of connectors. Hybrid connectors are also a viable option.

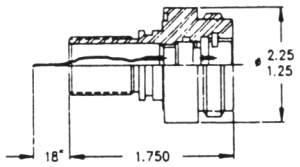

Bulkhead Receptacle

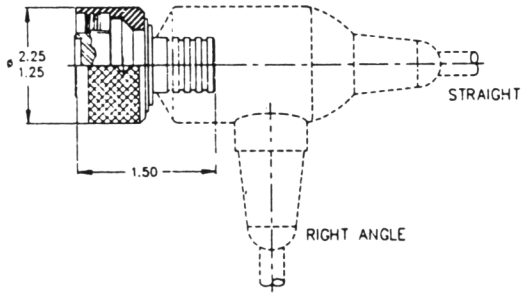

Cable Plug

Optional Mounting Configurations

1) Weldable

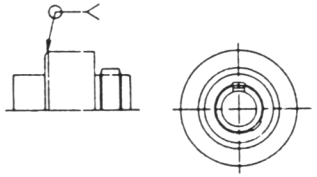

2) Flange

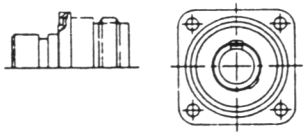

Optional Cable Terminations

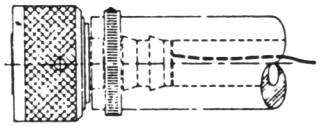

SEA CON®

A

TOWED ARRAY CONNECTORS

Sea Connections Systems Limited have been responsible for the design of many new electrical and electro optical inserts that are used in critical positions within the military towed array field.

These arrays are used on both submarines and surface ships but the fundamental criteria will always be to reduce the overall diameter and to increase the data tranmission rates.

To achieve these targets we have called upon the expertise of our various divisions within the SEA CON® group to provide fibre optic and glass sealing technology with the ultimate result being a high specification and extremely reliable component.

The technology that has been developed in these towed array inserts for military applications can equally be utilized into areas such as geophysical towed arrays and also into our regular connector specifications. As all of our special towed array inserts have been designed around a customer specification we will always be able to provide an insert whether electrical, electro optic or pure optical for any application.

TOWED ARRAY OPTIONS AND CAPABILITIES

Open face pressure rated
Glass to metal sealed
Electro optical
Hermaphroditic style option
Multimode or single mode fibres

DWG. NO.	SH	REV.

LE-222-HI

NOTES:

1. MATERIAL: GLASS REINFORCED EPOXY B/A XS-2748
2. MATERIAL: COPPER ALLOY & GOLD PLATED PER MIL-G-45204
3. DIMENSIONS IN BRACES [], ARE FOR MILLIMETER REFERENCE ONLY
4. VOLTAGE: 600 VDC
5. CURRENT : 3 AMPS
6. OPEN FACE PRESSURE: 2000 PSI [138 BAR], WHEN INSERT IS INSTALLED IN A SEACON APPROVED SHELL DESIGN.
7. TEST IR AT 1000 VDC IR TO BE > 1000 MΩ
8. TEST DIELECTRIC AT 600 VAC

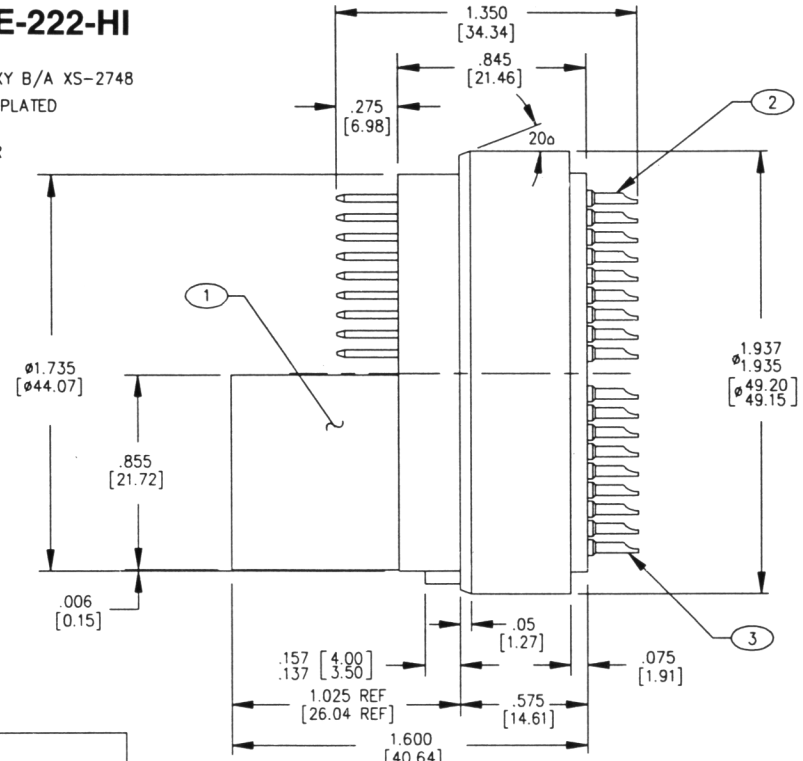

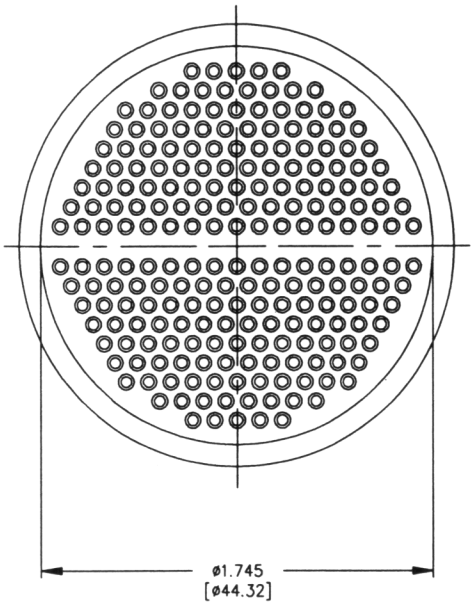

VIEW A-A
SCALE: 1=1

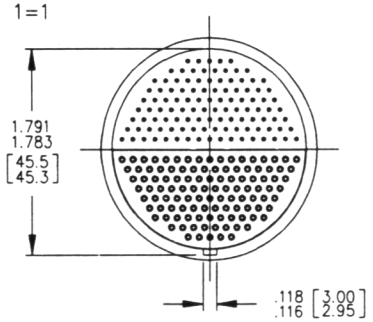

REVISIONS				
REV.	REF ECO. NO.	DESCRIPTION	DATE	APPROVED
A	6424	REVISED LENGTH	90-4-17	D.S.
B	7537	ADD KEY, NOTE 7 & 8, REV PRESS	930708	KMN
C	8623	REMOVED NUMBERS ON FACE PATTERN	950413	LP

ITEM	QTY REQD	FSCM NO.	PART OR IDENTIFYING NO.	NOMENCLATURE OR DESCRIPTION	MATERIAL SPECIFICATION
3	111	15789	6862-296	CONTACT SOCKET	2.
2	111	15789	6862-295	CONTACT PIN	2.
1	1	15789	6862-102	LE-222-HI BODY	1.

PARTS LIST SEACON®

ASSY HARDWARE	PART NO.
APPLICATION	

UNLESS OTHERWISE SPECIFIED DIMENSIONS ARE IN INCHES
TOLERANCES ARE:
FRACTIONS ± 1/16 DECIMALS .XX± .015 .XXX± .005 ANGLES ±1/2°
BREAK ALL EDGES & CORNERS .015 RAD. ALL DIA. TO BE CONCENTRIC WITHIN .004 TIR
FINISH 125

DO NOT SCALE DRAWING

CONTRACT NO.

APPROVALS		DATE
DRAWN	K.RIDGELS	89-12-07
CHECKED	LAI PHAM	
ISSUED	D.SEILHAN	90-01-11
	K.NORTHUP	

BRANTNER & ASSOCIATES, INC.
MAIN PLANT 1240 VERNON WAY EL CAJON, CALIF. 92020

LE-222-HI

SIZE	FSCM NO.	DWG NO.	REV
B	15789	6862-102	C

SCALE 2/1 SHEET OF

SEACON

A

DWG. NO.	SH	REV.

TAL-60-HC INSERT

NOTES:

1. MATERIAL: GLASS REINFORCED EPOXY B/A XS-2748.
2. MATERIAL: COPPER ALLOY & GOLD PLATED PER MIL-G-45204.
3. 300 BAR (4,350 PSI) FROM THE SOLDER CUP SIDE, INSERT MUST BE MATED TO ANOTHER MATE AND HAVE EQUAL PRESSURE ON BOTH SOLDER CUP ENDS.
4. VOLTAGE RATING:
   a) #22 AWG @ 600VDC
   b) #16 AWG @ 2200VDC
5. 32/ DIAMETER IS FOR O-RING SEAL IN CUSTOMER HOUSING. (REF 2-025 AND 8-025)

REVISIONS				
REV.	REF ECO. NO.	DESCRIPTION	DATE	APPROVED
A	6529	REVISE DIM/CONTACT PATTERN	900923	LP
B	6555	REVISE DWG & DIM	900925	LP
C	6561	REVISE DIM. FROM .995 TO .955	901003	LP
D	8158	REV. PART NO. FROM ITEM 5	940609	LP

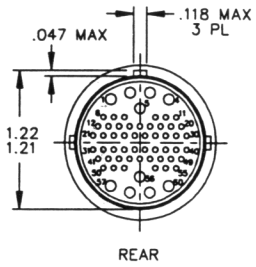

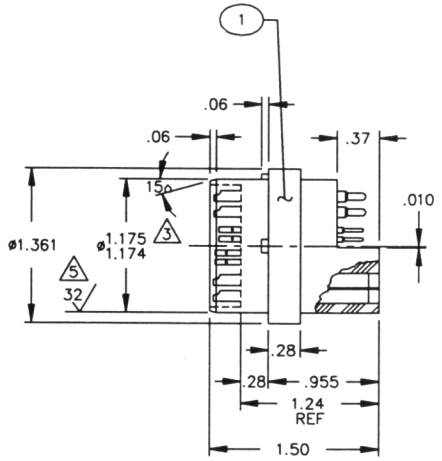

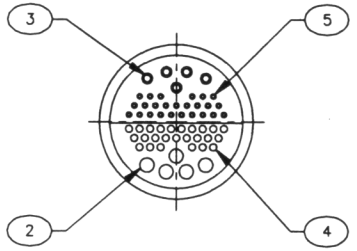

TAL-60-HC REAR VIEW

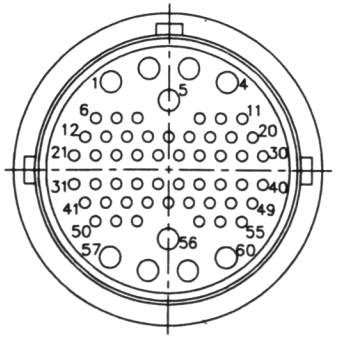

SCALE: 2=1

ITEM	QTY REQD	FSCM NO.	PART OR IDENTIFYING NO.	NOMENCLATURE OR DESCRIPTION	MATERIAL SPECIFICATION
5	25	15789	3560	#22 AWG CONTACT PIN	2
4	25	15789	2454	#22 AWG CONTACT SOCKET	2
3	5	15789	3032	#16 AWG CONTACT PIN	2
2	5	15789	2014-2	#16 AWG CONTACT SOCKET	2
1	1	15789	6872-105	TA-HC INSERT	1

PARTS LIST SEACON®

PARBAK	8-025
O-RING	2-025
ASSY HARDWARE	PART NO.
APPLICATION	

UNLESS OTHERWISE SPECIFIED DIMENSIONS ARE IN INCHES
TOLERANCES ARE:
FRACTIONS ± 1/16 DECIMALS .XX± .015 .XXX± .005 ANGLES ±1/2°
BREAK ALL EDGES & CORNERS .015
RAD. ALL DIA. TO BE CONCENTRIC WITHIN .004 TIR
FINISH 125/
DO NOT SCALE DRAWING

CONTRACT NO.

APPROVALS	DATE
DRAWN M. JUAREZ	900312
CHECKED LAI PHAM	900923
ISSUED D. SEILHAN	900316

BRANTNER & ASSOCIATES, INC.
MAIN PLANT 1240 VERNON WAY EL CAJON, CALIF. 92020

TAL-60-HC INSERT

SIZE	FSCM NO.	DWG NO.	REV
B	15789	6872-105	D

SCALE 1/1 SHEET OF

SEACON®
A

DWG. NO.	SH	REV.

TAM-60-HC INSERT

NOTES:

1. MATERIAL: GLASS REINFORCED EPOXY B/A XS-2748.
2. MATERIAL: COPPER ALLOY & GOLD PLATED PER MIL-G-45204.
3. 500 BAR (7,250 PSI) FROM THE SOLDER CUP SIDE, INSERT MUST BE MATED TO ANOTHER MATE AND HAVE EQUAL PRESSURE ON BOTH SOLDER CUP ENDS.
4. VOLTAGE RATING:
   a) #22 AWG @ 600VDC
   b) #16 AWG @ 2200VDC
5. 32 DIAMETER IS FOR O-RING SEAL IN CUSTOMER HOUSING. (REF 2-030 AND 8-030)

REVISIONS				
REV.	REF ECO. NO.	DESCRIPTION	DATE	APPROVED
A	6528	REVISE DIM/CONTACT PATTERN	900823	LP
B	6554	REVISE DWG & DIM	900925	LP
C	6562	REVISE DIM. FROM .995 TO .955	901003	LP
D	6567	REVISE DIM AND CONTACT NO.	901005	LP

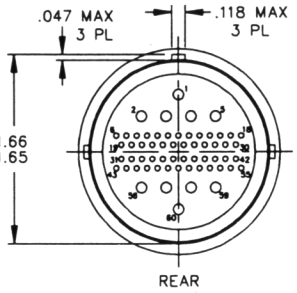

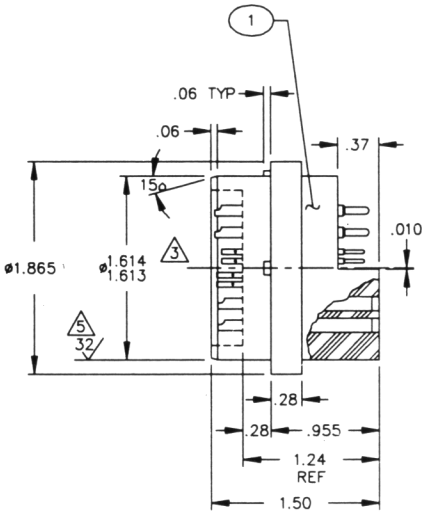

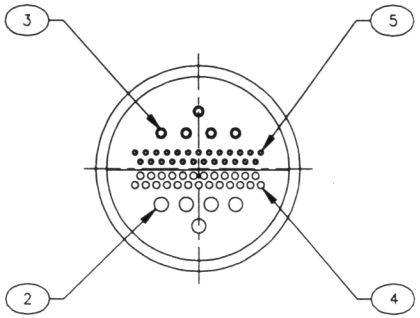

TAM-60-HC REAR VIEW

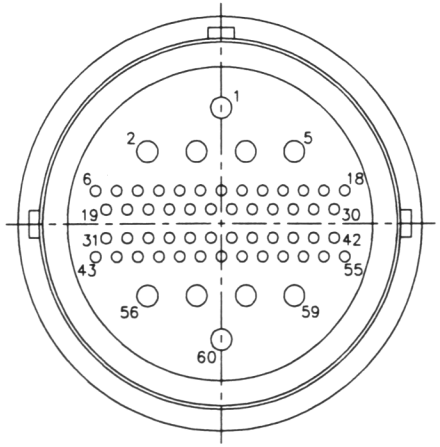

SCALE: 2=1

ITEM	QTY REQD	FSCM NO.	PART OR IDENTIFYING NO.	NOMENCLATURE OR DESCRIPTION	MATERIAL SPECIFICATION
5	25	15789	3560	#22 AWG CONTACT PIN	2
4	25	15789	2454	#22 AWG CONTACT SOCKET	2
3	5	15789	3032	#16 AWG CONTACT PIN	2
2	5	15789	2014-2	#16 AWG CONTACT SOCKET	2
1	1	15789	6872-103	TA-HC INSERT	1

PARTS LIST SEACON®

PARBAK	8-030
O-RING	2-030
ASSY HARDWARE	PART NO.

APPLICATION

UNLESS OTHERWISE SPECIFIED DIMENSIONS ARE IN INCHES
TOLERANCES ARE:
FRACTIONS ± 1/32 DECIMALS .XX± .015 .XXX± .005 ANGLES ±1/2°
BREAK ALL EDGES & CORNERS .015 RAD. ALL DIA. TO BE CONCENTRIC WITHIN .004 TIR
FINISH 125

DO NOT SCALE DRAWING

CONTRACT NO.

APPROVALS	DATE
DRAWN M. JUAREZ	900312
CHECKED LAI PHAM	900823
ISSUED D. SEILHAN	900316

BRANTNER & ASSOCIATES, INC.
MAIN PLANT 1240 VERNON WAY EL CAJON, CALIF. 92020

TAM-60-HC INSERT

SIZE	FSCM NO.	DWG NO.	REV
B	15789	6872-103	D

SCALE 1/1 SHEET OF

SEACON®

A

DWG. NO.	SH	REV.

TA-76-HC-DRA

REVISIONS				
REV.	REF ECO. NO.	DESCRIPTION	DATE	APPROVED
A	6971	ADD DIMS. REF ECO	920108	KMN

NOTES:

1. MATERIAL: GLASS RENFORCED EPOXY B/A XS-2748
2. MATERIAL: COPPER ALLOY & GOLD PLATED PER MIL-G-45204.
3. MATERIAL: VITON
4. 5,000 PSI FROM SOLDER CUP SIDE.
5. SPECIFICATIONS:
   a) #22 AWG @ 600VDC
   b) 2.5 AMPS PER CONTACT

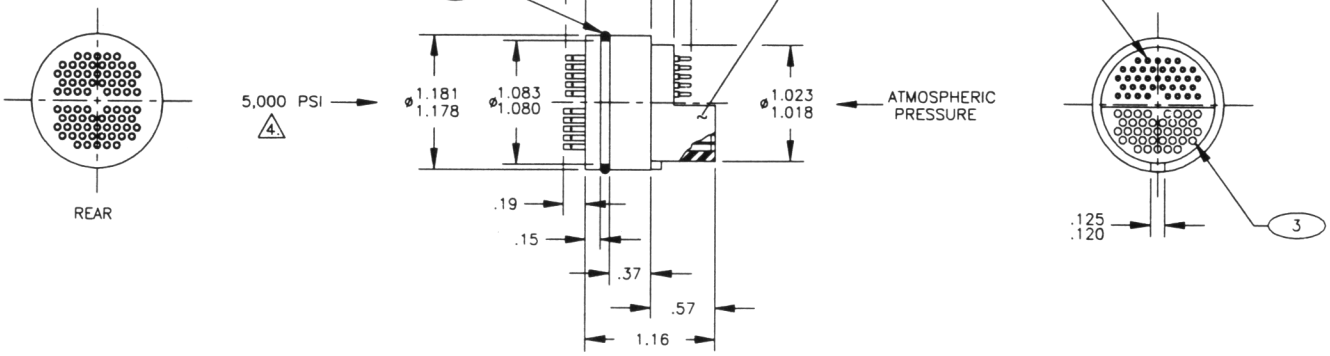

TA-76-HC REAR VIEW

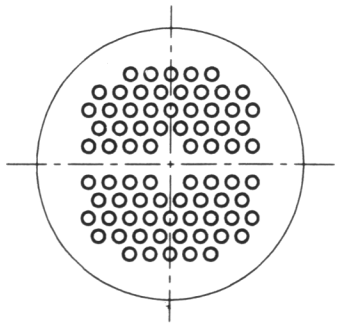

SCALE: 2=1

ITEM	QTY REQD	FSCM NO.	PART OR IDENTIFYING NO.	NOMENCLATURE OR DESCRIPTION	MATERIAL SPECIFICATION
4	1	—	2-023	O-RING	3
3	38	15789	2454	#22 AWG CONTACT SOCKET	2
2	38	15789	3526	#22 AWG CONTACT PIN	2
1	1	15789	6959-102	TA-HC INSERT	1

PARTS LIST SEACON®

ASSY HARDWARE	PART NO.

APPLICATION

UNLESS OTHERWISE SPECIFIED DIMENSIONS ARE IN INCHES
TOLERANCES ARE:
FRACTIONS ± 1/32 DECIMALS .XX± .015 .XXX± .005 ANGLES ±1/2°
BREAK ALL EDGES & CORNERS .015 RAD. ALL DIA. TO BE CONCENTRIC WITHIN .004 TIR
FINISH 125

DO NOT SCALE DRAWING

CONTRACT NO.

APPROVALS	DATE
DRAWN K.RIDGELS	92-01-06
CHECKED K. NORTHUP	92-01-08
ISSUED	

SEACON BRANTNER & ASSOCIATES, INC.
MAIN PLANT 1240 VERNON WAY EL CAJON, CALIF. 92020

TA-76-HC-DRA

SIZE	FSCM NO.	DWG NO.	REV
B	15789	6959-102	A

SCALE 1/1 SHEET OF

SEACON

A

DWG. NO.	SH	REV.

REVISIONS				
REV.	REF ECO. NO.	DESCRIPTION	DATE	APPROVED
A	7367	REVISE DIMENSIONS PER E.C.O.	930113	KMN
B	7391	REVISE PARTS LIST & ADD KEY	930205	DS
C	8311	ADD SOLDER CUP DETAIL	941003	KMN
D	8388	REV DIM	941019	KMN

NOTES:

1. MATERIAL: GLASS REINFORCED EPOXY B/A XS-2478
2. MATERIAL: COPPER ALLOY & GOLD PLATED PER MIL-G-45204.
3. MATERIAL: BUNA-N 70, DURO

DRA-106-INSERT

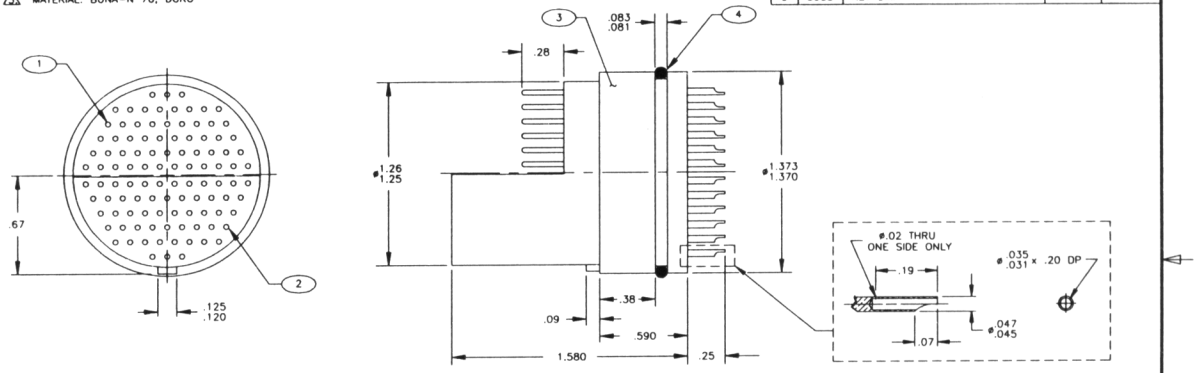

ITEM	QTY. REQD	FSCM NO.	PART OR IDENTIFYING NO.	NOMENCLATURE OR DESCRIPTION	MATERIAL SPECIFICATION
4	1	——	2-026	O-RING	3
3	1	15789	7045-272	DRA-106-INSERT BODY	1
2	5.3	15789	7045-291	CONTACT SOCKET	2
1	5.3	15789	7045-290	CONTACT PIN	2

PARTS LIST SEACON®

ASSY HARDWARE	PART NO.
APPLICATION	

UNLESS OTHERWISE SPECIFIED DIMENSIONS ARE IN INCHES
TOLERANCES ARE:
FRACTIONS ± 1/16 DECIMALS XX± .015 XXX± .005 ANGLES ±1/2°
BREAK ALL EDGES & CORNERS .015 RAD. ALL DIA. TO BE CONCENTRIC WITHIN .004 TIR
FINISH 125
DO NOT SCALE DRAWING

CONTRACT NO.

APPROVALS	DATE
DRAWN K. RIDGELS	921015
CHECKED K. NORTHUP	921015
ISSUED	

BRANTNER & ASSOCIATES, INC.
MAIN PLANT 1240 VERNON WAY EL CAJON, CALIF. 92020

DRA-106-INSERT SCS

SIZE	FSCM NO.	DWG NO.	REV
B	15789	7045-102	D

SCALE 2/1 SHEET OF

DWG. NO.	SH	REV.

REVISIONS				
REV.	REF ECO. NO.	DESCRIPTION	DATE	APPROVED
A	8620	ADD KEYS TO DRA CONNECTORS	950407	LP
B	8644	ADD DIM TO KEYS	950413	LP

NOTES:

1. MATERIAL: GLASS REINFORCED EPOXY B/A XS-2748
2. MATERIAL: COPPER ALLOY & GOLD PLATED PER MIL-G-45204.
3. MATERIAL: BUNA-N, 70 DURO.
4. PRESSURE RATING: 5,000 PSI OPEN FACE (FROM SOLDER CUP SIDE).
5. DIMENSIONS IN BRACKETS [] INDICATES DIMENSIONS IN MILLIMETERS.

DRA-12#22/2#14-INSERT

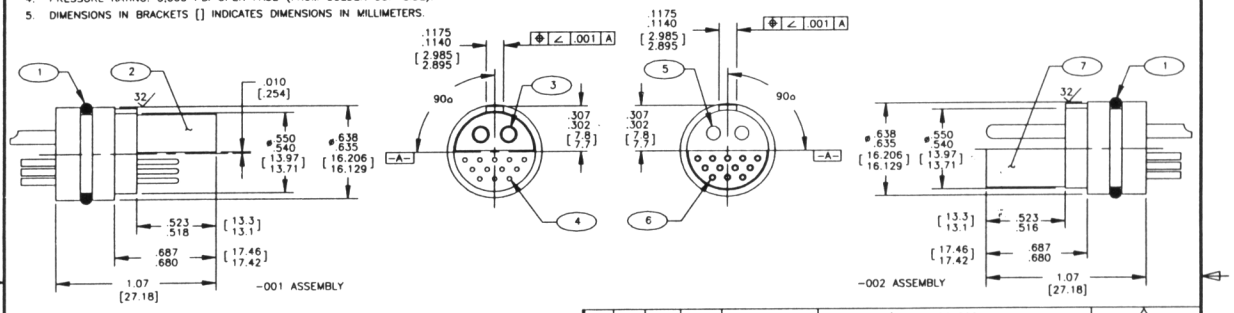

ITEM	QTY PER -002	QTY PER -001	FSCM NO.	PART OR IDENTIFYING NO.	NOMENCLATURE OR DESCRIPTION	MATERIAL SPECIFICATION
7	1		15789	7045-271	DRA-12S/2P-INSERT BODY	1
6	12		15789	2454	#22 AWG CONTACT SOCKET	2
5	2		15789	3450	#14 AWG CONTACT PIN	2
4		12	15789	3211	#22 AWG CONTACT PIN	2
3		2	15789	2015	#14 AWG CONTACT SOCKET	2
2		1	15789	7045-270	DRA-12P/2S-INSERT BODY	1
1	1	1	——	2-014	O-RING	3
	REF		15789	7045-103-002	DRA-12S/2P-INSERT & ASSY	
		REF	15789	7045-103-001	DRA-2S/12P-INSERT & ASSY	

PARTS LIST SEACON®

ASSY HARDWARE	PART NO.
APPLICATION	

UNLESS OTHERWISE SPECIFIED DIMENSIONS ARE IN INCHES
TOLERANCES ARE:
FRACTIONS ± 1/16 DECIMALS XX± .015 XXX± .005 ANGLES ±1/2°
BREAK ALL EDGES & CORNERS .015 RAD. ALL DIA. TO BE CONCENTRIC WITHIN .004 TIR
FINISH 125
DO NOT SCALE DRAWING

CONTRACT NO.

APPROVALS	DATE
DRAWN K. RIDGELS	921030
CHECKED K. NORTHUP	921113
ISSUED	

BRANTNER & ASSOCIATES, INC.
MAIN PLANT 1240 VERNON WAY EL CAJON, CALIF. 92020

DRA-12#22/2#14-INSERT SCS

SIZE	FSCM NO.	DWG NO.	REV
B	15789	7045-103	B

SCALE 2/1 SHEET OF

SEACON® A

ELECTRICAL CABLES
RUBBER AND SPECIALIZED MOLDED CABLE ASSEMBLIES

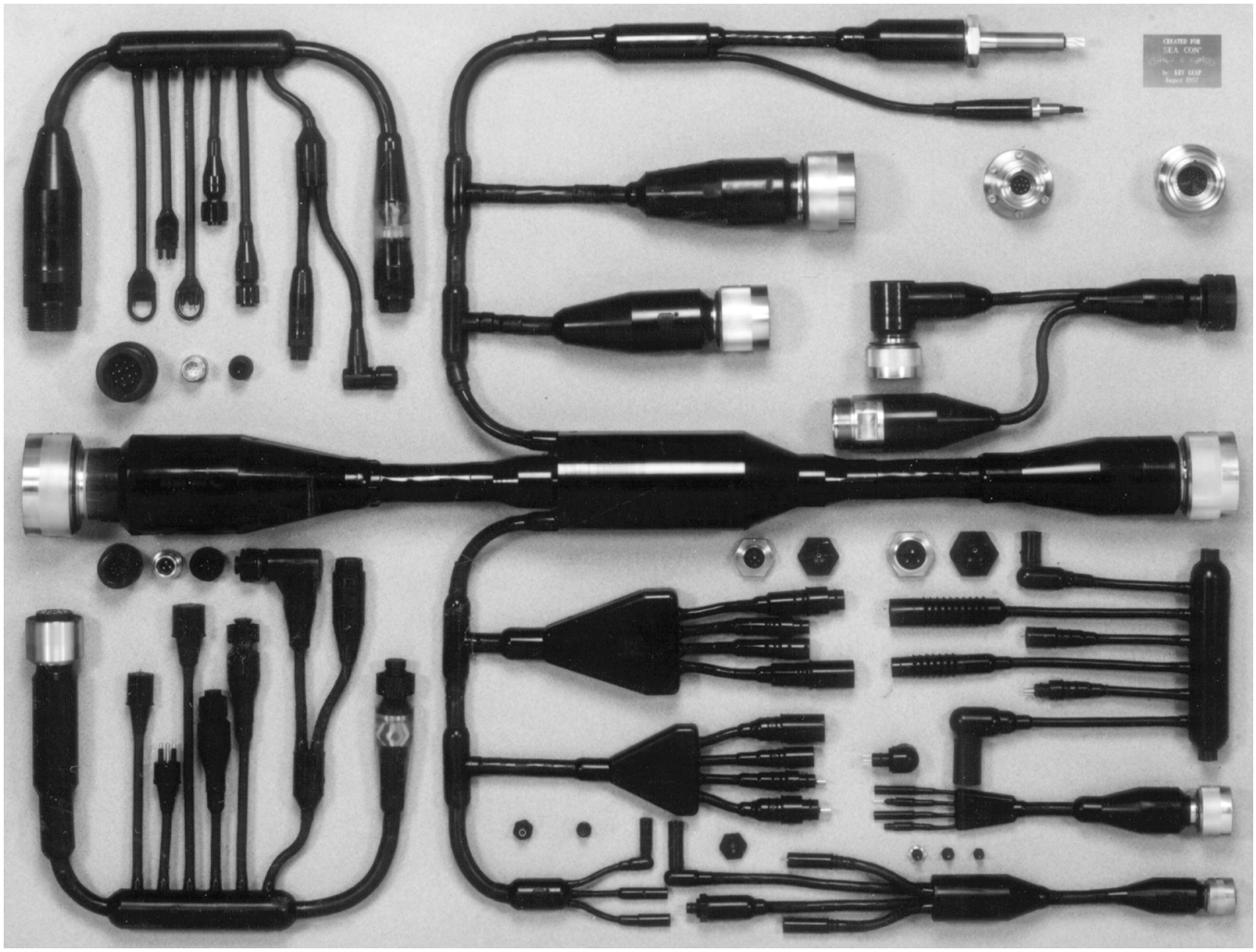

SEA CON® can offer a comprehensive solution for all of your rubber molding requirements from connector design to a complete cable assembly for most applications.

Neoprene, hypalon and other rubber materials used in the manufacture of molded products all comply with strict testing procedures including hydrostatic, electrical and environmental, performed by our experienced quality personnel. SEA CON® also molds in polyurethane and chockfast orange epoxy for specialized military requirements and other high temperatures epoxies for hostile environments where reliability is critical.

Our assemblies are being used by the U.S. Navy on both surface ships and submarines including the Deep Sea Rescue (D.S.R.V.). Mine countermeasure and sonar systems for the military along with commercial applications where high performance is required, such as down hole monitoring and undersea exploration, all utilize SEA CON® assemblies.

We follow strict in-house and government approved molding procedures for the manufacture of high performance molded assemblies. From large diameter shielded cable to the extremely small single conductor cable, with polyurethane, neoprene or polyethlene jackets; all are standard for us. Please contact us with your requirements.

ELECTRICAL CABLES

No. of CDRs	Cable Part No.	CDR. Size	CDR. Material	CDR. Insulation	Outer Jacket	Dia-meter	DC volt-age	Amps per CDR.	DC Res. Ohms per 1000 ft.	Wt. per 1000 ft.	Breaking Strength
1	IN2	20 AWG	CAD BRONZE	RUBBER	NEOPRENE	.149	300	3	12	16	65
1	IN2-T	20 AWG	CAD BRONZE	TEFLON	NEOPRENE	.148	600	3	12	13	65
1	16/1 SO	16 AWG	COPPER	RUBBER	NEOPRENE	.210	600	10	4.2	30	80
1	14/ SO	14 AWG	COPPER	RUBBER	NEOPRENE	.260	600	15	2.6	45	115
1	8/1 SO	8 AWG	COPPER	RUBBER	NEOPRENE	.440	600	45	.65	135	280
1	0/1 SO	0 AWG	COPPER	RUBBER	NEOPRENE	.750	600	200	.10	550	3075
COAX											
1 + SHLD	CN4(RG 58)	20 AWG	COPPER	FEP	NEOPRENE	.251	5000	4	11	46	50
1 + SHLD	CN5(RG 58)	20 AWG	COPPER	FEP	NEOPRENE	.300	5000	4	11	57	50
2 + SHLD	2N5-S	20 AWG	CAD BRONZE	RUBBER	NEOPRENE	.375	600	4	12	78	200
2	18/2 SO	18 AWG	COPPER	RUBBER	NEOPRENE	.390	600	7	6.7	86	75
2	16/2 SO	16 AWG	COPPER	RUBBER	NEOPRENE	.405	600	10	4.2	94	140
2	14/2 SO	14 AWG	COPPER	RUBBER	NEOPRENE	.530	600	15	2.6	158	225
2	8/2 W	8 AWG	COPPER	RUBBER	NEOPRENE	.810	600	35	.65	370	1000
3	3N5	20 AWG	CAD BRONZE	RUBBER	NEOPRENE	.343	600	3	12	60	200
3	18/3 SO	18 AWG	COPPER	RUBBER	NEOPRENE	.370	600	7	6.7	95	125
3 + SHLD	18/3 SO S	18 AWG	COPPER	RUBBER	NEOPRENE	.345	600	7	6.7	102	145
3	16/3 SO	16 AWG	COPPER	RUBBER	NEOPRENE	.427	600	10	4.2	110	210
3	14/3 SO	14 AWG	COPPER	RUBBER	NEOPRENE	.560	600	15	2.6	184	260
3	12/3 SO	12 AWG	COPPER	RUBBER	NEOPRENE	.635	600	20	1.2	244	320
3	8/3 W	8 AWG	COPPER	RUBBER	NEOPRENE	.910	600	50	.65	480	1500
4	18/4 SO	18 AWG	COPPER	RUBBER	NEOPRENE	.435	600	6	7.0	112	175
4	16/4 SO	16 AWG	COPPER	RUBBER	NEOPRENE	.485	600	8	4.8	144	280
4	14/4 SO	14 AWG	COPPER	RUBBER	NEOPRENE	.605	600	12	2.8	224	340
4	12/4 SO	12 AWG	COPPER	RUBBER	NEOPRENE	.665	600	16	1.2	282	400
4	8/4 W	8 AWG	COPPER	RUBBER	NEOPRENE	.990	600	45	.65	630	2000
5	18/5 SO	18 AWG	COPPER	RUBBER	NEOPRENE	.495	600	6	7	128	230
5	16/5 SO	16 AWG	COPPER	RUBBER	NEOPRENE	.525	600	8	4.9	156	260
6	18/6 SO	18 AWG	COPPER	RUBBER	NEOPRENE	.525	600	6	7	146	250
6	16/6 SO	16 AWG	COPPER	RUBBER	NEOPRENE	.565	600	8	4.9	178	290
6 + SHLD	18/6 SO S	18 AWG	COPPER	RUBBER	NEOPRENE	.555	350	6	7	145	280
6 + SHLD	Columbia 01206	18 AWG	COPPER	RUBBER	NEOPRENE	.370	450	6	7	130	200
7	18/7 SO	18 AWG	COPPER	RUBBER	NEOPRENE	.565	600	5	7.5	165	280
7	16/7 SO	16 AWG	COPPER	RUBBER	NEOPRENE	.605	600	7	5.4	202	320
8	18/8 SO	18 AWG	COPPER	RUBBER	NEOPRENE	.600	600	5	7.5	184	300
8	16/8 SO	16 AWG	COPPER	RUBBER	NEOPRENE	.645	600	7	5.4	222	350
10	18/10 SO	18 AWG	COPPER	RUBBER	NEOPRENE	.640	600	5	7.5	208	360
10	Columbia #3610	20 AWG	COPPER	RUBBER	NEOPRENE	.410	350	3			
12	18/12 SO	18 AWG	COPPER	RUBBER	NEOPRENE	.660	600	5	7.5	225	370
12	16/12 SO	16 AWG	COPPER	RUBBER	NEOPRENE	.740	600	7	5.4	305	420
16	18/16 SO	18 AWG	COPPER	RUBBER	NEOPRENE	.760	600	5	7.5	314	440
16	16/16 SO	16 AWG	COPPER	RUBBER	NEOPRENE	.825	600	7	5.4	386	600
20	18/20 SO	18 AWG	COPPER	RUBBER	NEOPRENE	.835	600	5	7.5	378	510
24	18/24 SO	18 AWG	COPPER	RUBBER	NEOPRENE	.910	600	5	7.5	434	560
30	18/30 SO	18 AWG	COPPER	RUBBER	NEOPRENE	.995	600	4	8.8	542	1190
37	18/37 SO	18 AWG	COPPER	RUBBER	NEOPRENE	1.072	600	4	8.8	656	1475
40	18/40 SO	18 AWG	COPPER	RUBBER	NEOPRENE	1.136	600	4	8.8	703	1550
60	18/60 SO	18 AWG	COPPER	RUBBER	NEOPRENE	1.301	600	4	8.8	953	1850
60	16/60 SO	16 AWG	COPPER	RUBBER	NEOPRENE	1.465	600	5	7.0	1260	2400

Kevlar Braid, Center Stress Core and Armour Terminations are available.
Please contact the factory for more details.

SEA CON® ABC

ELECTRICAL CONTACT SIZES

CONTACT AWG	DIAMETER IN INCHES	AMPACITY (AMPS)
#28 AWG	.015”	0.5
#22 AWG	.031”	2.5
#20 AWG	.040”	4
#16 AWG	.062”	13
#14 AWG	.093”	16
#10 AWG	.125”	23
#8 AWG	.156”	50
#6 AWG	.218”	65
#4 AWG	.255”	90
#1/0 AWG	.355”	200

NOTE: The ampacity is computed at temperature range of + 30° F + 68° F.
Above 70° F the ampacity drops.
Pins and sockets are bronze alloy. Pins are gold plated per MIL-G-45204.
Most contacts conform to MIL-C-4217.

WIRE ROPES

NOTE: These types of stranded, galvanized steel wire ropes are the types used as center stress cores in E.M. Cables Stainless Steel wire ropes have almost identical (slightly less) breaking strength.

DIAMETER (IN INCHES)	BREAKING STRENGTH (IN POUNDS)
1 / 32	185
3 / 64	300
1 / 16	500
5 / 64	800
3 / 32	1,200
7 / 64	1,600
1 / 8	2,100
5 / 32	3,300
3 / 16	4,700
7 / 32	6,300
1 / 4	8,200
9 / 32	10,300
5 / 16	12,500
3 / 8	14,400
7 / 16	17,600
1 / 2	22,800
5 / 8	35,000
3 / 4	49,600
7 / 8	66,500
1	85,400
1-1 / 4	129,400
1-3 / 8	153,600
1-1/2	180,500

ALL WET™ CONNECTORS

TYPE OF CONNECTORS	MAX. CABLE O.D.	
AWL	1/2	(.500)
AWM	7-8	(.875)
AWO	1 1/4	(1.250)
FAWL	3/8	(.375)

GLASS REINFORCED EPOXY SERIES

TYPE OF CONNECTORS	MAX. CABLE O.D.	
XSEE-CCP	1	(1.000)
XSEE-CCP R/A	1/2	(.500)
XSEE-CCR	5/8	(6.25)
XSJ-CCP	7/8	(.875)
XSJ-CCP R/A	1/2	(.500)
XSJ-CCR	3/4	(.750)
XSJ-CCR-R/A	3/4	(.750)
XSJJ-CCP	7/8	(.875)
XSJJ-CCP R/A	1/2	(.500)
XSJJ-CCR	3/4	(.750)
XSJJ-CCR R/A	3/4	(.750)
XSL-CCP	1 3/4	(1.750)
XSL-CCP R/A	3/4	(.750)
XSL-CCP DOUBLE R/A	15/16	(.937)
XSL-CCR R/A	1 3/8	(1.375)
XSL-CCR	1	(1.000)
XSM-CCP	1 5/8	(1.625)
XSM-CCP R/A	1 1/4	(1.250)
XSM-CCR	1 1/8	(1.125)
XSM-CCR R/A	1 1/4	(1.250)

METAL SHELL SERIES CONNECTORS

TYPE OF CONNECTORS	MAX. CABLE O.D.	
SDVG or MSSG	1 3/4	(1.750)
SDVG or MSSG	3/4	(.750)
SDVG or MSSG	1/2	(.500)
MSSK-CCP	15/16	(.937)
MSSK-CCP R/A	7/8	(.875)
MSSK-CCR	13/16	(.812)
MSSL-CCP	1	(1.000)
MSSL-CCP R/A	1	(1.000)
MSSL-CCR	1	(1.000)
MSSM-CCP	1 3/16	(1.812)
MSSM-CCP R/A	1 7/32	(1.218)
MSSM-CCR	1 1/4	(1.250)
MSSO-CCP	1 3/4	(1.750)
MSSO-CCP R/A	1 3/4	(1.750)
MSSO-CCR	1 3/4	(1.750)
MSSP-CCP	1 7/8	(1.875)
MSSP-CCP R/A	1 7/8	(1.875)
MSSP-CCR	1 7/8	(1.875)
MSSQ-CCP	1 15/16	(1.937)
MSSQ-CCP R/A	2 1/2	(2.500)
MSSQ-CCR	1 3/4	(1.750)
MSSS-CCP	3 1/2	(3.500)

Under ideal conditions, the life expectancy of SEA CON® Metal Shell Series Connectors when fabricated of 316 stainless steel is approximately five to ten years. The life expectancy of SEA CON® Metal Shell Series Connector when fabricated of 6061 aluminum and anodized (hard black) is double that of the stainless steel connector if the connector surface remains undamaged. When scratched or dented (when the anodized coating becomes chipped), the life expectancy of the aluminum connector is about half that of the stainless steel connector. This remains true for connectors operating at 8000 psi in salt water.

The standard cable used with these connectors is Type SO oil resistant (synthetic rubber-neoprene jacket). The life expectancy of this cable type is approximately ten years.

PENETRATORS

TYPE OF CONNECTORS	MAX. CABLE O.D.	
NPT 1/2” HP	3/4	(.750)
NPT 1/2” HP R/A	3/4	(.750)
NPT 1/2” LP	1/2	(.500)
NPT 3/4” HP	3/4	(.750)
NPT 3/4” HP R/A	3/4	(.750)
NPT 3/4” LP	3/4	(.750)
NPT 1” HP	1	(1.000)
NPT 1” HP R/A	1	(1.000)
NPT 1” LP	7/8	(.875)

MINI-CON™ SERIES

TYPE OF CONNECTORS	MAX. CABLE O.D.	
MING-CCP	9/16	(.562)
MING-CCP R/A	5/8	(.625)
MING-CCR	9/16	(.562)-CCP MOLD
MINK-CCP	7/8	(.875)
MINK-CCP R/A	5/8	(.625)
MINK-CCR	7/8	(.875)-CCP MOLD
MINK-FCR-HP SIDE	3/8	(.375)
MINK-FCR-HP SIDE R/A	1/2	(.500)
MINL-CCP	1	(1.000)
MINL-CCP R/A	5/8	(.625)
MINL-CCR	1	(1.000)-CCP MOLD
MINM-CCP	3/4	(.750)
MINM-CCP R/A	3/4	(.750)
MINM-CCR	3/4	(.750)-CCP MOLD
MINO-CCP	1 1/4	(1.250)
MINO-CCP R/A	3/4	(.750)
MINO-CCR	1 1/4	(1.250)-CCP MOLD
MINP-CCP	1	(1.000)
MINP-CCP R/A	27/32	(.843)
MINP-CCR	1	(1.000)
MINP-PNT-HP SIDE		
MINQ-CCP	1 1/4	(1.250)
MINQ-CCP R/A	7/8	(.875)
MINQ-CCR	1 1/4	(1.250)-CCP MOLD
MINR-CCP	1 1/4	(1.250)
MINR-CCP R/A	1	(1.000)
MINR-CCR	1 1/4	(1.250)-CCP MOLD
MINS-CCP	1 3/8	(1.375)
MINS-CCP R/A	1 1/8	(1.125)
MINS-CCR	1 3/8	(1.375)-CCP MOLD
MINT-CCP	1 1/2	(1.500)
MINT-CCP-R/A	1 1/4	(1.250)
MINT-CCR	1 1/2	(1.500)-CCP MOLD
MINU-CCP	1 11/16	(1.687)
MINU-CCP R/A	1 3/8	(1.375)
MINU-CCR	1 11/16	(1.687)-CCP MOLD

RUBBER MOLDED CONNECTOR SERIES

List of the max. O.D. of the cable for the rubber and polyurethane molding connectors

TYPE OF CONNECTORS	MAX. CABLE O.D.	
RMA-VMA	7/32	(.218)
RMA-VMA R/A	1/4	(.250)
RMF	5/16	(.312)
RMF-R/A	5/16	(.312)
VMF	3/8	(.375)
VMF R/A	7/16	(.437)
RMG-VMG-LMG	5/8	(.625)
RMG-VMG-LMG-R/A	11/16	(.687)
RMG-VMG-LMG	1/2	(.500)
RMG-VMG-LMG	11/16	(.687)
RMK-VMK	3/4	(.750)
RMK-VMK R/A	3/4	(.750)
RMK-VMK-WOC	3/4	(.750)

CONNECTOR TERMINOLOGY

AW	ALL WET™ (Underwater Mateable)
BC	Bulkhead Connector
BCL	Bulkhead Connector Locking Sleeve Thread
BCP	Bulkhead Connector Plug
BCR	Bulkhead Connector Receptacle
BCRL	Bulkhead Connector Receptacle (Long MINI-CON™)
BH	Bulkhead Connector
CCP	Cable Connector Plug
CCR	Cable Connector Receptacle
CIP	Connector Insert Plug
CIR	Connector Insert Receptacle
D	Delrin
DC	Dummy Connector
DE	Double Ended
DSP	Dummy Sealing Plug For Receptacle
DSR	Dummy Sealing Receptacle
FAW	Flat ALL WET™ (Underwater Mateable)
FI	Field Installable
FCR	Flange Connector Receptacle
FLS	Female Locking Sleeve
FO	Fiber Optic
FS	Rubber Molded Female Socket Connector
GRE	Glass Reinforced Epoxy
HC	Hermaphroditic Connector
HP	High Pressure
HPS	High Pressure Side
IDC	Inboard Disconnect Connector
LM	Rubber Molded (Unique)
LP	Low Pressure
LPS	Low Pressure Side

CONNECTOR TERMINOLOGY

MAW	Miniature ALL WET™ Connector (Underwater Mateable))
MIN	Miniature Series Connector
MLS	Male Locking Sleeve
MP	Rubber Molded Male Pin Connector
MSA	Metal Shell Aluminum Connector (Series)
MSS	Metal Shell Stainless Connector
N/W	Nut/Washer
-P	Pigtails On LPS Of Bulkhead Connector
PBC	Pigtail Bulkhead Connector
PBCL	Pigtail Bulkhead Connector Locking Sleeve Thread
PBCLM	PBCL Modified
PBOF	Pressure Balanced Oil Filled
PLP	Pins On Low Pressure Side
PSP	Plastic Splash-Proof Plug For Receptacle
PSR	Plastic Splash-Proof Receptacle For Plug
RA	Right Angle
RM	Rubber Molded
S OR SS	Stainless Steel
SC	Solder Cup Or Stress Core (Depending On Connectors)
SL	Slip On Series (Rubber Molded)
SP	Special (Designates A Non-Standard Feature)
SW	Self Wiping
V	Inverted
VM	(Inverted) Rubber Molded Connector
VMSS	(Inverted) Metal Shell Stainless
VMSA	(Inverted) Metal Shell Aluminum
VMIN	(Inverted) Miniature Series Connector
VS	(Inverted) Glass Reinforced Epoxy
WOC	Rubber Molded Connector Without Cable
XS	Glass Reinforced Epoxy Connector

CONNECTOR SERIES SHELL SIZES

LISTED IN ORDER OF SIZE: SMALL TO LARGE DIAMETER

AW		L, M, O, Q
MIN		G, K, L, M, O, P, Q, R, S, T, U, X
MSS		G, K, L, M, O, P, Q, R, S
LM		G
RM		A, F, G, K
VM		A, F, G, H, K
XS	BC/BCL	A,B, C, F, G, K
VS	BC/BCL	A, B, F, G, H, K
XS	BCR	J, E, EE, L, M, R, Q

FIBER OPTIC TERMINOLOGY / DEFINITIONS

SM	Single Mode
MM	Multi Mode
FDDI	Fiber Distributed Data Interface
OFNR	Optical Fiber Non-Conductive Riser
OFNP	Optical Fiber Non-Conductive Planum
PCS	Plastic Clad Silica

Attenuation: Loss of signal power. Attenuation is typically measured in decibels per kilometer (dB/km) at a specific wavelength.

Bandwidth: Potential information carrying capacity, the amount of information that can be sent over a communication channel, increases with the frequency.

Bend Radius: Radius a fiber can bend before the risk of breakage or increase in attenuation.

Buffering: A protective material extruded directly on the fiber coating to protect it from the environment.

Cable Assembly: Fiber Optic cable that has connectors on one or both ends.

Cladding: The material surrounding the core of an optical waveguide. The cladding should have a lower index of refraction in order to steer the light in the core.

Coating: A material put over the cladding, during the drawing process, to protect the fiber from the environment.

Core: The central region of a fiber through which light is transmitted.

Decibal (dB): The unit for measuring the relative strength of a signal.

Dispersion: The spreading of light pulses as they travel down the fiber.

Fresnal Reflection Losses: Reflection losses incurred at input and output of optical elements due to the difference in refractive index between glass and the immersion medium.

Graded Index Fiber: Fiber design of optical fiber having a core refractive index that decreases almost parabolically and radially outward toward the cladding.

Index of Refraction: The ratio of light velocity in a vacuum to its velocity in a given transmitting medium.

Jumper Assembly: A cable assembly with connectors attached on both ends.

Micron (pm): Micrometer; one millonth of a meter.

Mode: A term used to describe a light path through a fiber.

Modulation: Coding of information onto the carrier frequency. This includes amplitude, frequency, or phase.

Multimode Fiber: An optical waveguide in which light travels in multiple modes.

Numerical Aparture: The number that expresses the light gathering power of a fiber.

Pigtail: A cable assembly with connectors at one end.

Scattering: A property of glass which causes light to deflect from the fiber and contributes to losses.

Singlemode Fiber: An optical waveguide in which only the lowest-order bound mode, which may consist of a pair of orthogonally polarized fields, can optical propagate at the wavelength of interest.

Step-Index Fiber: Optical Fiber which has an abrupt change in its refractive index, due to a core and cladding that have different indices of refraction. Typically used for singlemode.

Tight Buffer: A type of cable construction where each fiber is lightly buffered by a protective thermo-plastic coating to a diameter of 900pms.

Wavelength: The distance between crests of a waveform.