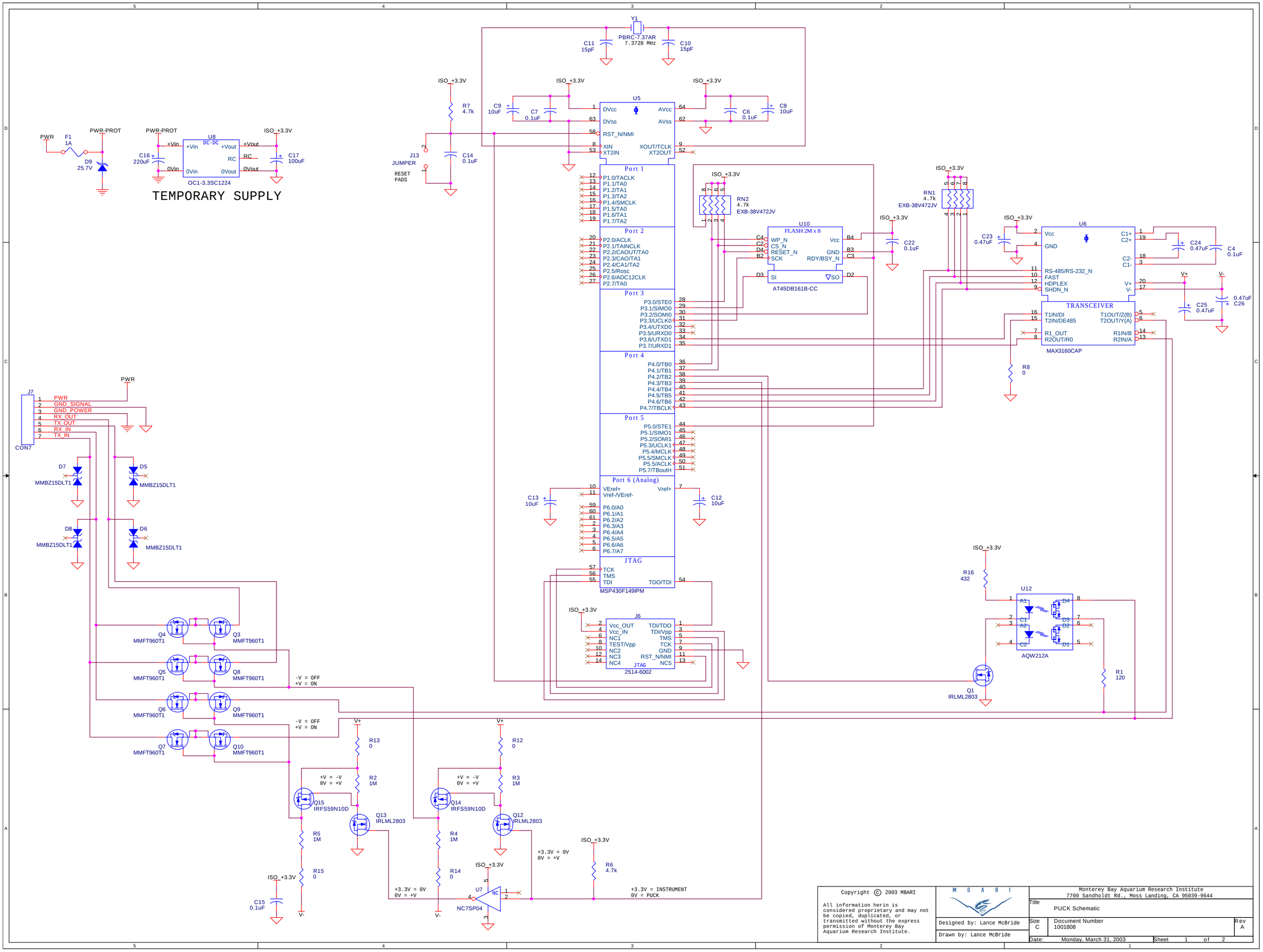

Copyright © 2003 MBARI

All information herin is considered proprietary and may not be copied, duplicated, or transmitted without the express permission of Monterey Bay Aquarium Research Institute.

Monterey Bay Aquarium Research Institute
7700 Sandholdt Rd., Moss Landing, CA 95039-9644

Title: PUCK Schematic

Designed by: Lance McBride
Drawn by: Lance McBride

Size: C
Document Number: 1001808
Rev: A

Date: Monday, March 31, 2003
Sheet 1 of 2

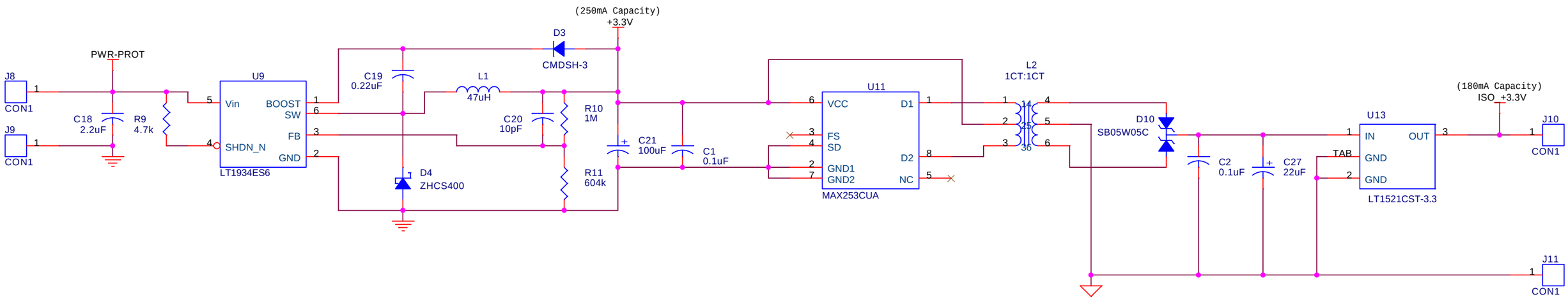

PUCK Power Supply

Copyright © 2003 MBARI

All information herin is considered proprietary and may not be copied, duplicated, or transmitted without the express permission of Monterey Bay Aquarium Research Institute.

Designed by: Lance McBride

Drawn by: Lance McBride

Monterey Bay Aquarium Research Institute
7700 Sandholdt Rd., Moss Landing, CA 95039-9644

Title: PUCK Schematic

Size: B

Document Number: 1001808

Rev: A

Date: Wednesday, April 02, 2003

Sheet 2 of 2