THE INFORMATION CONTAINED IN THIS DRAWING IS THE SOLE PROPERTY OF MBARI ANY REPRODUCTION IN PART OR WHOLE WITHOUT THE WRITTEN PERMISSION OF MBARI IS PROHIBITED.

REVISIONS			
REV.	DESCRIPTION	DATE	APPROVED
	INITIAL RELEASE	X/XX/01	J.E.
A	LENGTHEN FOR MMC-6DPA BACKPLANE	9/16/03	J.E.

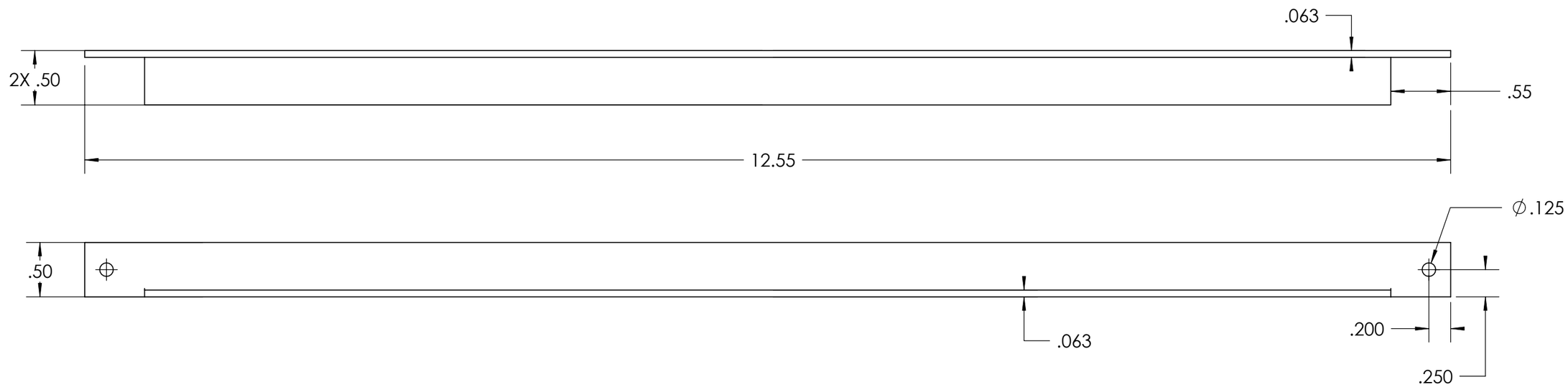

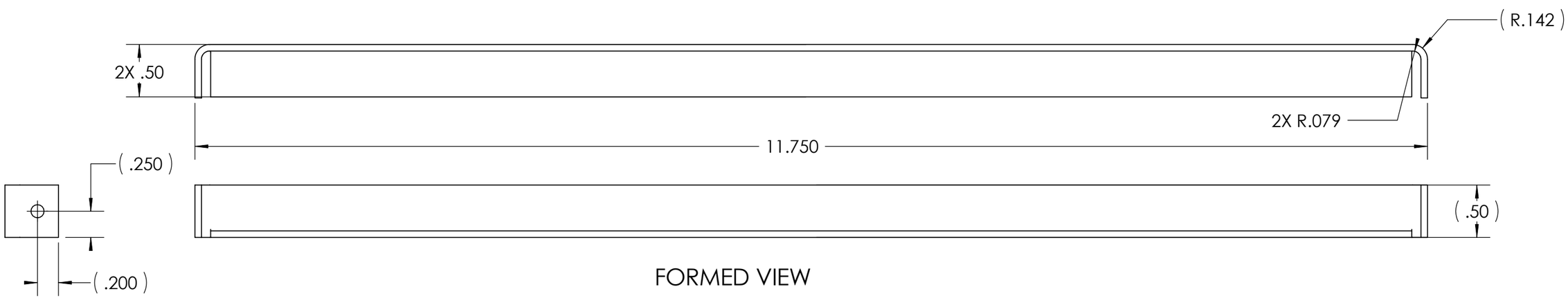

FORMED VIEW

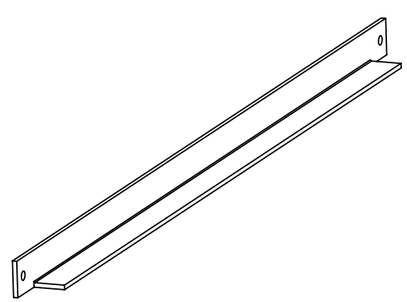

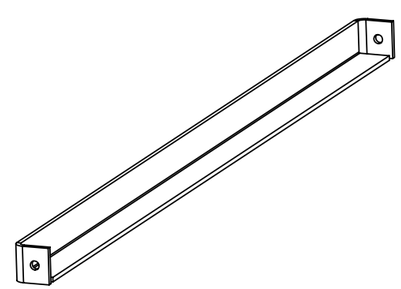

8. DO NOT ANODIZE
7. PART SYMMETRIC BOTH ENDS

NOTES: (CONT. FROM TITLE BLOCK)

ITEM NO.	QTY.	PART NO.	DESCRIPTION	VENDOR	MATERIAL SPECIFICATION
1	1		1/2 X 1/2 X 1/16 ALUM ANGLE		6063-T3511 ALUM.

BILL OF MATERIALS

Shop / Q.C.	
Inspector	
Shop Foreman	
Engineer	
NEXT ASSY Description	NEXT ASSY Number
Application	

UNLESS OTHERWISE SPECIFIED TOLERANCES ARE:

1 PLACE DIM ±1/16	2 PLACE DIM ±.02	3 PLACE DIM ±.005	ANGLES ±1°

1. DIMENSIONS ARE IN INCHES
2. DIMENSION LIMITS HELD AFTER PLATING.
3. REMOVE BURRS AND SHARP EDGES .015 MAX.
4. MACHINED FILLET RADII .0150-.030.
5. MACHINED DIAMETERS ON A COMMON CENTERLINE CONCENTRIC WITHIN .005
6. PERPENDICULARITY & PARALLELISM OF MACHINED SURFACES .002 PER INCH. MAX .012 INCHES FOR SINGLE SURFACE.

DO NOT SCALE DRAWING

APPROVALS		DATE
DRAWN	J. ERICKSON	1/17/03
ENGINEER	J. ERICKSON	1/17/03
CHECKED		
PROJECT NO.	600029	
PROJECT	NEW MOORING CONTROLER	
WEIGHT	ZZ	

Monterey Bay Aquarium Research Institute
MBARI
7700 Sandholdt RD.
Moss Landing, CA 95039
PH: (831) 775-1700

NMC / OASIS CONTROLER
IBC_Card Lock

SIZE	DWG. NO.	REV.
B	1001786.DWG	

SCALE 1:1 | CAD FILE: MECH ENG ON TORNADO | SHEET 1 OF 1