THE INFORMATION CONTAINED IN THIS DRAWING IS THE SOLE PROPERTY OF MBARI ANY REPRODUCTION IN PART OR WHOLE WITHOUT THE WRITTEN PERMISSION OF MBARI IS PROHIBITED

REVISIONS			
REV.	DESCRIPTION	DATE	APPROVED
	INITIAL RELEASE	4/3/02	J.E.
A	CHG OUTSIDE DIM'S, ADDED TOL.	6/6/02	J.E.
B	CHG MAT'L THICKNESS & WELL DEPTH. ADDED 1/4-20 TAP'D HOLE	9/24/02	J.E.

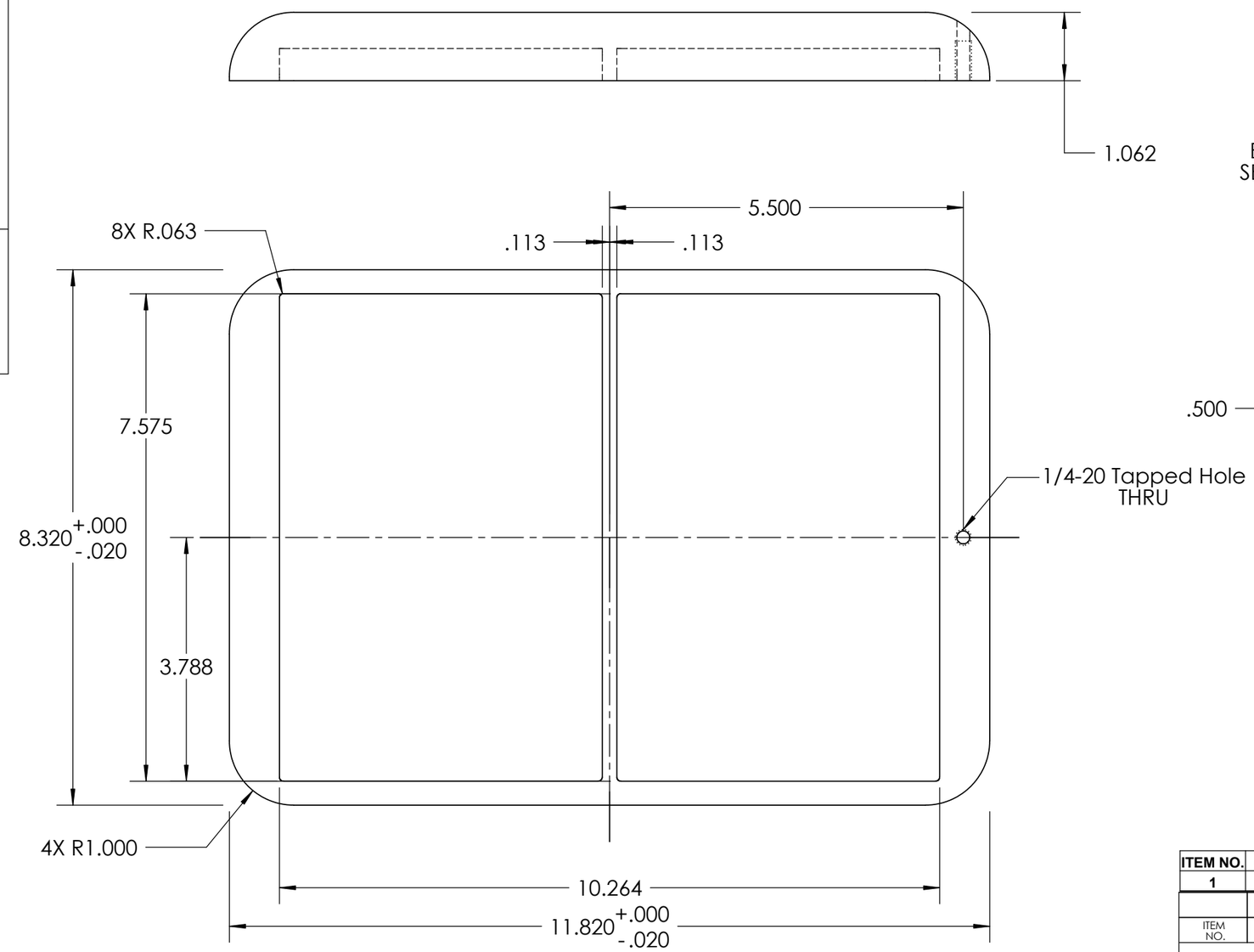

BROKEN-OUT SECTION VIEW

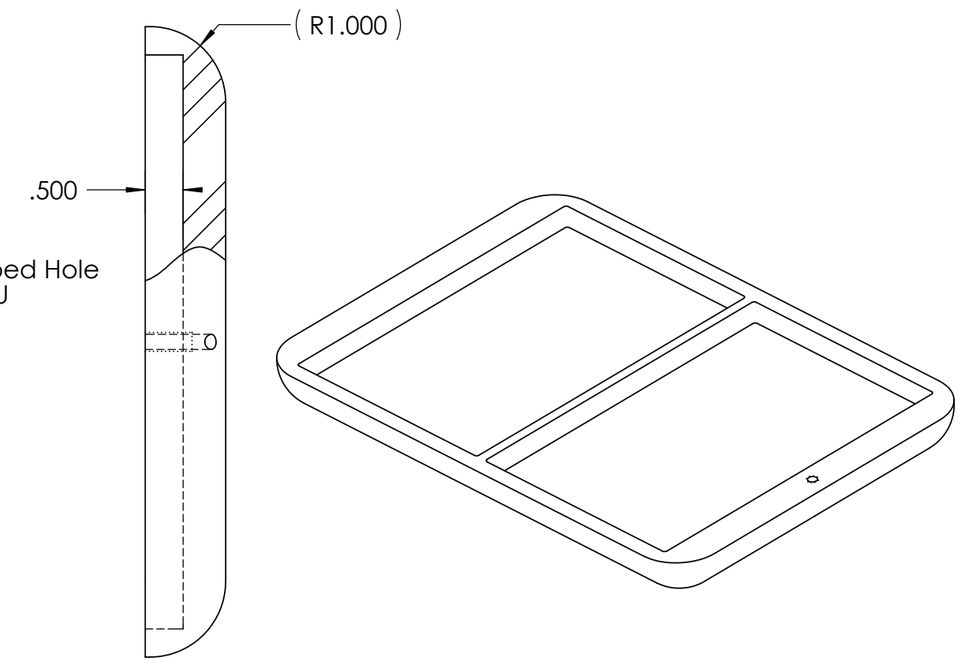

ITEM NO.	QTY.	DESCRIPTION	PART NUMBER	VENDOR	MATERIAL
1	1	Batt_Base_V2	1002071		UHMW P.E.

ITEM NO.	QTY.	PART NO.	DESCRIPTION	VENDOR	MATERIAL SPECIFICATION

BILL OF MATERIALS

Shop / Q.C.	
Inspector	
Shop Foreman	
Engineer	
NEXT ASSY Description	NEXT ASSY Number
Application	

UNLESS OTHERWISE SPECIFIED TOLERANCES ARE:

1 PLACE DIM ±1/16	2 PLACE DIM ±.02	3 PLACE DIM ±.005	ANGLES ±1°

1. DIMENSIONS ARE IN INCHES
2. DIMENSION LIMITS HELD AFTER PLATING.
3. REMOVE BURRS AND SHARP EDGES .015 MAX.
4. MACHINED FILLET RADII .0150-.030.
5. MACHINED DIAMETERS ON A COMMON CENTERLINE CONCENTRIC WITHIN .005
6. PERPENDICULARITY & PARALLELISM OF MACHINED SURFACES .002 PER INCH. MAX .012 INCHES FOR SINGLE SURFACE.

DO NOT SCALE DRAWING

APPROVALS	DATE
DRAWN J. ERICKSON	8/27/03
ENGINEER J. ERICKSON	8/27/03
CHECKED F.S.	8/29/03
PROJECT NO. 600027	
PROJECT MOOS	
WEIGHT	

Monterey Bay Aquarium Research Institute
MBARI
7700 Sandholdt RD.
Moss Landing, CA 95039
PH: (831) 775-1700

MOOS MOORING BUOY
Batt_Base_V2

SIZE	DWG. NO.	REV.
B	1002071.DWG	B

SCALE 1:2 | CAD FILE: MECH ENG ON TORNADO | SHEET 1 OF 1

NOTES: (CONT. FROM TITLE BLOCK)