NOTES:
1. DO NOT SCALE FROM DRAWING
2. MATERIAL: 316L SST
3. MBARI TO MODIFY PART FOR O-RING LEADS.
4. MBARI TO MARK OR TAG WITH PART NUMBER.

REVISION			
REV.	DESCRIPTION	DATE	APROVED
A	CO 7627 - INITIAL ISSUE		

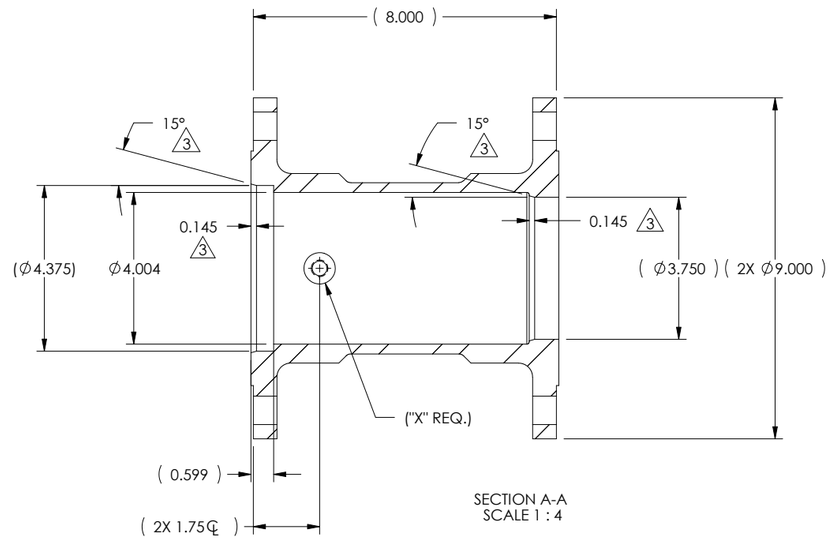

SECTION A-A
SCALE 1 : 4

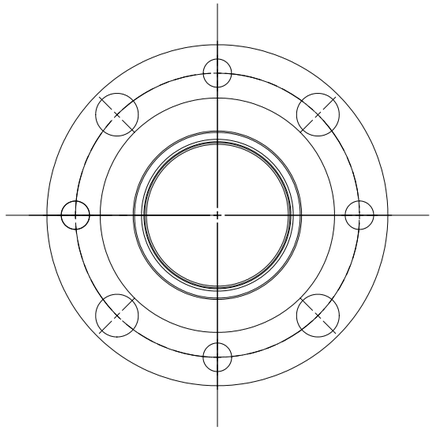

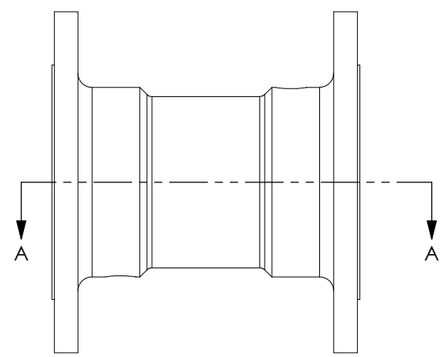

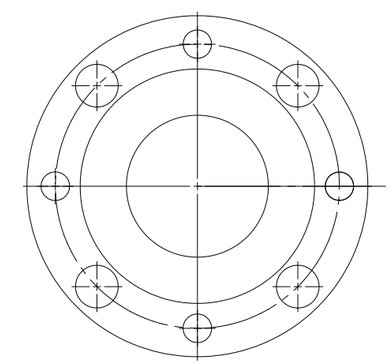

1033597	OPM-210-06-2	SPLICE TUBE - LOWER	YES
1033598	OPM-210-06-1	SPLICE TUBE - UPPER	NO
P/N	REF P/N	PART DESCRIPTION	"X"

ALL DATA AND INFORMATION CONTAINED OR DISCLOSED BY THIS DOCUMENT IS CONFIDENTIAL AND PROPRIETARY INFORMAION OF OCEAN DESIGN, INC. AND ALL RIGHTS THEREIN ARE EXPRESSLY RESERVED. BY ACCEPTING THIS MATERIAL, THE RECIPIENT AGREES THAT THE MATERIAL AND THE INFORMATION CONTAINED THEREIN IS HELD IN CONFIDENCE AND IN TRUST AND WILL NOT BE USED, COPIED, REPRODUCED IN WHOLE OR IN PART UNLESS WRITTEN APPROVAL BY OCEAN DESIGN, INC. IS OBTAINED, NOR ITS CONTENTS REVEALED IN ANY MANNER TO OTHERS, EXCEPT TO MEET THE SPECIFIC PURPOSE FOR WHICH IT WAS DELIVERED

UNLESS OTHERWISE SPECIFIED DIMENSIONS ARE IN INCHES.
TOLERANCES ARE:
ANGLES: ± 1/2°
FRACTIONS ± 1/64
DECIMALS ± .X = .05
± .XX = .01
± .XXX = .003
CONCENTRICITY .004 TIR
SURFACE FINISH 63
BREAK EXTERNAL CORNERS R.005
INTERNAL CORNERS R.02 MAX
THIRD ANGLE PROJECTION

CONTRACT NO		
APPROVALS		DATE
DRAWN	G.L.C.	03/12/04
CHECKED		
ENGR	J.K.T.	03/12/04

OCEAN DESIGN, INC.
www.oceandesigninc.com

TITLE
MOOS MOURING BUOY
SPLICE TUBE
SOURCE CONTROL DRAWING

SIZE	CAGE CODE	DOC. NO.	REV
B	0VV88	60954	A

SCALE	PART NO.	SHEET 1 OF 1	SW
1:2	SEE TABLE		
	REF. NO. OPM-210-06-TAB		