NOTES:

REV.	CHANGE	INIT.	DATE

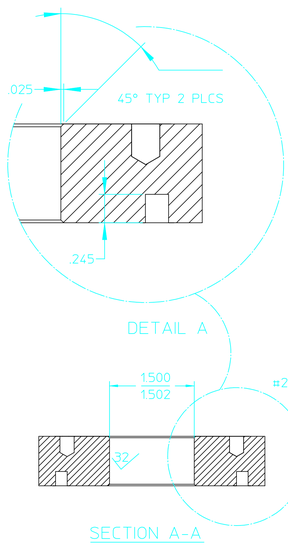

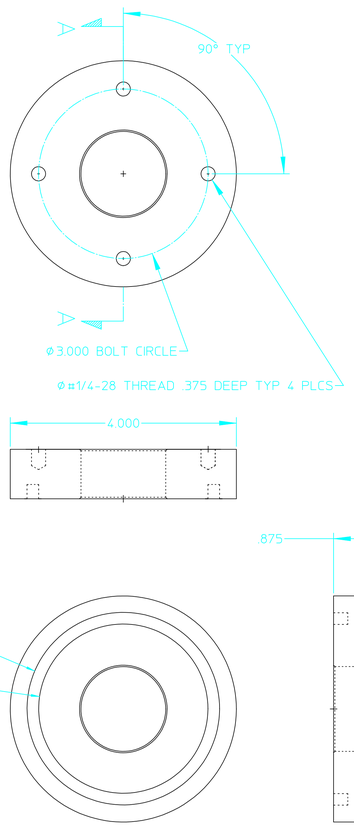

PENETRATOR BULKHEAD

MATERIAL: 6061 T6 AL

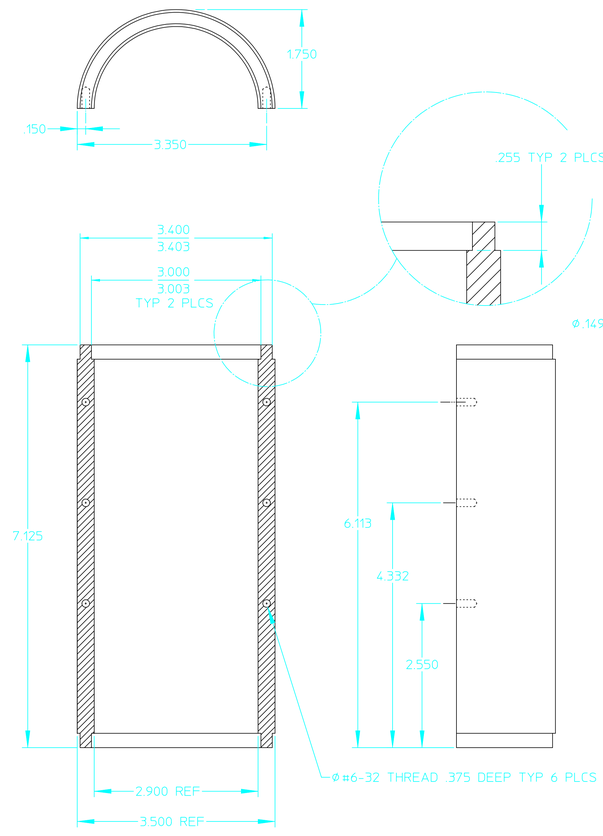

SPLICE SUPPORT

MATERIAL: 6061 T6 AL

SCHEDULE 80 AL PIPE 3.5"OD 2.9"ID

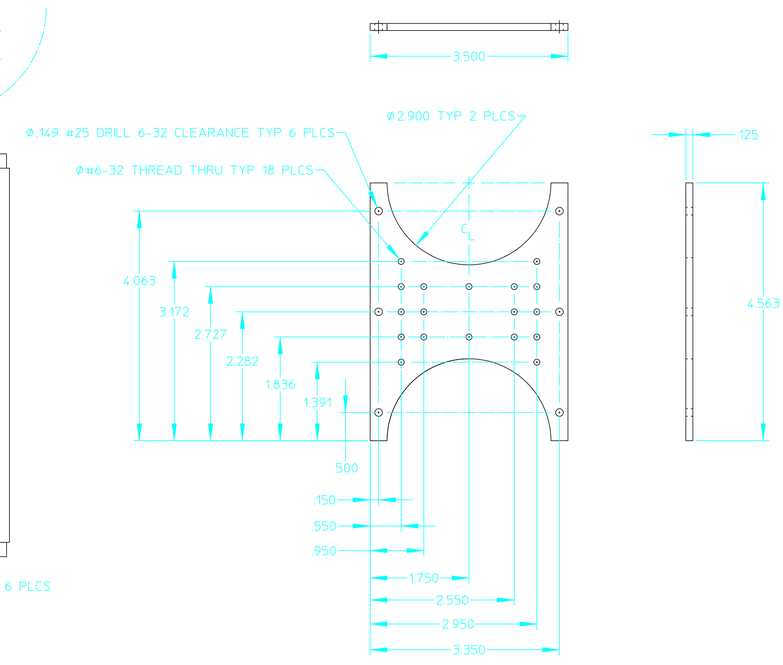

SPLICE PLATE

MATERIAL: 6061 T6 AL

© MBARI 2002

DO NOT PLATE

PAGE 21

Revision History
1.0 - 17OCT02 Initial drawing.
1.1 - 28OCT02 Post CDR release.

-101	DETAIL NO.	-101 FINAL ASSEMBLY DESCRIPTION	MAT'L	ZONE

TOLERANCES UNLESS SPECIFIED OTHERWISE
DO NOT SCALE
UNITS INCHES - DEGREES

FRACTIONS - +/- 1/16
.X - +/- .1
.XX - +/- .01
.XXX - +/- .005
∠ - +/- .5°

DRAWN BY: Mark Chaffey DATE: 10/28/02
ENGINEER: DATE:
CHECKED: DATE:
APPROVED: DATE:
APPROVED: DATE:
FILENAME: SNUBBER ASSEMBLY CARTOON ME10

MBARI
7700 SANDHOLDT ROAD
MOOS LANDING CA 95039

DRAWING TITLE:
MOOS MOORING TERMINATIONS

DRAWING NUMBER: 101681DWG-1.1 REV. SHEET: 21 of 25