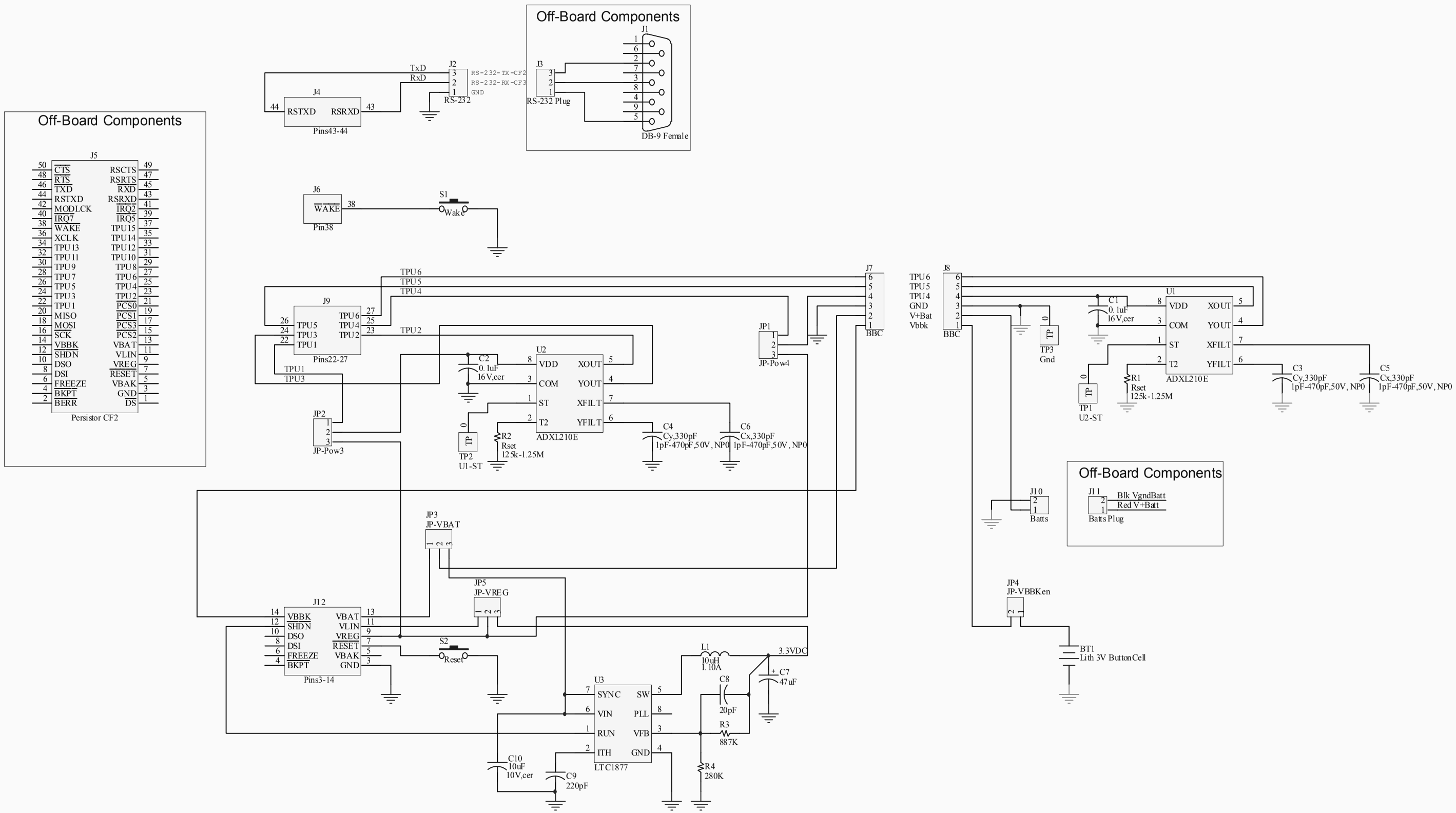

Title:	MOOS Dual-Axis Accelerometers
Engineer:	Mark Sibenac
Checked:	Andy Hamilton
Part No.:	1002313 — Rev: 1
Sheet:	1 of 1 — Date: 16-Feb-2004
V:\Schematics\Accelerometers\Accel.SchDoc	

MBARI 1-831-775-1700