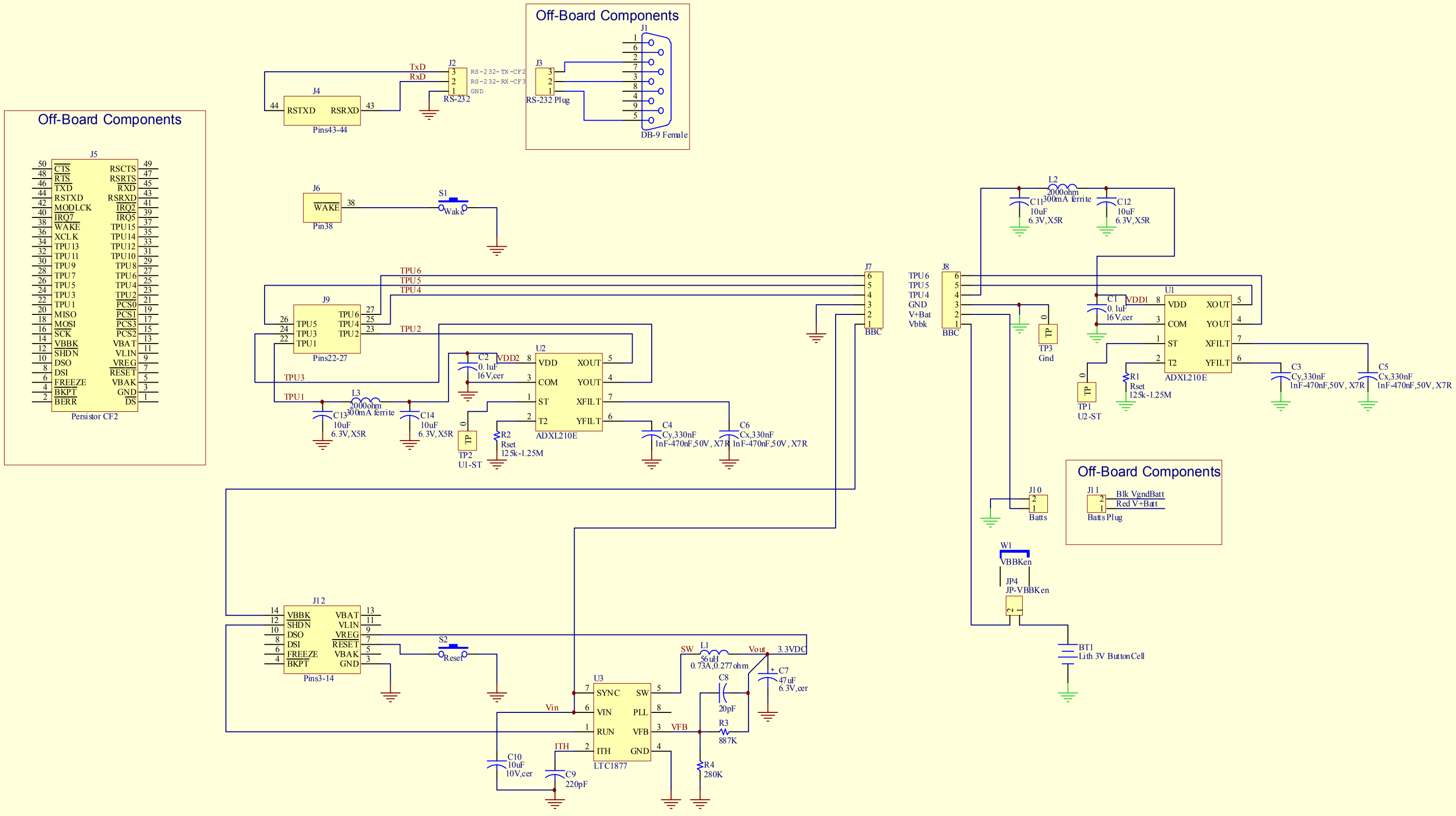


| | |
|---|---|
| Title: | MOOS Dual-Axis Accelerometers |
| Engineer: | Mark Sibenac |
| Checked: | Andy Hamilton |
| Part No.: | 1002313 — Rev: 1 |
| Sheet: | 1 of 1 — Date: 20-Feb-2004 |
| V:\Schematics\Accelerometers\Accel.SchDoc | |

MBARI 1-831-775-1700